# Silicon Project at RIKEN

RIKEN/RBRC
Itaru Nakagawa

# Contents

- RIKEN’s Responsibility in VTX project
- Infrastructure (Clean Room, Devices, Man Power)
- Assembly Details
- Time Scale VTX vs. NCC

# RIKEN's Responsibility in VTX

RIKEN

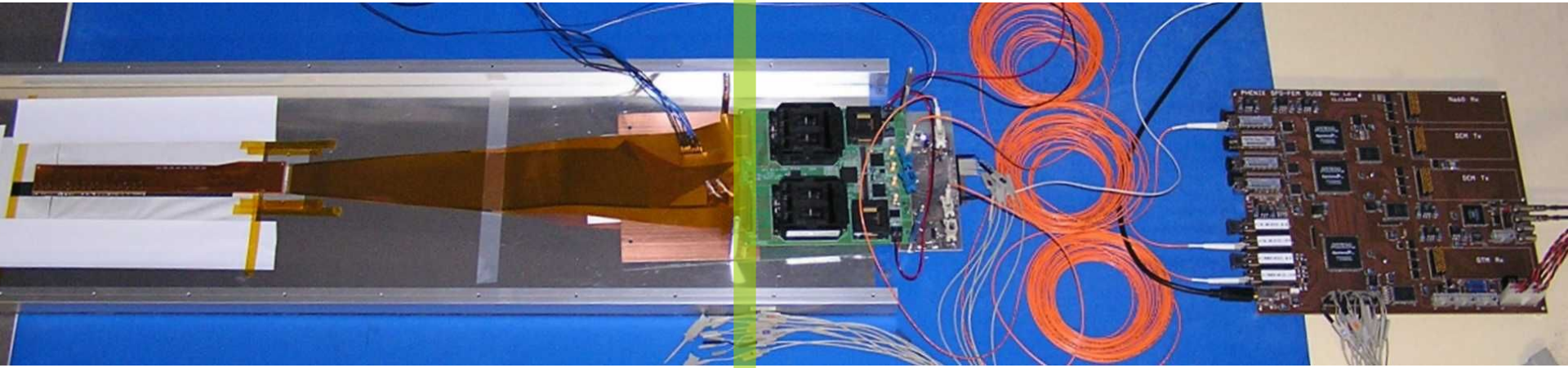

1. PIXEL (Sensor, Bas, Assembly)
2. Silicon Strip (Sensor R&D 、 QA)

# Flow Chart of Pixel Ladder Fabrication

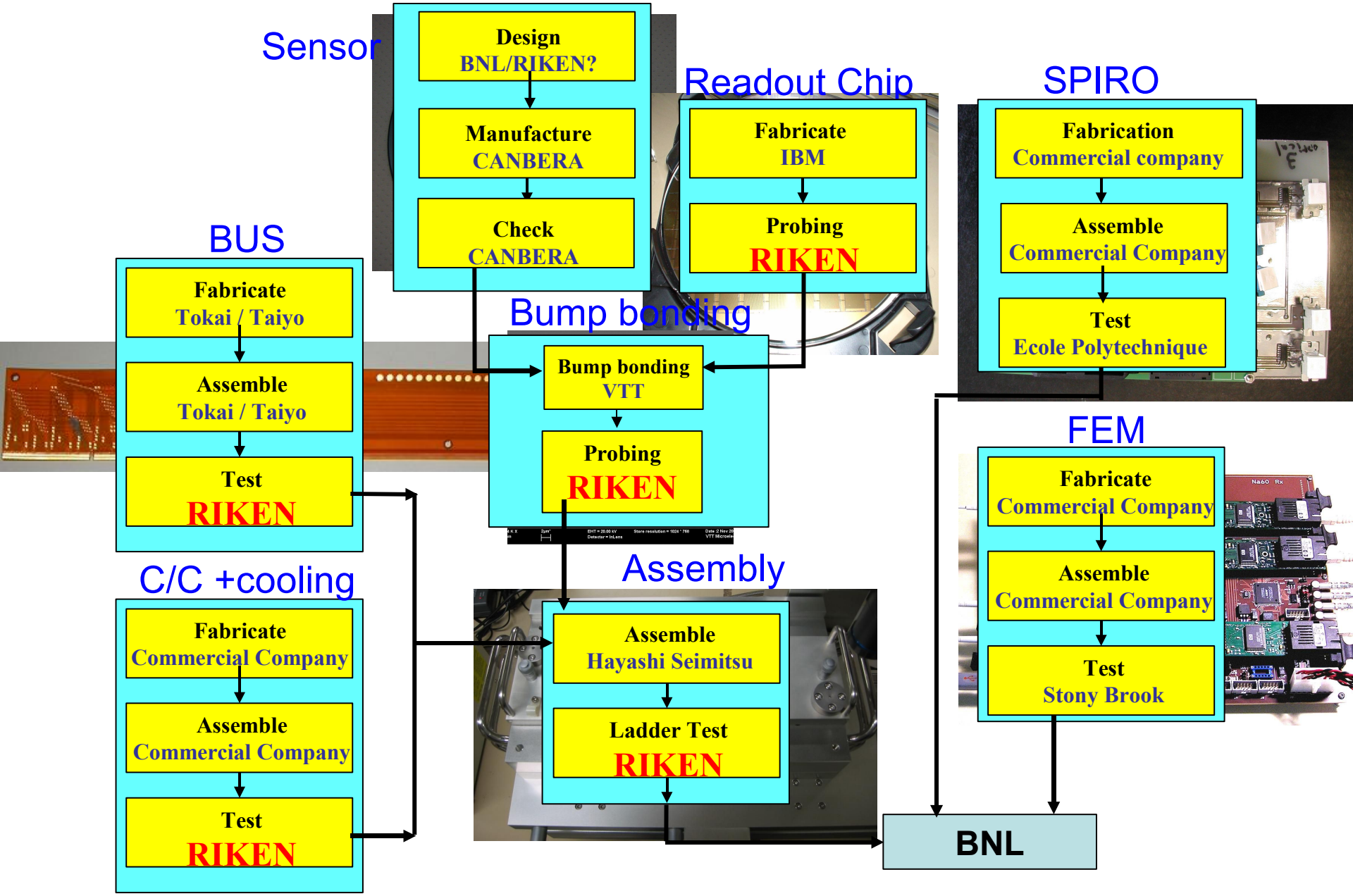

# Silicon Strip

- R & D Sensor design
- Production at Hamamatsu Co.
- QA at RBRC
- Test Readout / Spacial Resolution
- (Before) prototype assembly at Hayashi-Seimitsu

Tojo & Asai

# Infrastructure @ RIKEN

- Clean ROOM
- Equipments/Devices
- Man Power

# Clean Room @ RIKEN (1)

CLASS 1000

# Clean Room @ RIKEN (2)

Area : 16.7 $m^2$

# Clean Room @ RIKEN (3)

# QA Capability

- Probe Station

**Probe station setup**

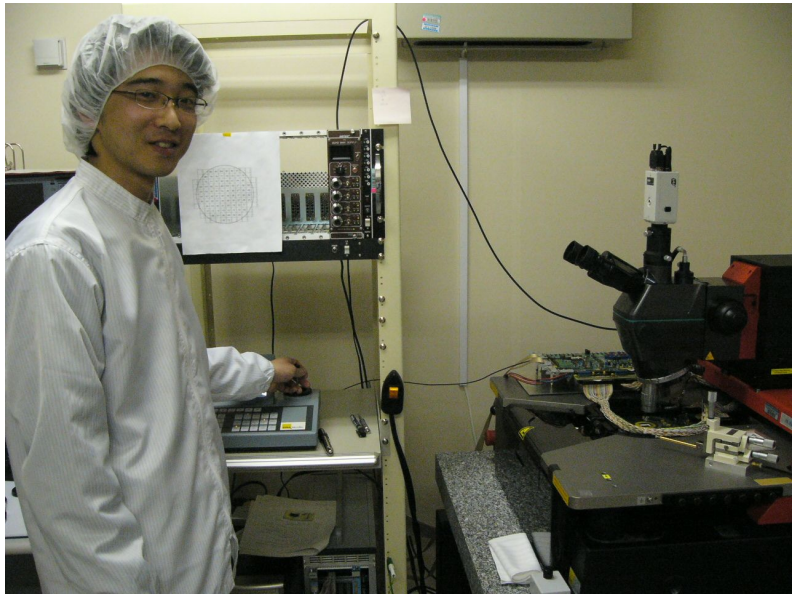

# Hardware Devices @ RIKEN

- Assembly
  - Arignment JIG
  - Glue Dispenser Robot
  - ３ D Vision Measurement Ma
  - Wire Bonding Machine (Located
    Hayashi-Seimitsu Co.)

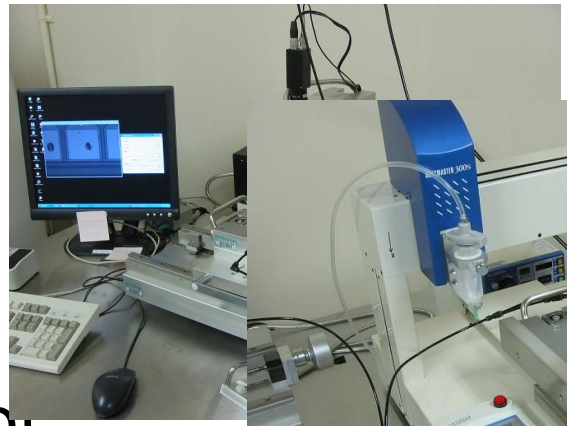

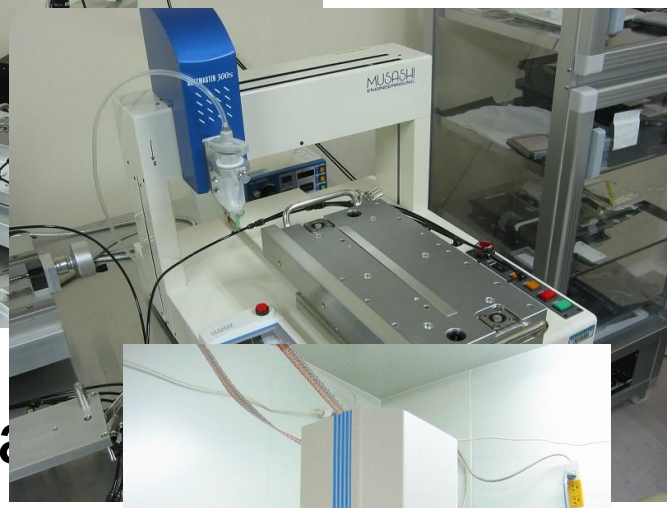

# Man Power (VTX Project )

7.6 Full Time Expert

- Tenure
  - **Atsushi Taketani**
  - Yasuyuki Akiba
  - Yuji Goto
  - Hideto Enyo
- Postdoc
  - Junji Tojo
  - Hiroaki Onishi
  - Hiroyuki Kano
  - **Junkichi Asai**
  - **Masaki Kurosawa**
  - **Ryo Ichimiya**
  - **Yoshiyuki Onuki**
- Student
  - Manabu Togawa (Kyoto)
  - Kogo Miho (Tokyo Metro College of Aeronautical Engineering)
  - Yasukichi Inoue (Rikkyo)
  - **Kouhei Fujiwara (Niigata)**
  - **Kouichi Sakashita (TIT)**
- Domestic Collaborators
  - Kazu Kurita (Rikkyo)
  - Michiko Sekimoto (KEK)
  - Watanabe (Tokyo Metro College of Aeronautical Engineering)
- Technician

New team with similar scale needs to be formed for NCC

# Assembly Details

# How to align

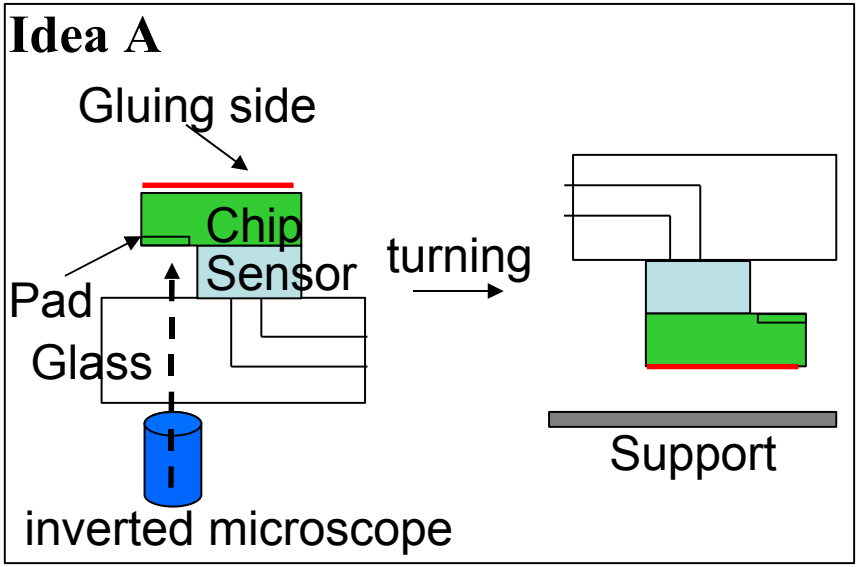


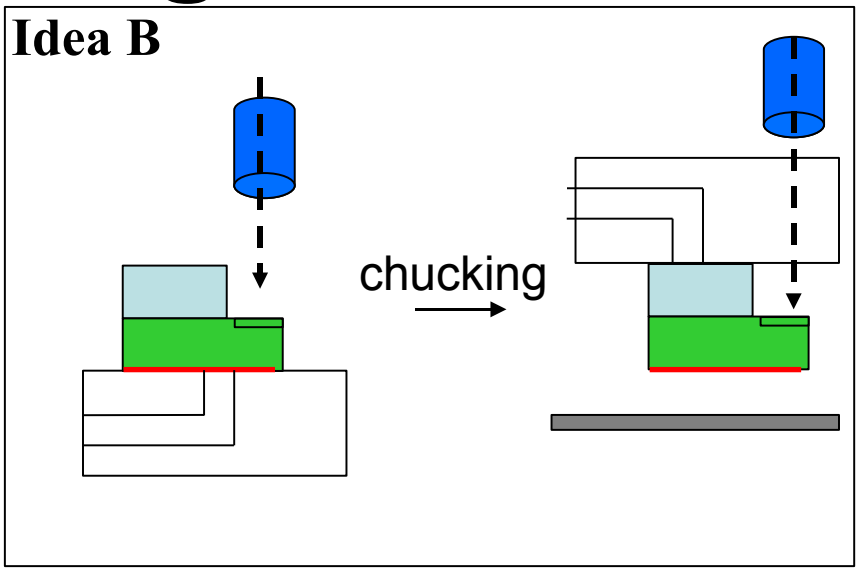


| | Idea A | Idea B |
|---|---|---|
| Merit | No chucking side change | Normal microscope |
| Demerit | Need inverted microscope | Need turning upside down when gluing => Might be slip when turning |

We might have to confirm no slip with microscope after the alignment.

I'll talk under the assumption **Idea A** is adopted

# Sensor alignment jig A

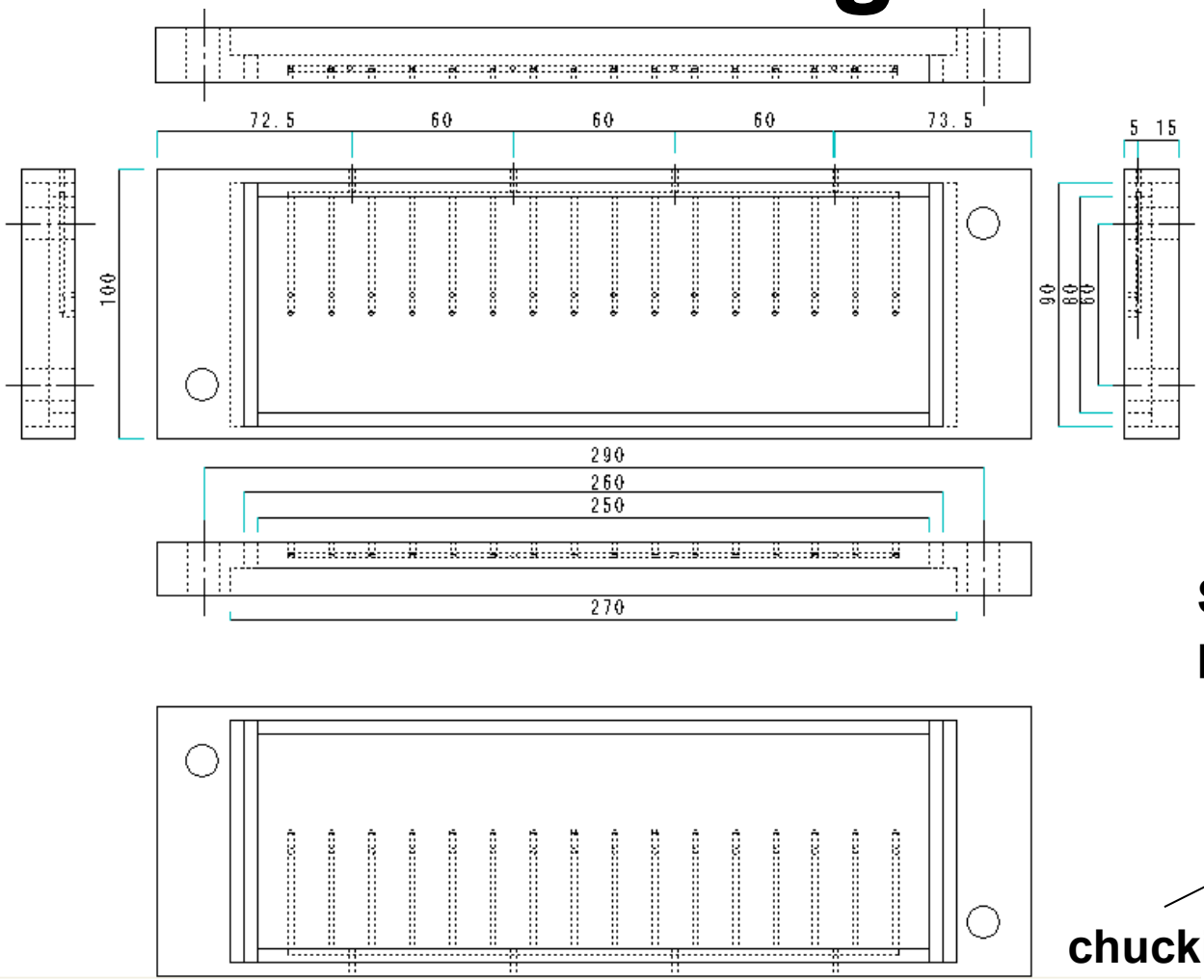

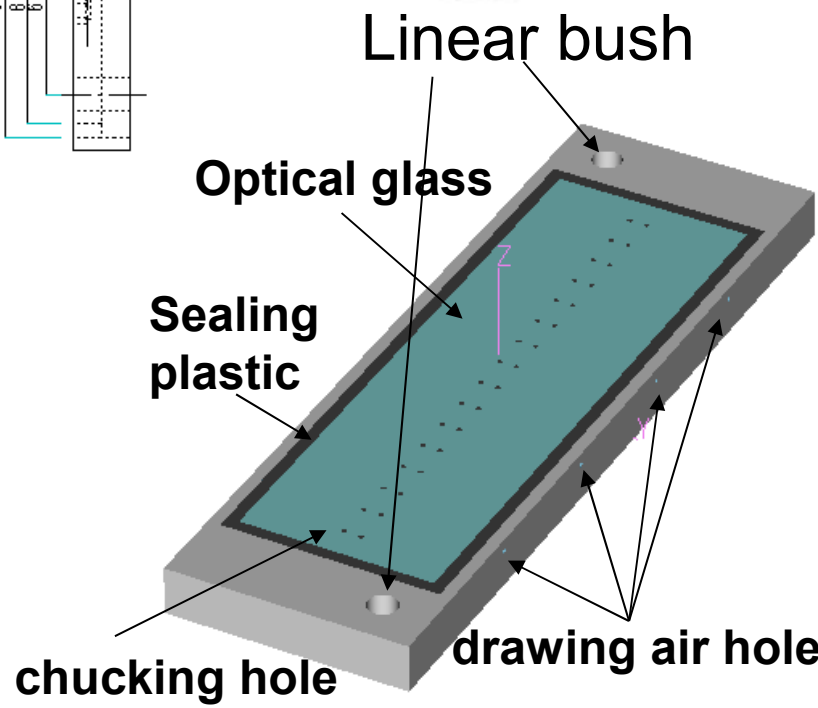


We can achieve the position determination about $r_{Int} - r_{ext}$ ~ **4,5μm** with linear bush.

# Alignment

Linear bush:

Linear ball bearing inside in the shell structure

- Relative position between jigs is determined by linear bush and pin at <5μm accuracy in order to assemble stave at <25μm precision.
- Jigs have a flexibility for modification of the component.
- Detailed and quantitative procedures to keep good uniformity and reproducibility

1. Set the sensors
2. Set the XYθ–stage
3. Align 1st sensor
4. Align 2nd sensor
5. Align 3rd sensor
6. Align 4th sensor
7. Take out XYθ–stage and slide
8. Set the Turn-jig and chucking
9. Take out Turn-jig

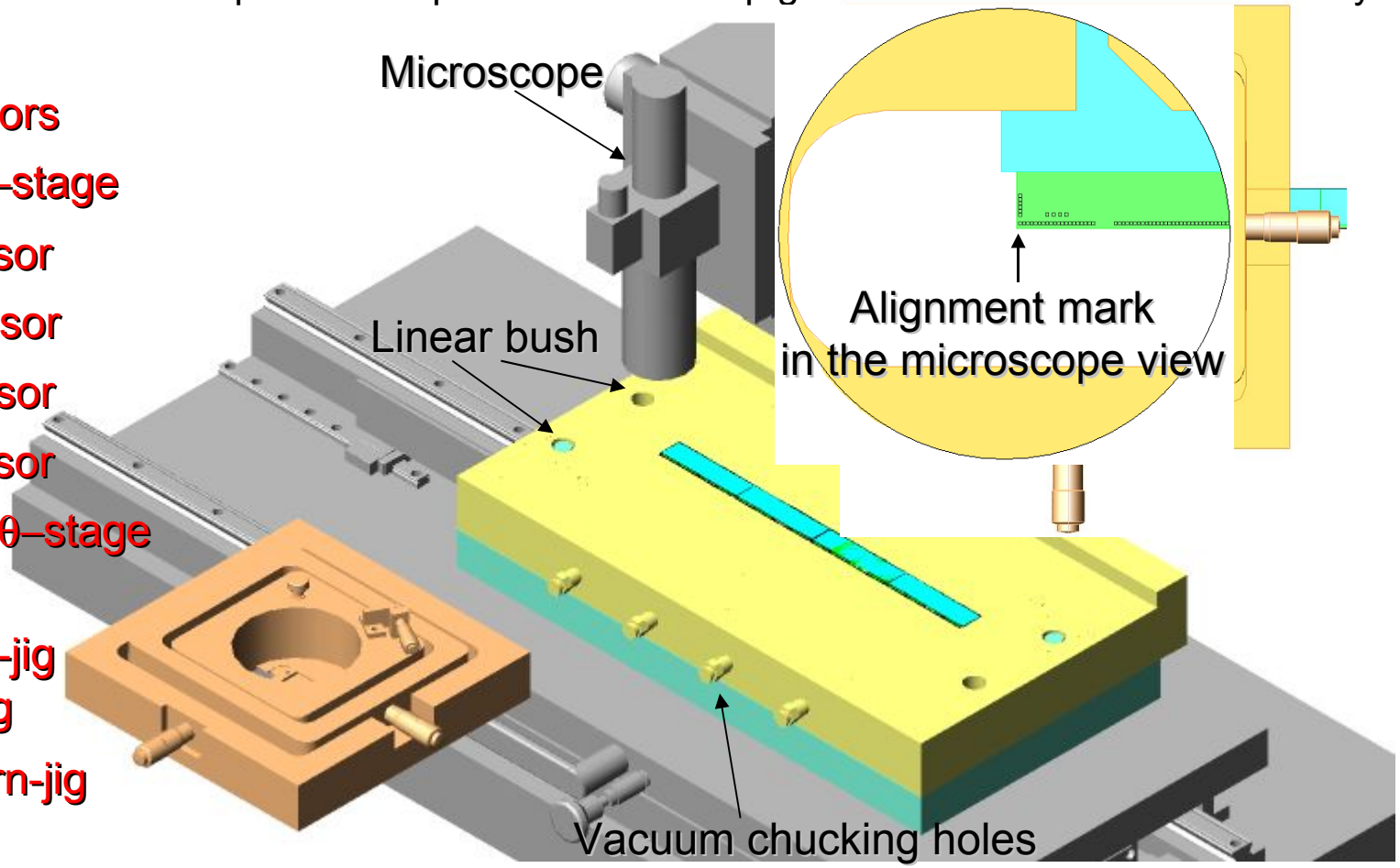

# Gluing

1.Set the jig on the glue dispenser robot

2.Set the C/C support and on the jig

3.Dispense the glue on the support

4.Glue the sensor and support with micrometer to control the thickness of glue

5.Take out the jig

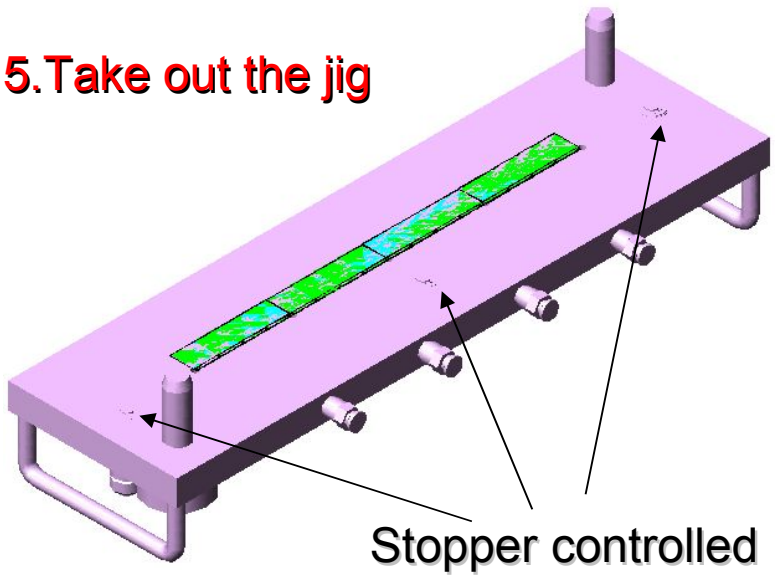


Dispenser robot

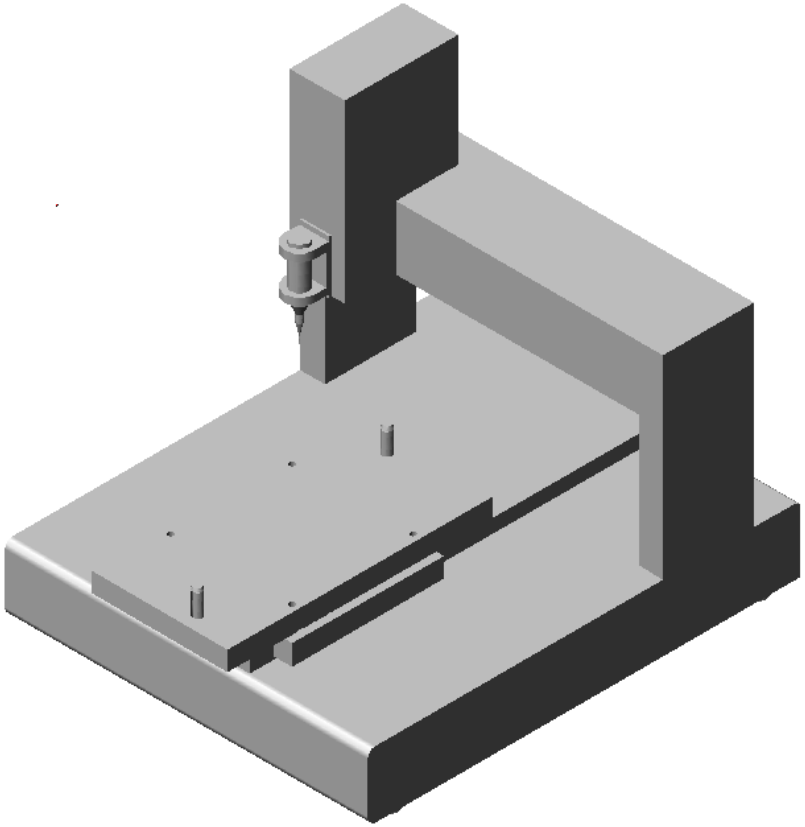

Sensors have been chucking to fix until glue is cured.
Also, assembly procedure for bus is as same as the procedure for sensor.

# Alignment JIGs

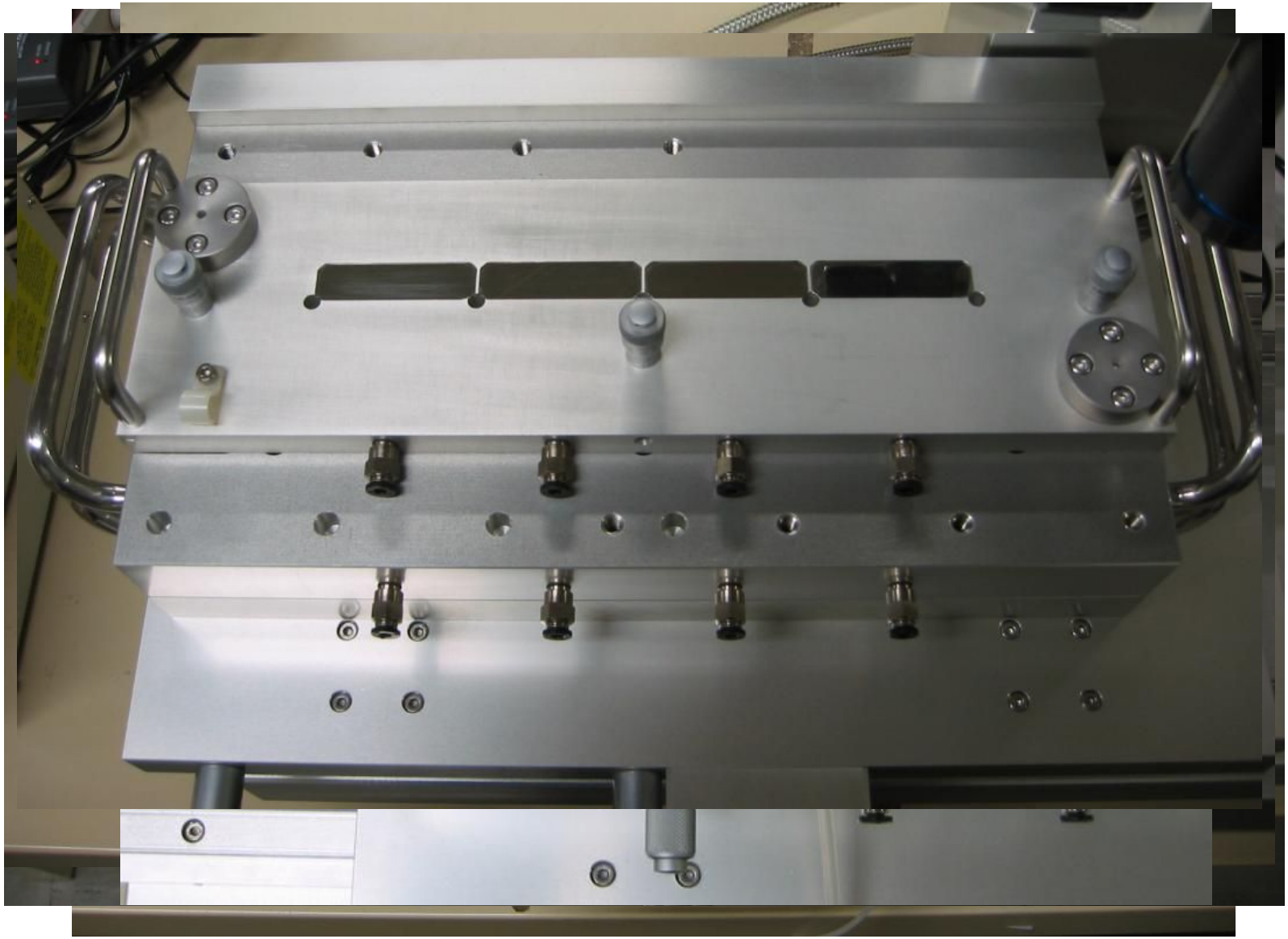

# Time Scale (Pixel)

| WBS | Task Name |
|---|---|
| 1.1.2 | **PIXEL** |
| 1.1.2.1 | **Pixel Sensors** |
| 1.1.2.2 | **Pixel ROC** |
| 1.1.2.3 | **Pixel Sensor Module fabrication** |
| | Milestone: sufficient pixel sensor modules for half vtx |
| | Milestone: sufficient pixel sensor modules for full vtx |
| 1.1.2.4 | **Pixel Bus** |
| | Milestone: pixel bus fabricated |
| 1.1.2.5 | **Pixel Pilot Module** |
| | Milestone: pixel pilot modules tested |
| 1.1.2.6 | **Pixel FEM** |
| | Milestone: pixel FEMs tested |
| 1.1.2.7 | **Pixel trigger module** |
| | Milestone: Pixel trigger module tested |
| 1.1.2.8 | **Prototype Pixel ladder (sensor+ROC+bus+pilot)** |
| | Milestone: Pixel ladder system tests finished |
| 1.1.2.9 | **Pixel ladder production** |
| | Milestone: Pixel Ladders assembled |

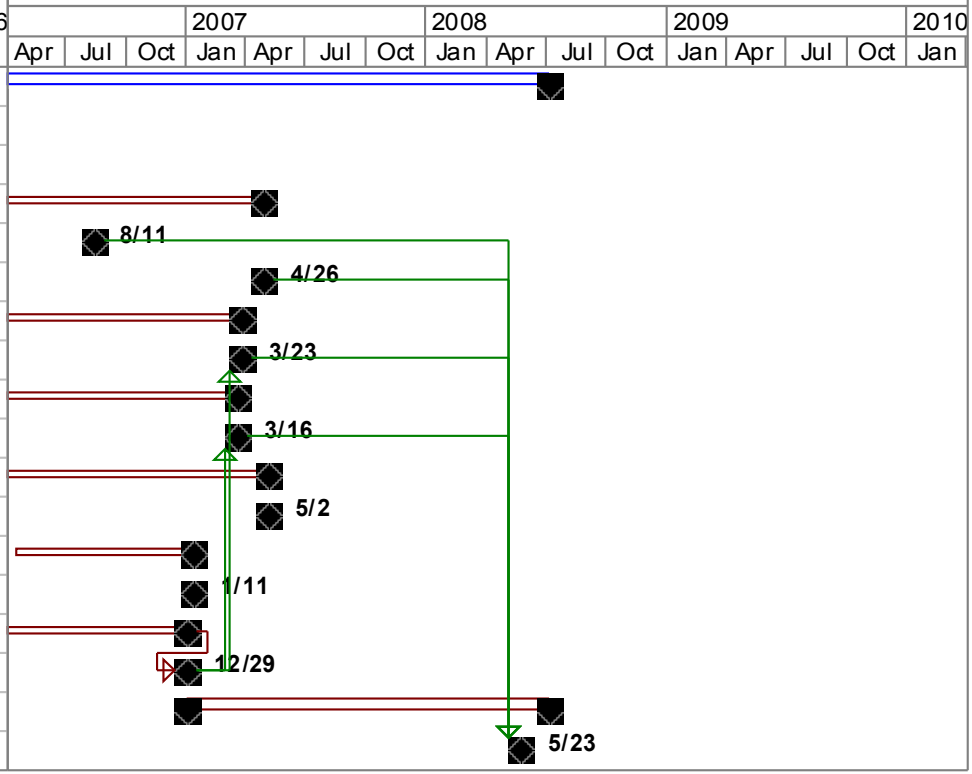

# Time Scale

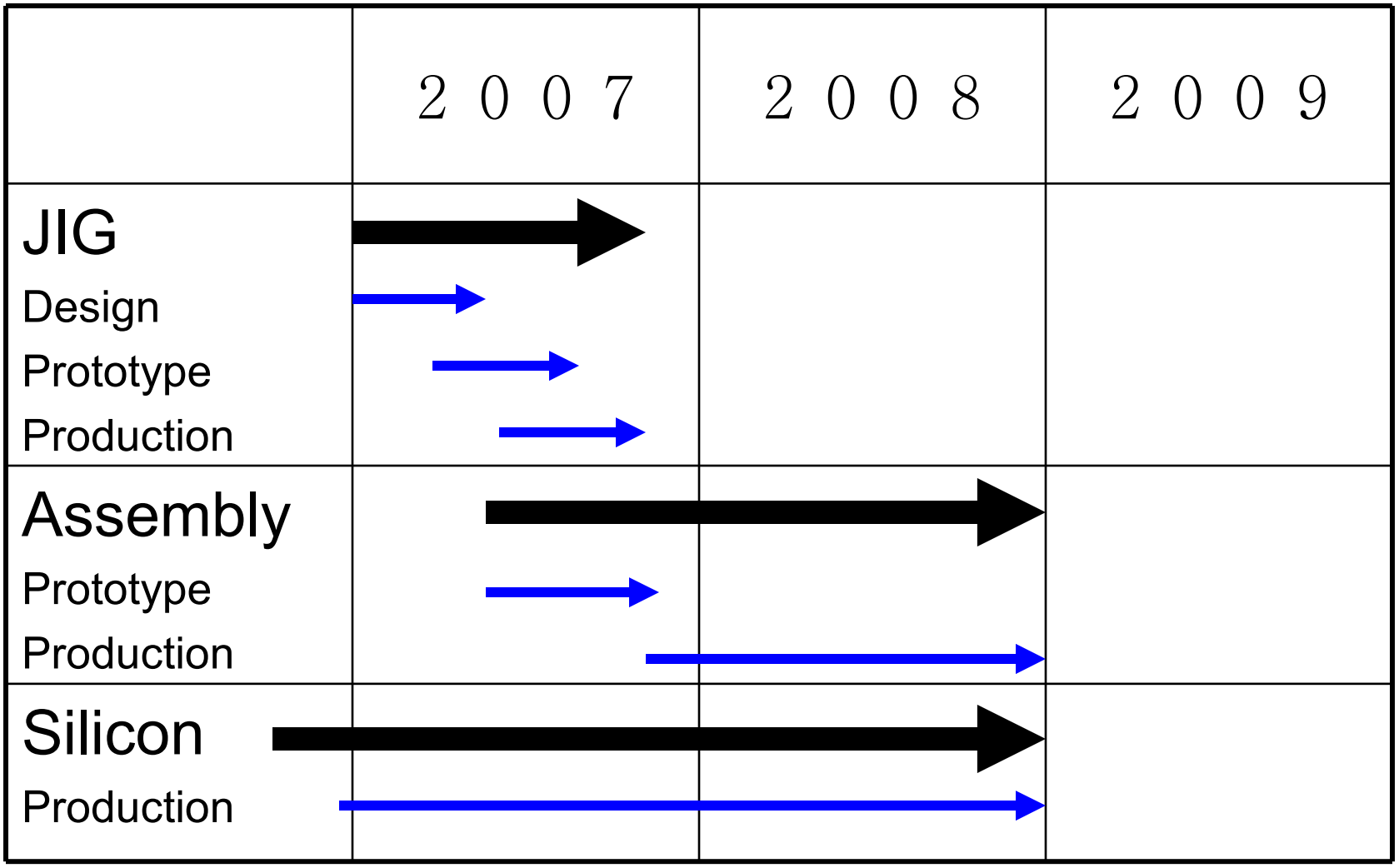
2007
2008
2009
JIG
Design
Prototype
Production
Assembly
Prototype
Production
Silicon
Production

# Backup Slides

# PIXEL (Sensor and Readout)

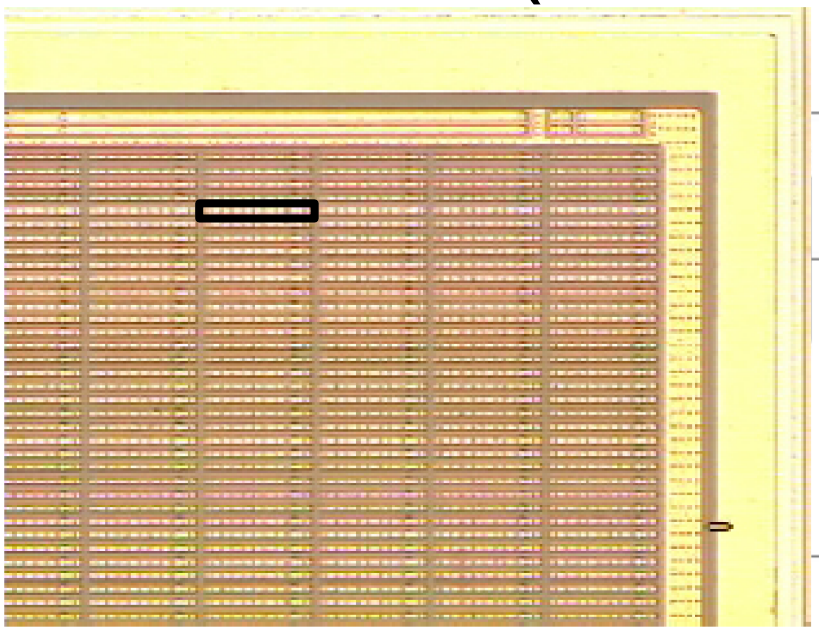

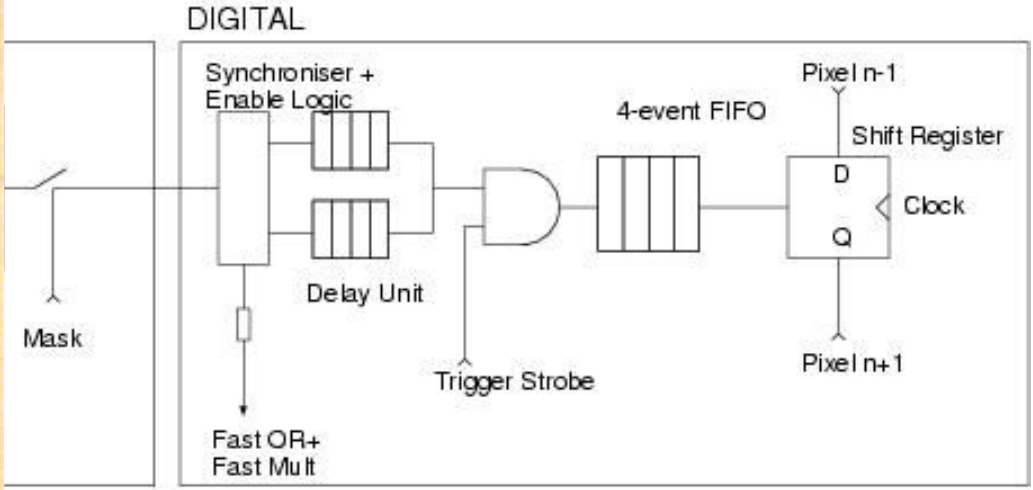


Pixel size($\Phi$ x z ) 50 μm x 425 μm
Sensor Thickness 200um
$\Delta r\Phi$ = 1.28cm, $\Delta z$ = 1.36 cm (Active area)
256 x 32 = 8192 channel / sensor
4 sensor/ chip
4 chip / stave

Readout by ALICE_LHCB1 chip

- Amp + Discriminator / channel
- Bump bonded( 2 dim. Soldering) to each pixel
- Running 10MHz clock ( RHIC 106nsec )
- Digital buffer for each channel > 4usec depth
- Trigger capability > FAST OR logic for each crossing
- 4 event buffer after L1 trigger

# Pixel detector module

- Sensor module consists of 4 ALICE Pixel readout chips Bump-bonded to silicon sensor
- One readout unit, half stave, made from two sensor modules
- Half stave is mounted on the support structure
- Pixel BUS to bring data out and send control signal in to the readout chip is mounted on the half stave
- Each detector module is built of two half staves, read out on the barrel ends

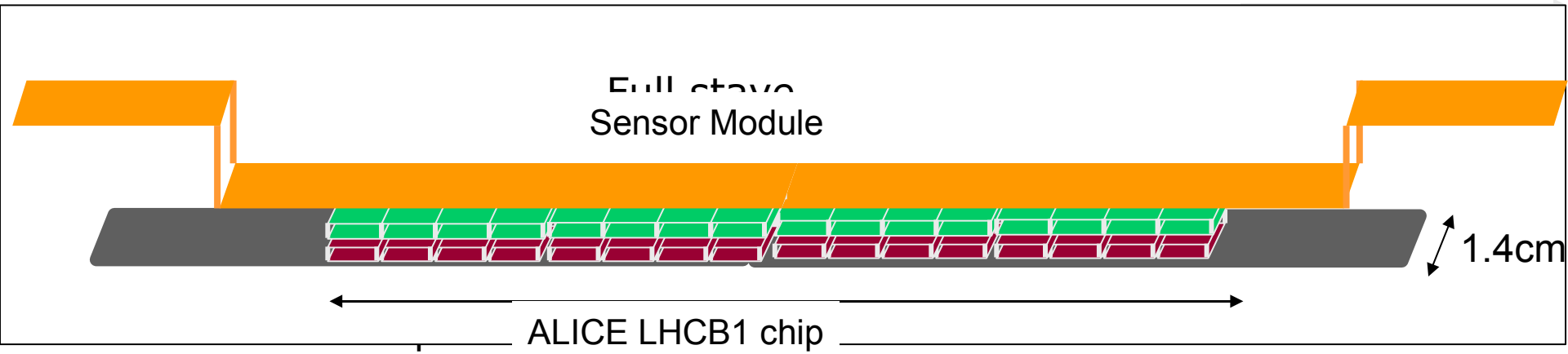

# Pixel Readout Overview

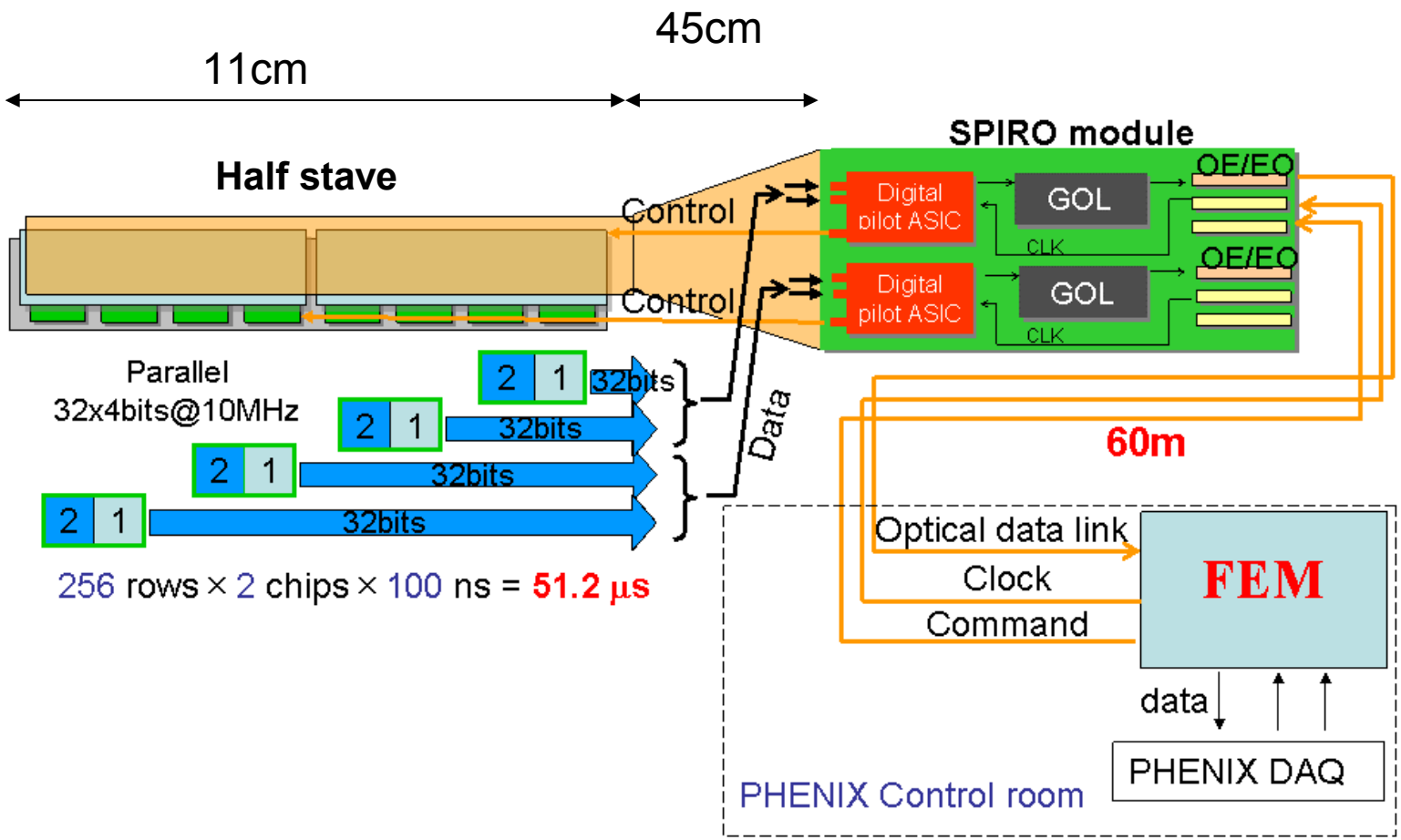

# Readout chip probing

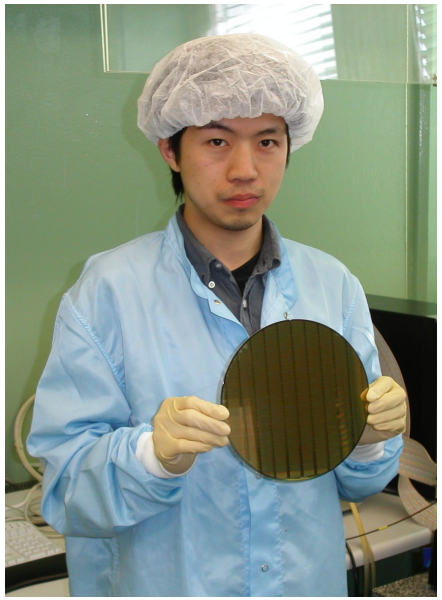

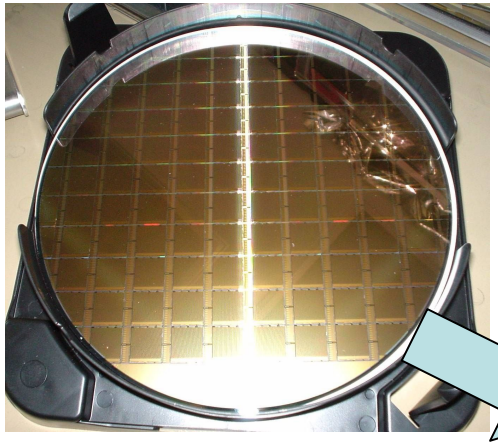

86 chips are on
8″ wafer

**Probe station setup at RIKEN**

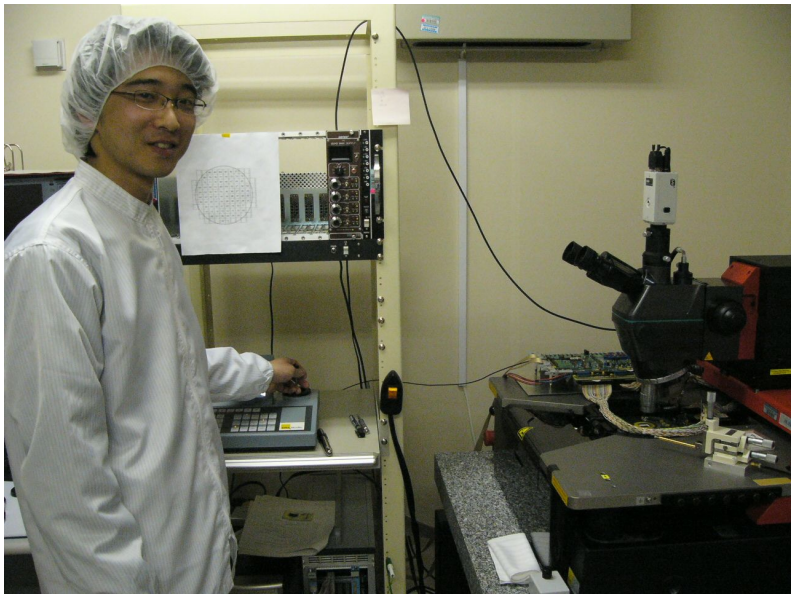

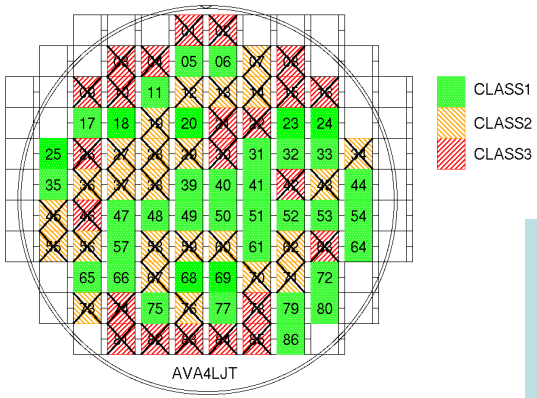


Typical results

Class I All functions are OK, defect pixels <= 1%

Class II All functions are OK, but defect pixels > 1%

Class III Not working with function

# Bump bonding

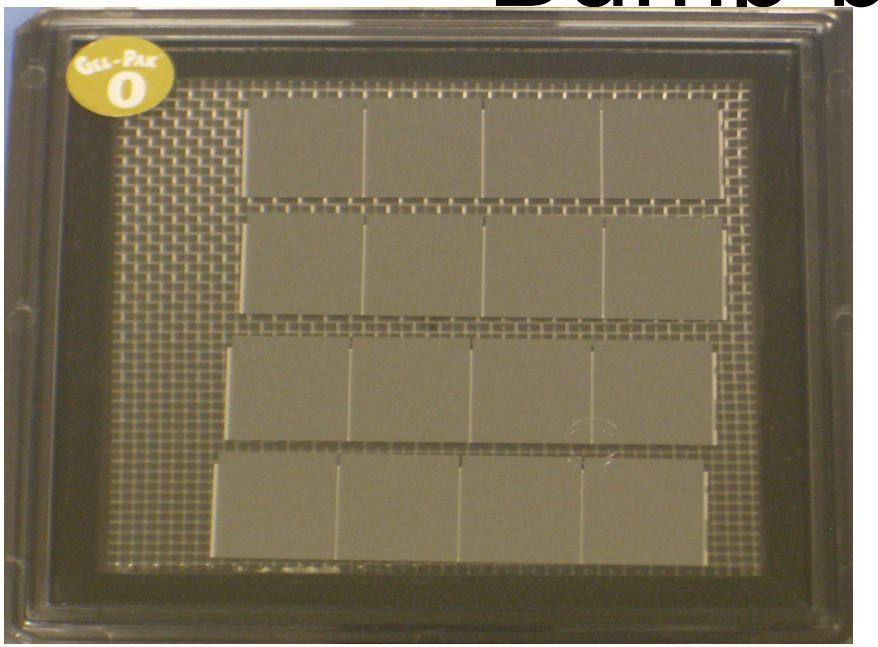


18 Bump bonded sensor modules were delivered to RIKEN. Several modules have been probed and tested fine.

Total 100 sensor modules will be delivered July 2006.

Rest of the sensors modules will be delivered Nov. 2006.

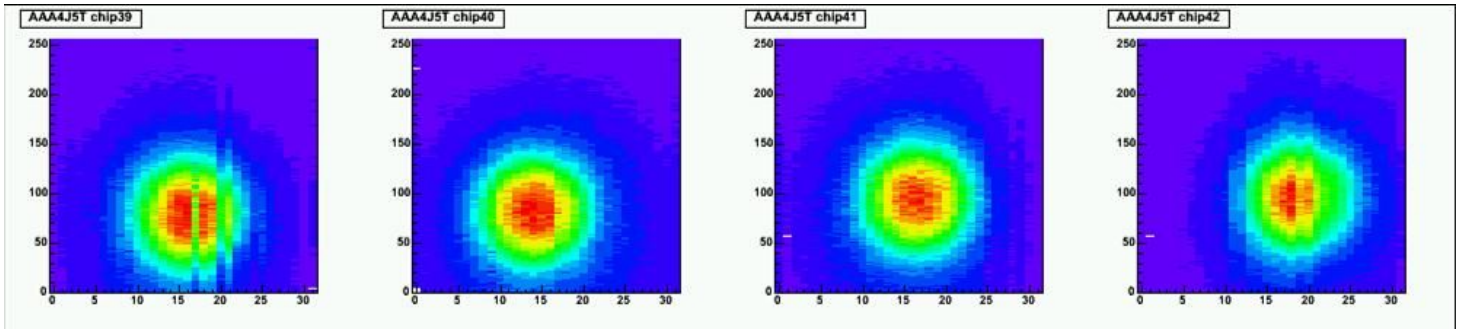

# Bus

- 3cm wide bus was built for electronics test.
- 45 cm long Cu extender was built.
- After electronics test, we will build a 1.4cm wide with 3 micron thickness Cu for reduced radiation length.

# Bus structure

- **5 layers structure**
- **GND, Power and 3 signal lines**

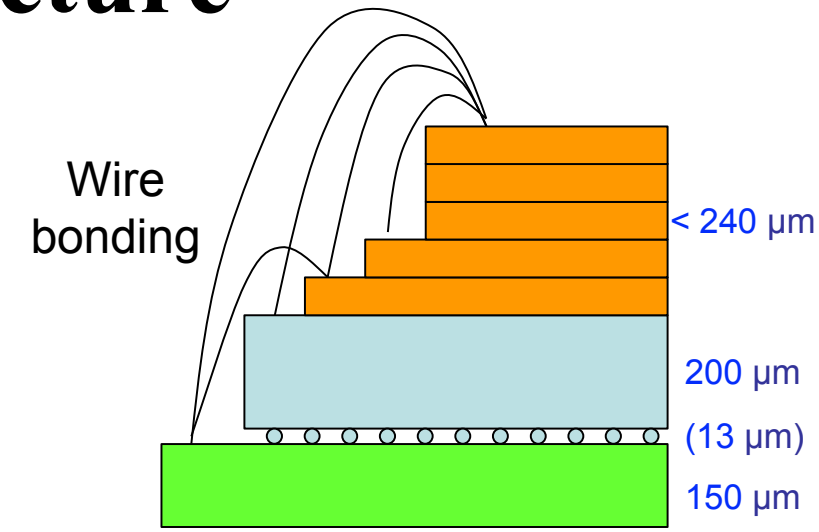


**Final configuration**

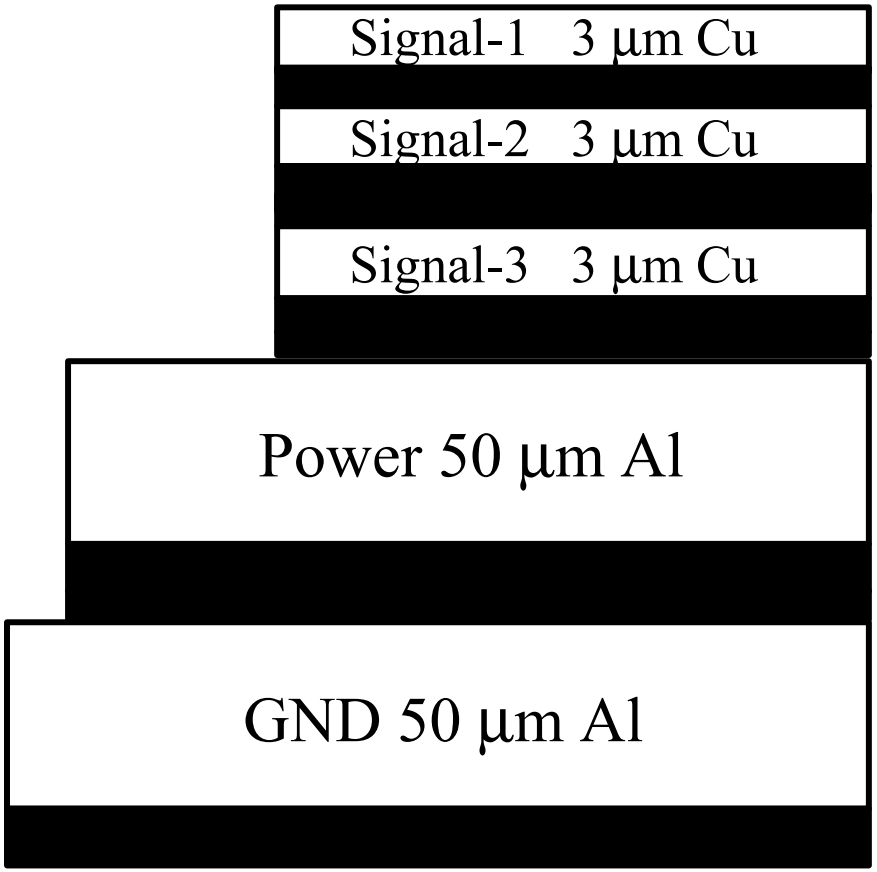


**Signal 1; (for Surface Mount Device)**

**Signal-1, Signal-2, and signal-3 are connected with through hole**

**Signal 2; (Vertical line)**

**line connected with pixel chip with wire bonding**

**Signal 3; (Horizontal line)**

**send signal to Pilot Module connected with vertical line with through hole**

**Line spacing; 70 μm pitch**

**Material Budget; Total ~ 0.26 %**

# Ladder Assembly

- Equipment

  Assembly jigs delivered

  Gluing machine delivered

  Alignment confirmation equipment rent from KEK
- Procedures will be established by fall of 2006
- We are working with Semiconductor Assembly company (Hayashi Seimitsu)

# Assembling

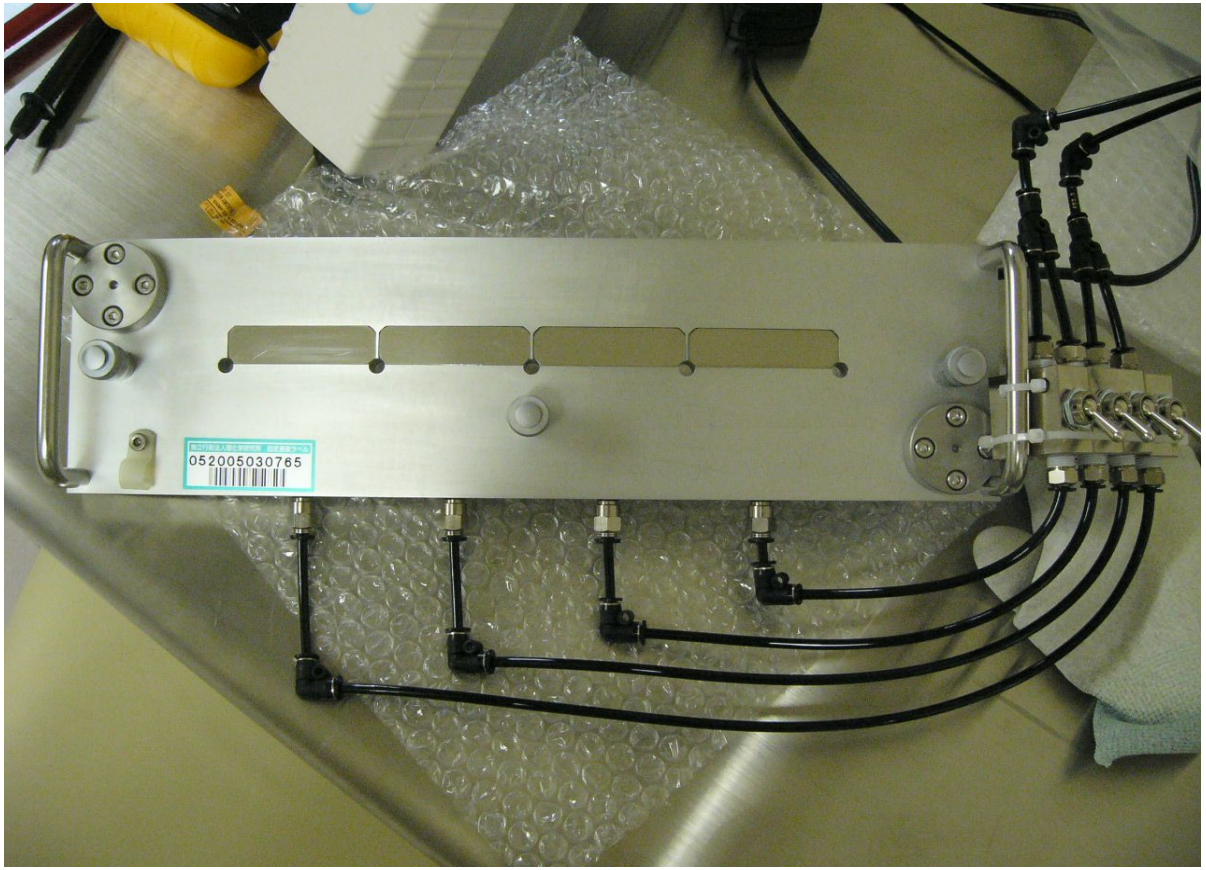

# Responsibility

- **RIKEN group (Niigata, KEK, TiTech, Czech)**

  Fabricate up to staves (sensor, readout chip, bus, assembly) 7.6 FTE

- **Ecole Polytechnique Group**

  SPIRO module 2FTE

- **Stony Brook Group** 1-2 FTE

  Front end module
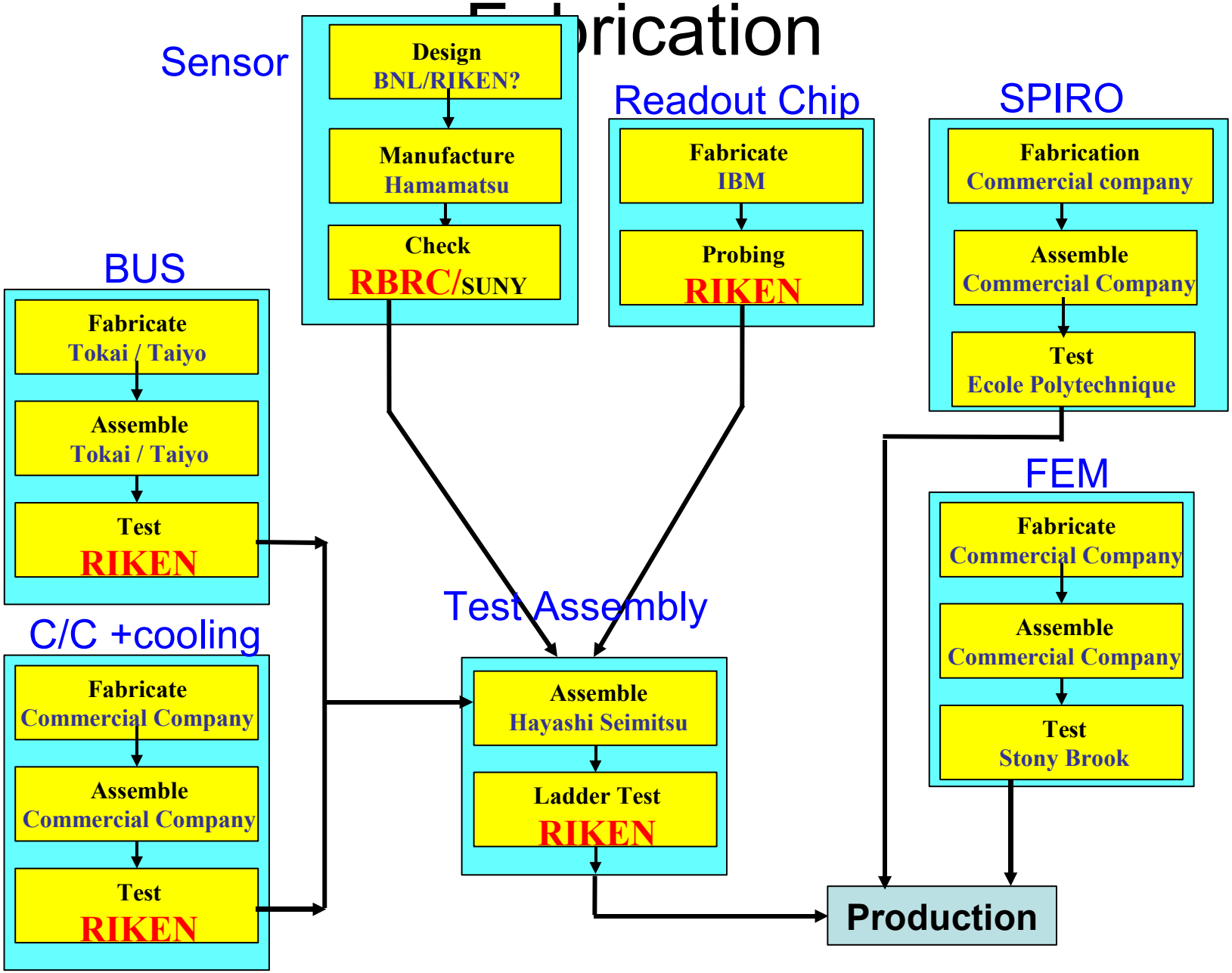
# Flow Chart of Silicon Ladder Fabrication