Strip Readout Card Mounted on Top of the Sensor
Scale 2:1

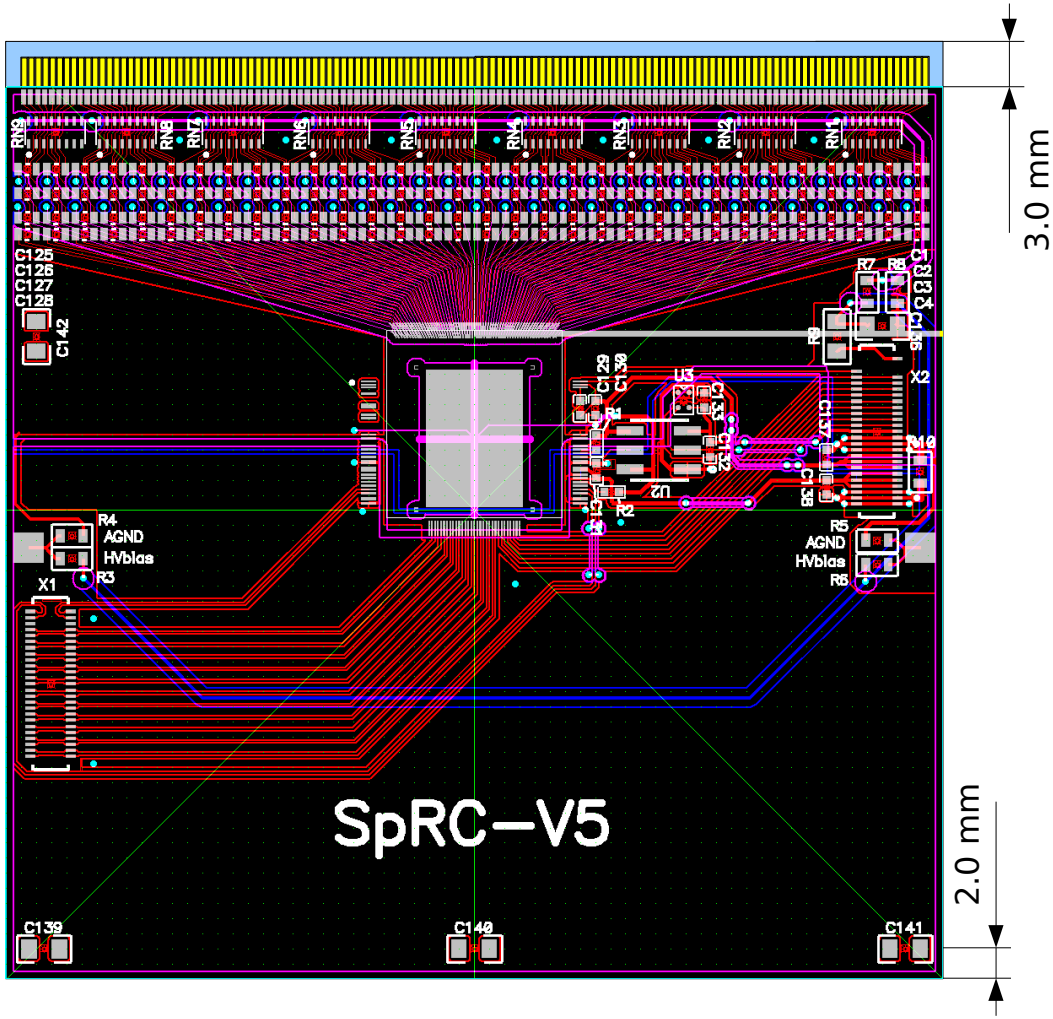

Outline of the StripCAR – the Carrier Board for Strips and its position relative to the pad carrier board

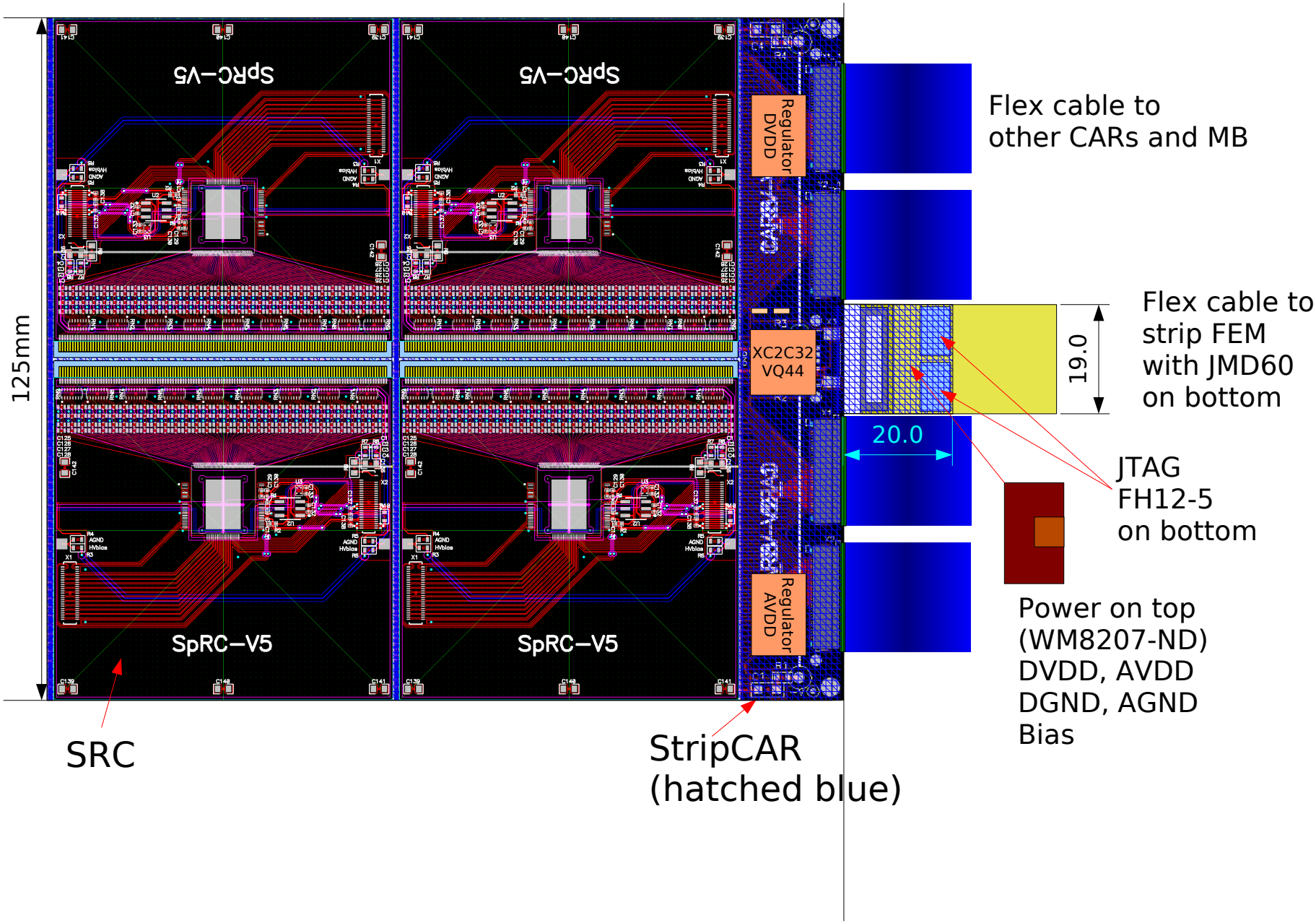

Arrangement of the SpRC-2 Readout Card on the Back Side of the Strip Carrie

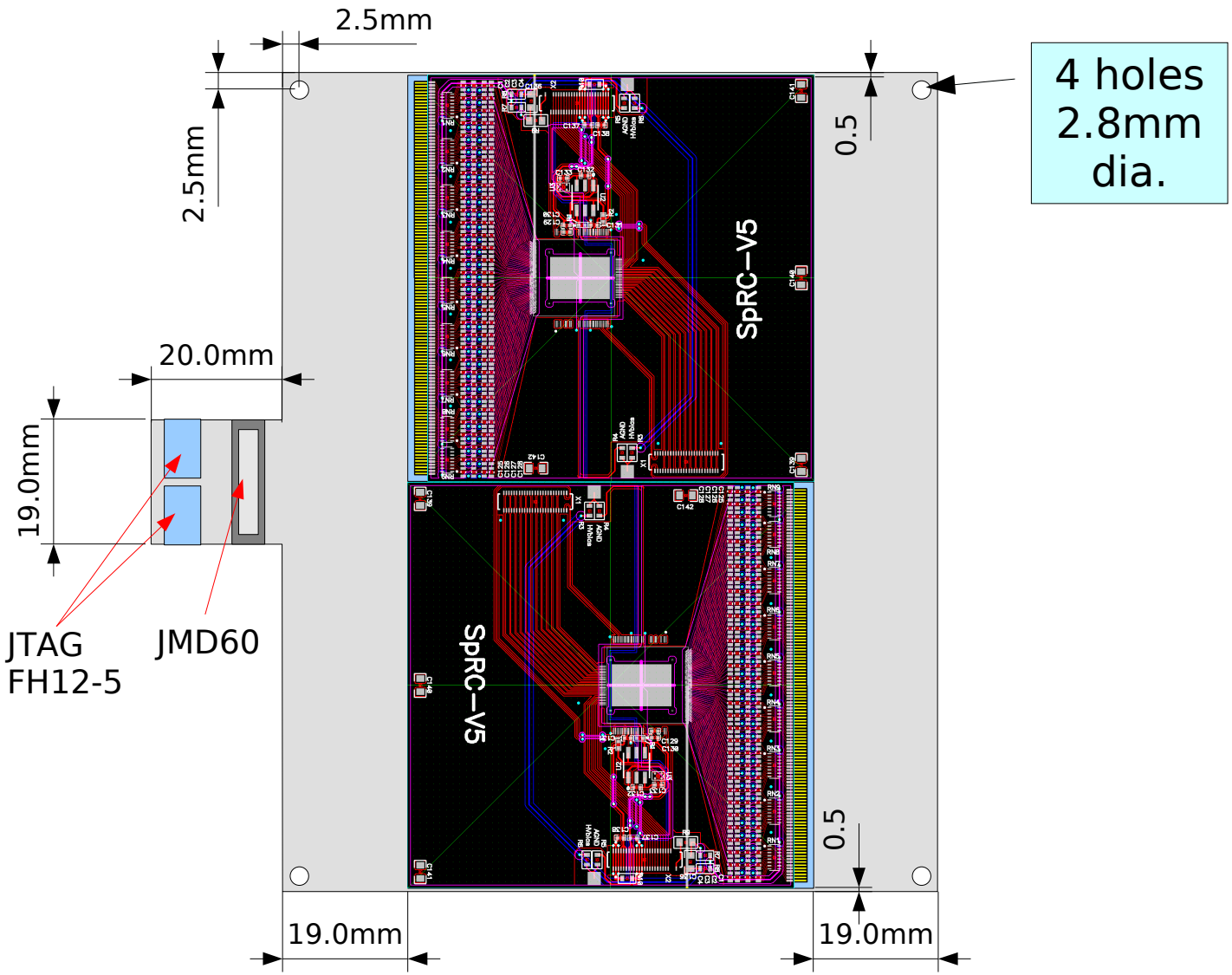

Calorimeter Stackup

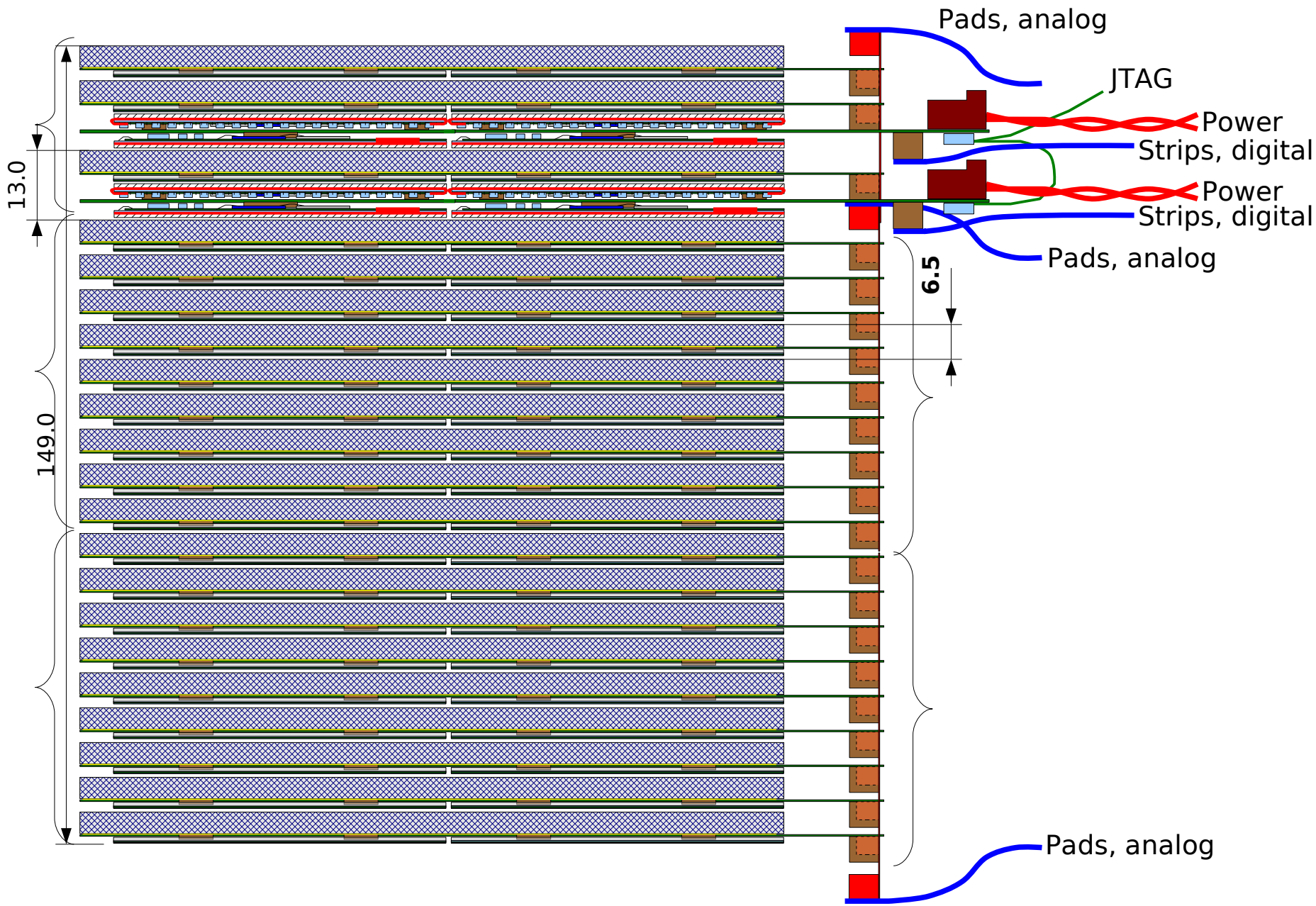

Power Requirements for StripCAR

# of SpRC	AVDD [V]	AVDD [A]	DVDD [V]	DVDD [A]	Total Watt	Total AVDD[A]	Total DVDD [A]
16	2.5	0.08	2.5	0.15	9.2	1.28	2.4

Linear regulator requires thick wires, have low efficiency.

Power step-down converter requires large inductors (10uH, 4A). The ferrite inductor cannot be used in the magnetic field area (0.7T).

The linear regulator LT1764AEQ from Linear have lowest dropout voltage: 0.35V at 3.0A. The dissipated power will be 1 Watt, which is acceptable.

Components for step-down converter
•Capacitor 12066D476MAT2A
478-4532-1-ND
CAP CER 47UF 6.3V X5R 20% 1206
•INDUCTOR POWER 10UH 4.40A SMD
CDRH104RNP-100NC
308-1429-1-ND
•Sync Step-Down Converter, 3A
MP2403DN-LF

MP2403

3A, 32V, 250KHz Synchronous Rectified Step-Down Converter

Back | Product Tree

DESCRIPTION

The MP2403 is a monolithic synchronous buck regulator. The device integrates a 150mΩ high side MOSFET and a 80mΩ low side MOSFET that provide 3A continuous load current over a wide operating input voltage of 4.6V to 32V. Current mode control provides fast transient response and cycle-by-cycle current limit. An adjustable soft-start prevents inrush current at turn-on. In shutdown mode, the supply current drops to 1μA. This device, available in an 8-pin SOIC package, provides a very compact system solution with minimal reliance on external components.

FEATURES

- 3A Output Current
- Wide 4.6V to 32V Operating Input Range
- Integrated MOSFET Switches
- Output Adjustable from 0.80V to 28V
- Up to 95% Efficiency
- Programmable Soft-Start
- Stable with Low ESR Ceramic Output Capacitors
- Fixed 250KHz Frequency
- Cycle-by-Cycle Over Current Protection
- Input Under Voltage Lockout
- Thermally Enhanced 8-Pin SOIC Package"

DOCUMENTS

Product Datasheets

MP2403

Datasheet Request

Evaluation Boards

EV2403DN-00A

TYPICAL APPLICATION

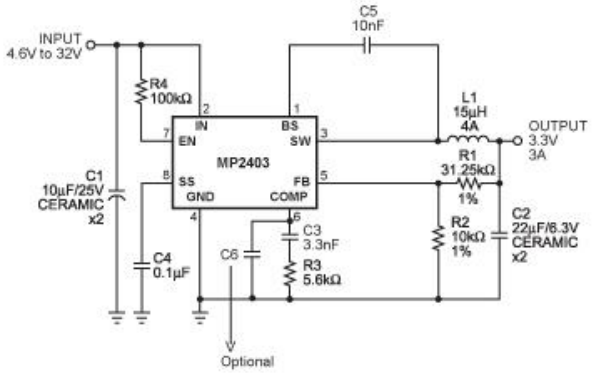

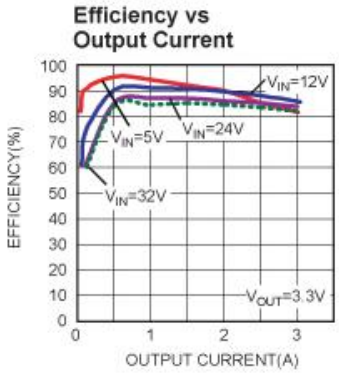

Backup Slide

Power cable 24AWG: 8125/20 100-ND, CABLE 20 COND FLAT POWER .100", 100' $240

Power connector 3A per pin: HSL10HND,

FH12-6S-1SH(55), HFB106TR-ND, CONN FPC/FFC 6POS 1MM HORIZ SMD

HFB105CT-ND FH12-5S-1SH(55) CONN FPC/FFC 5POS 1MM HORIZ SMD

HF05U-12-ND 100R05-305B CABLE FLAT FLEX 5POS 1MM 12"

HF05U-04-ND 100R05-102B CABLE FLAT FLEX 5POS 1MM 4"

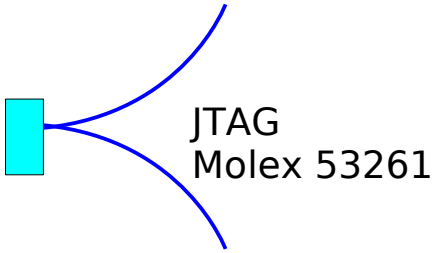
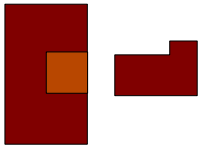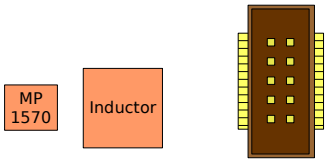
Power: WM8207-ND 90136-2206, CONN HEADER 6POS .100" R/A GOLD