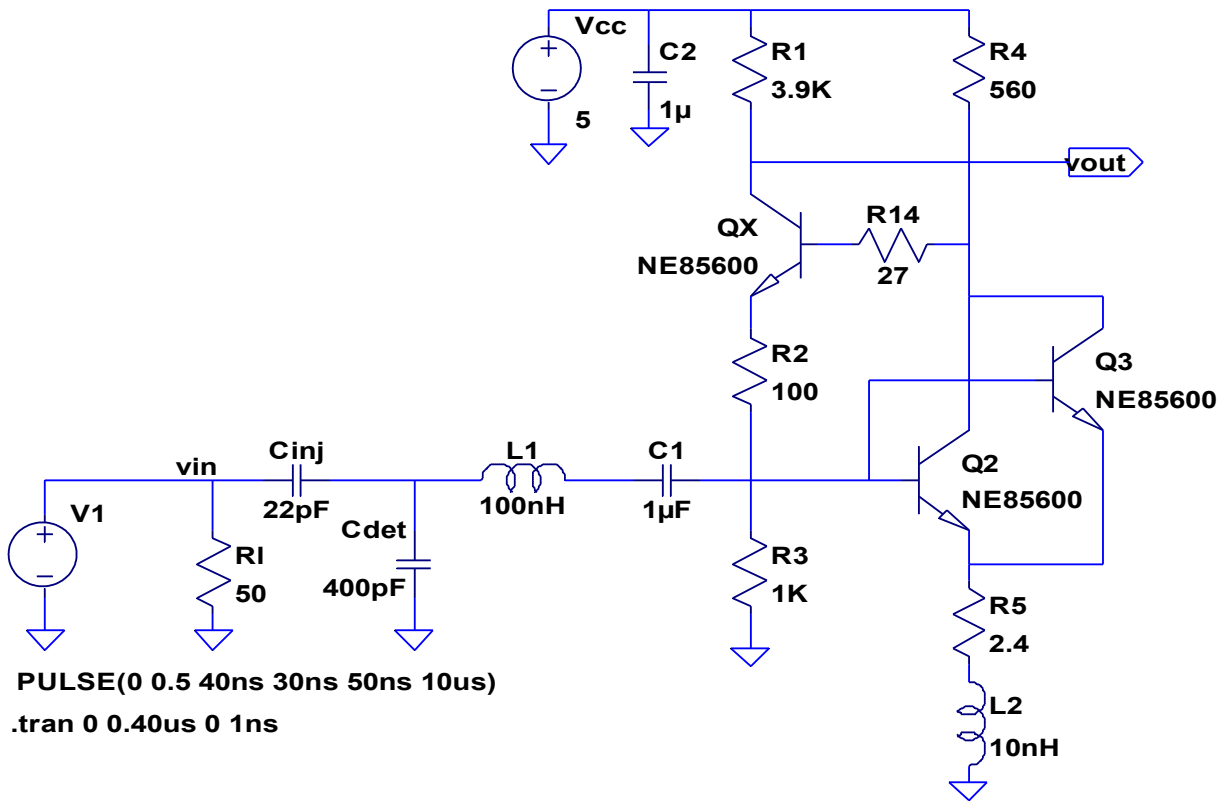

The model statement for simulating NE85630 in LTSpice

```
.MODEL NE85600 NPN
+( IS=6e-16      BF=120          NF=0.978       VAF=10          IKF=0.08
+ ISE=32e-16     NE=1.93         BR=12          NR=0.991        VAR=3.9
+ IKR=0.17       ISC=0           NC=2           RE=0.38         RB=4.16
+ RBM=3.6        IRB=1.96e-4     RC=2           CJE=2.8e-12     VJE=1.3
+ MJE=0.5        CJC=1.1e-12     VJC=0.7        MJC=0.55        XCJC=0.3
+ CJS=0          VJS=0.75        MJS=0          FC=0.5          TF=10e-12
+ XTF=6          VTF=10          ITF=0.2        PTF=0           TR=1e-9
+ EG=1.11        XTB=0           XTI=3          KF=1.56e-18     AF=1.49 )
```

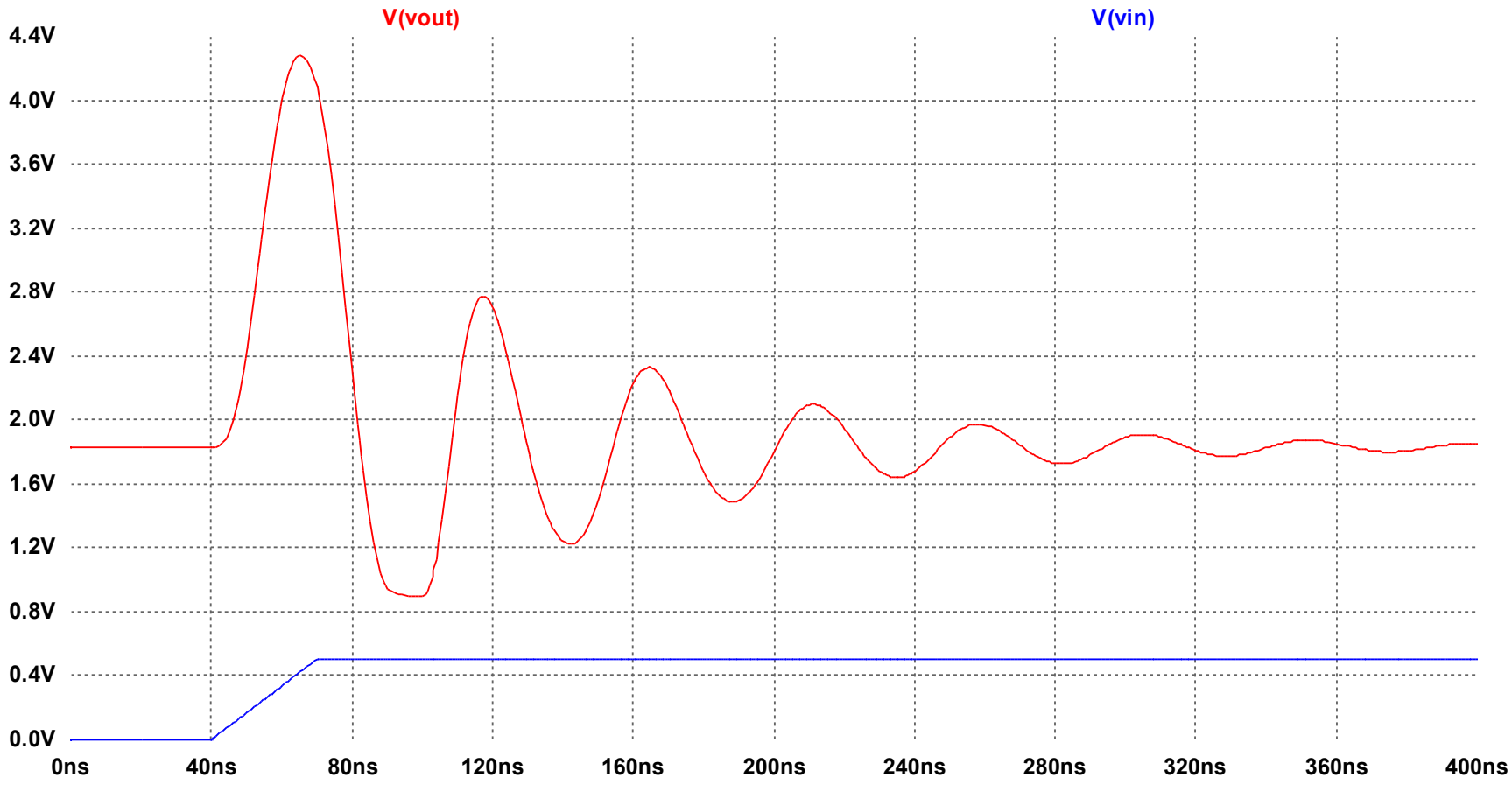
V(vout)
V(vin)
4.4V
4.0V
3.6V
3.2V
2.8V
2.4V
2.0V
1.6V
1.2V
0.8V
0.4V
0.0V
0ns
40ns
80ns
120ns
160ns
200ns
240ns
280ns
320ns
360ns
400ns