Simulation of the Preamplifier for NCC Pad Sensors

Table of Contents

PAMP8_20K. Model with the gain of 20 KOhm....1
PAMP8_40K. Model with the gain of 40 KOhm....4
PAMP8_40K model for manufactured PCB....6
PAMP8_4K first version....7
PAMP8_4K. Model with gain 4 Kohm....9
PAMP8_4K model for manufactured PCB....11

PAMP8_20K. Model with the gain of 20 KOhm

PAMP-20K0 model of 071204.

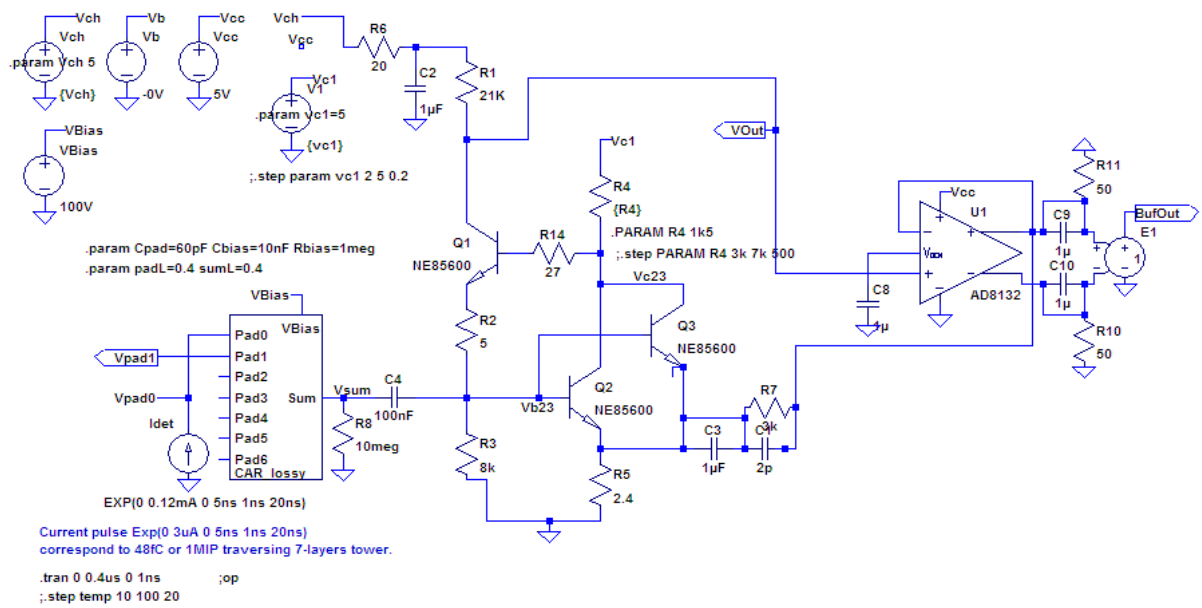

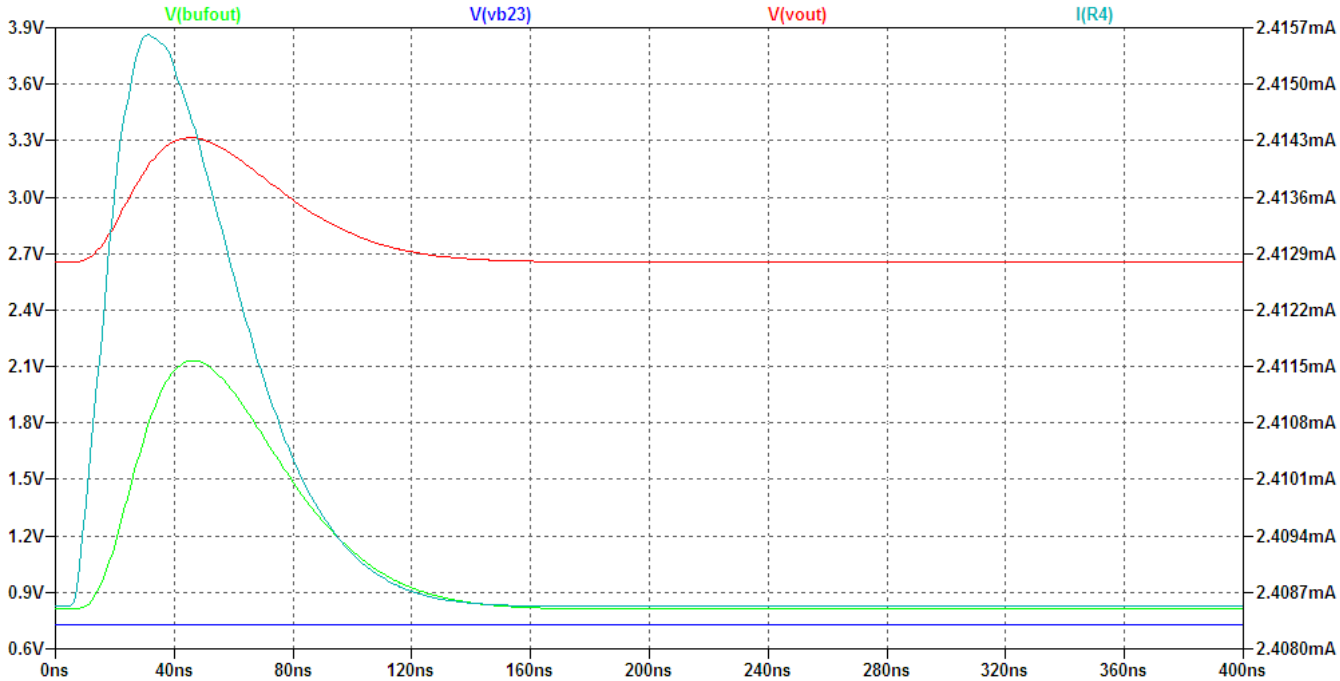

Fig. 2: Large signal response

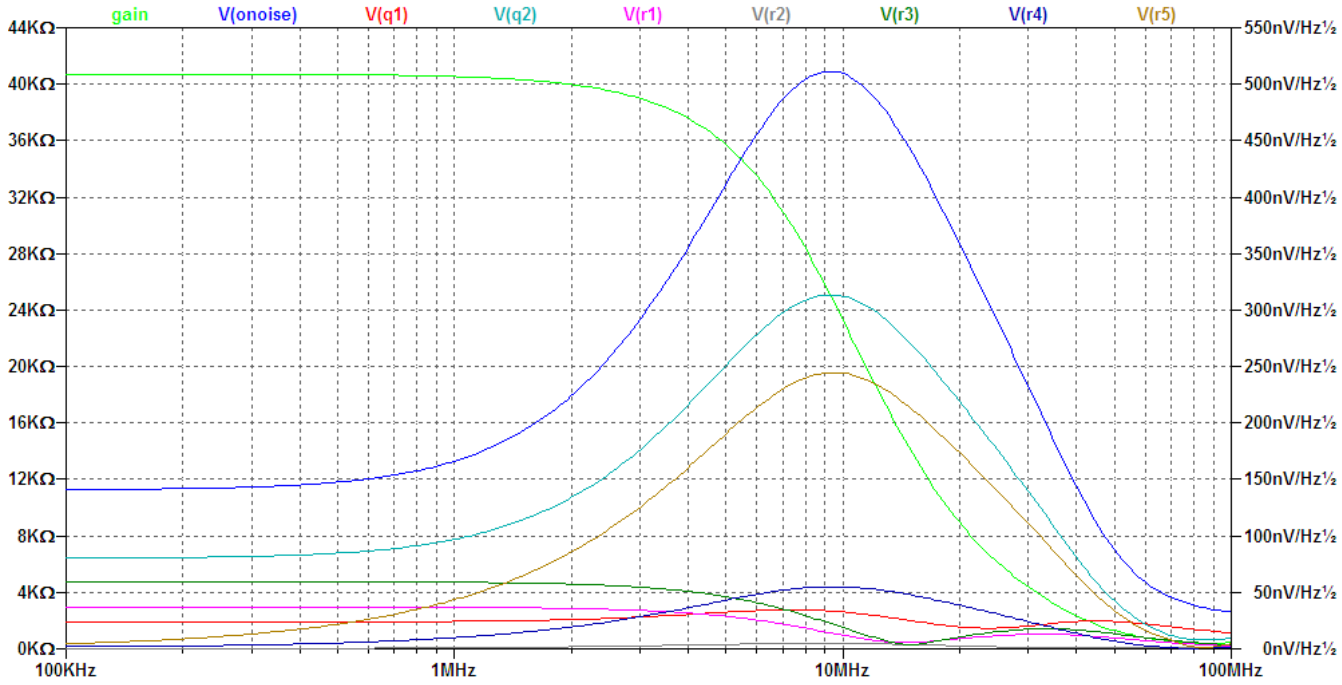
gain
V(onoise)
V(q1)
V(q2)
V(r1)
V(r2)
V(r3)
V(r4)
V(r5)
44KΩ
40KΩ
36KΩ
32KΩ
28KΩ
24KΩ
20KΩ
16KΩ
12KΩ
8KΩ
4KΩ
0KΩ
550nV/Hz½
500nV/Hz½
450nV/Hz½
400nV/Hz½
350nV/Hz½
300nV/Hz½
250nV/Hz½
200nV/Hz½
150nV/Hz½
100nV/Hz½
50nV/Hz½
0nV/Hz½
100KHz
1MHz
10MHz
100MHz

Fig. 3:

PAMP8_40K. Model with the gain of 40 KOhm

File pamp_wf40kv0rsimple.asc

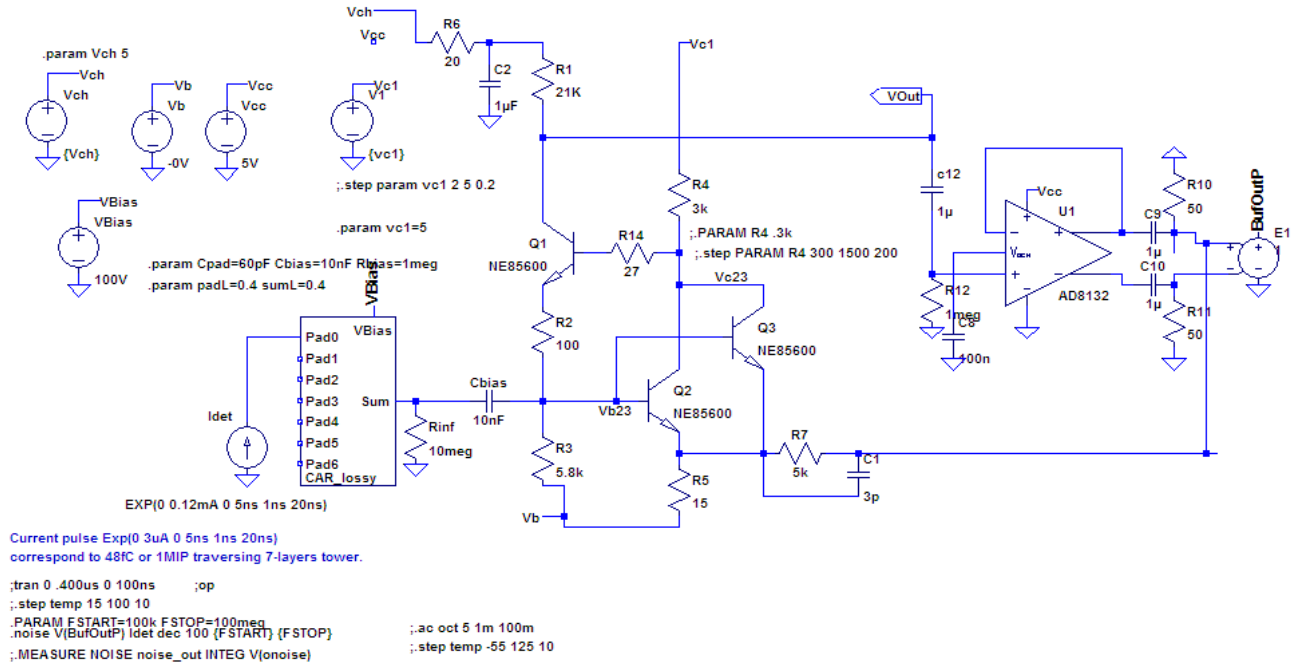

Fig. 4:

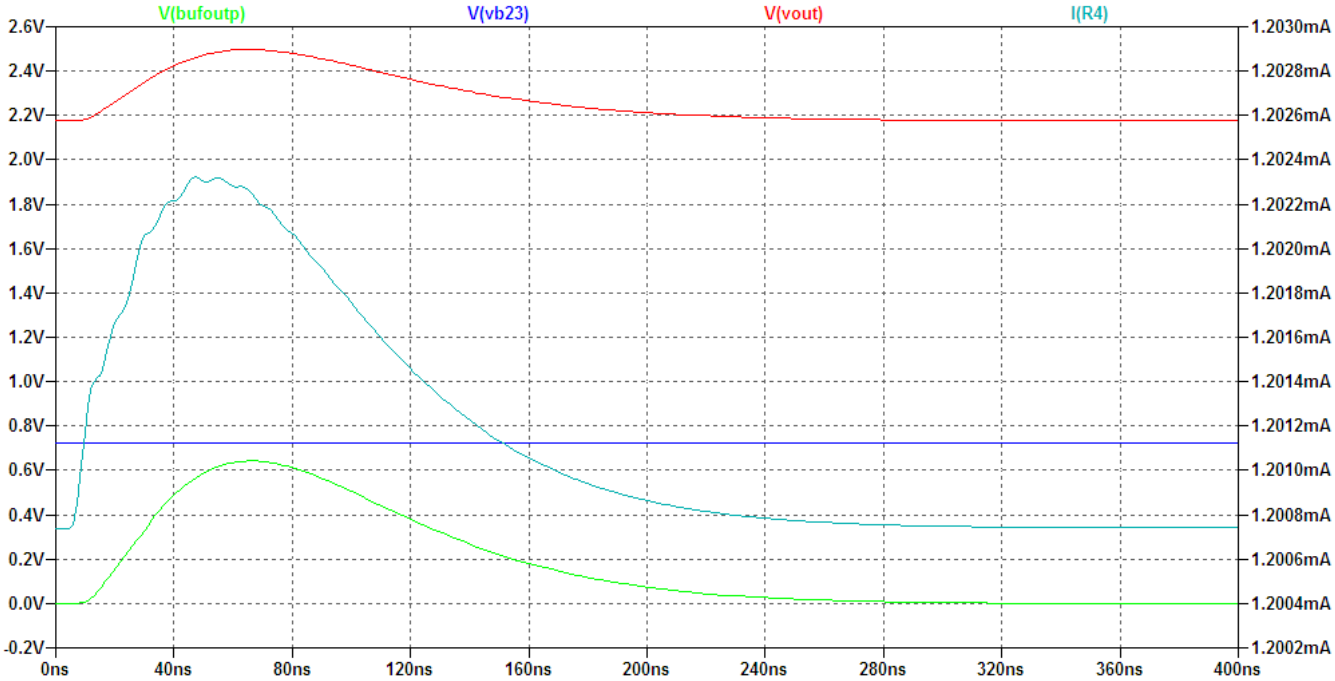

Fig. 5:

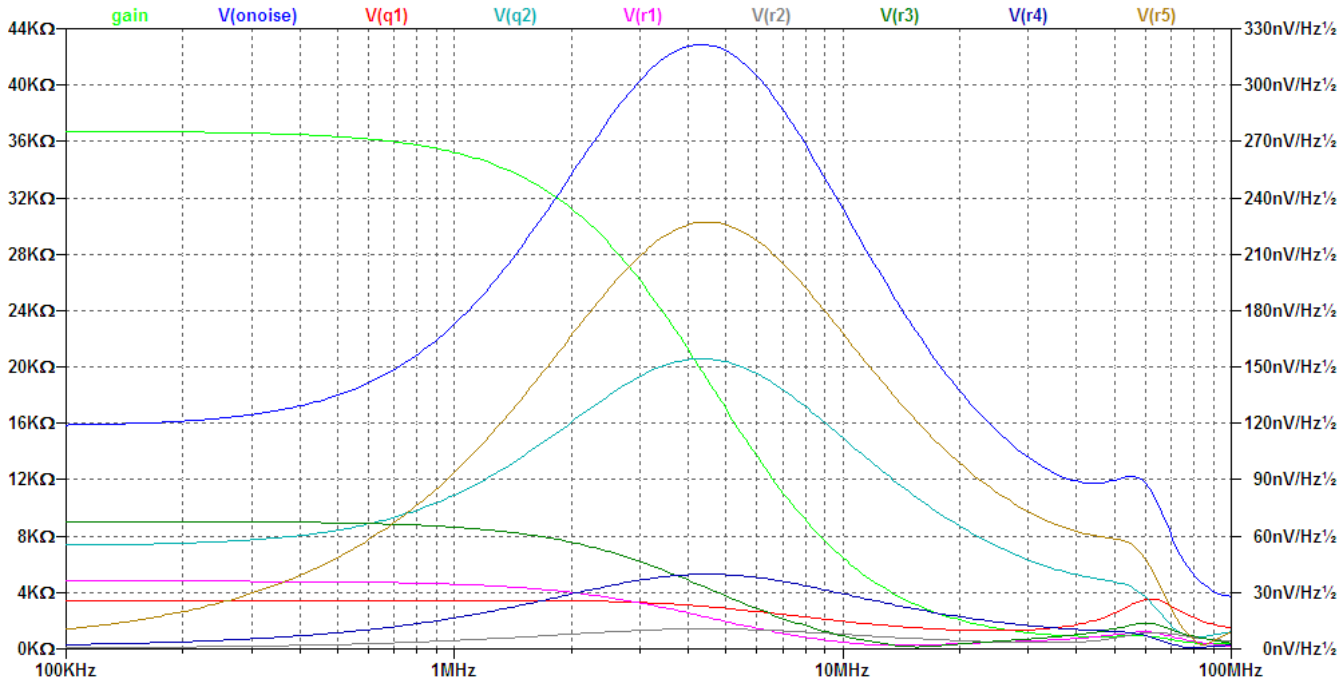

Fig. 6: Noise is slightly less than for PAMP-20K0.

PAMP8_40K model for manufactured PCB

File pamp_40k_car_shaper

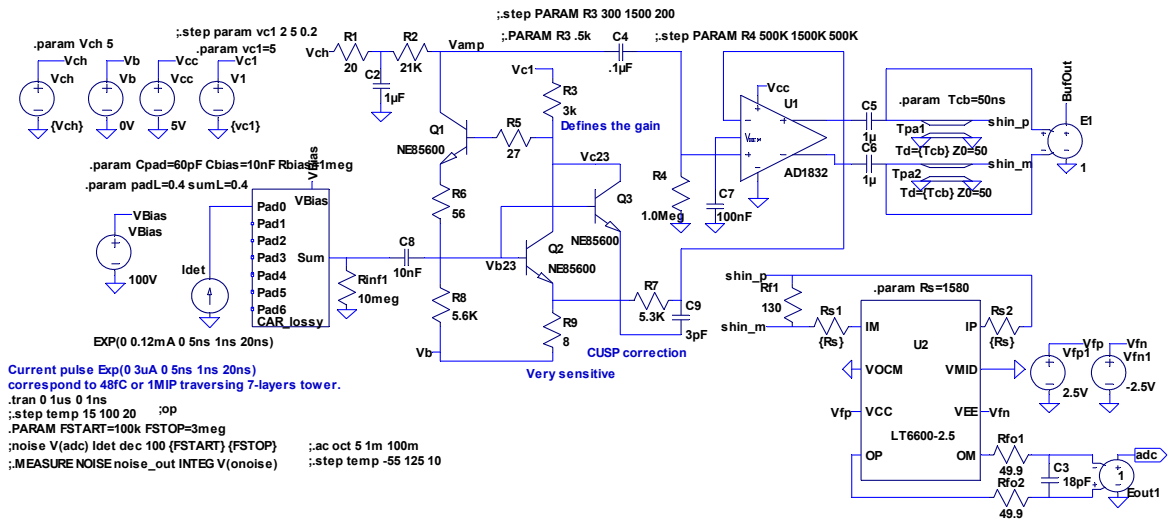

Fig. 7:

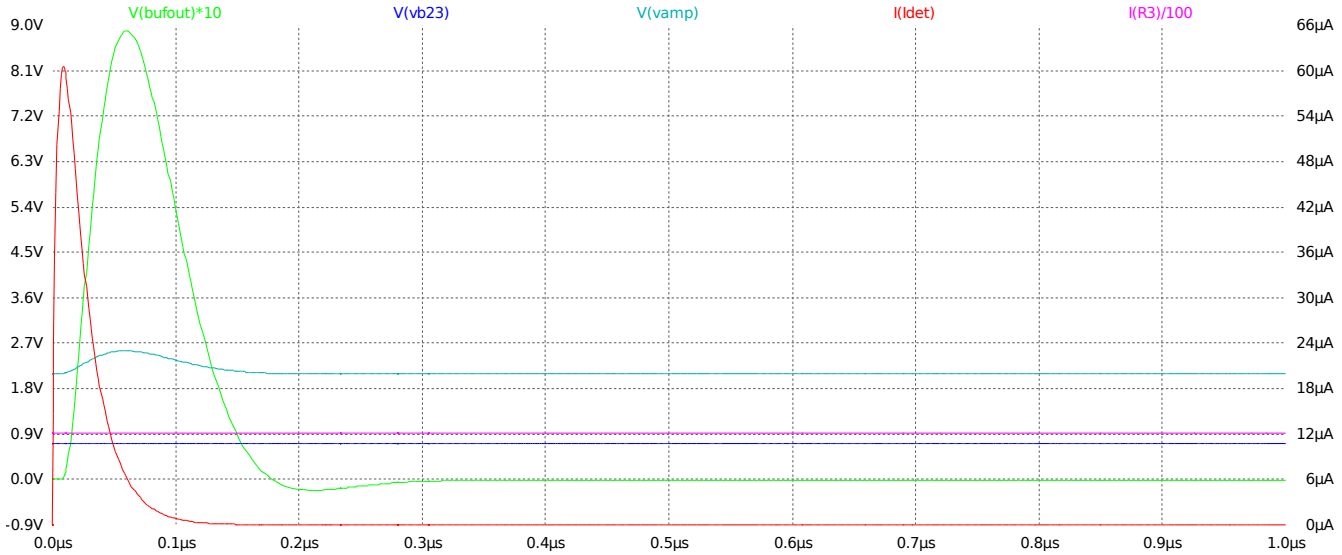

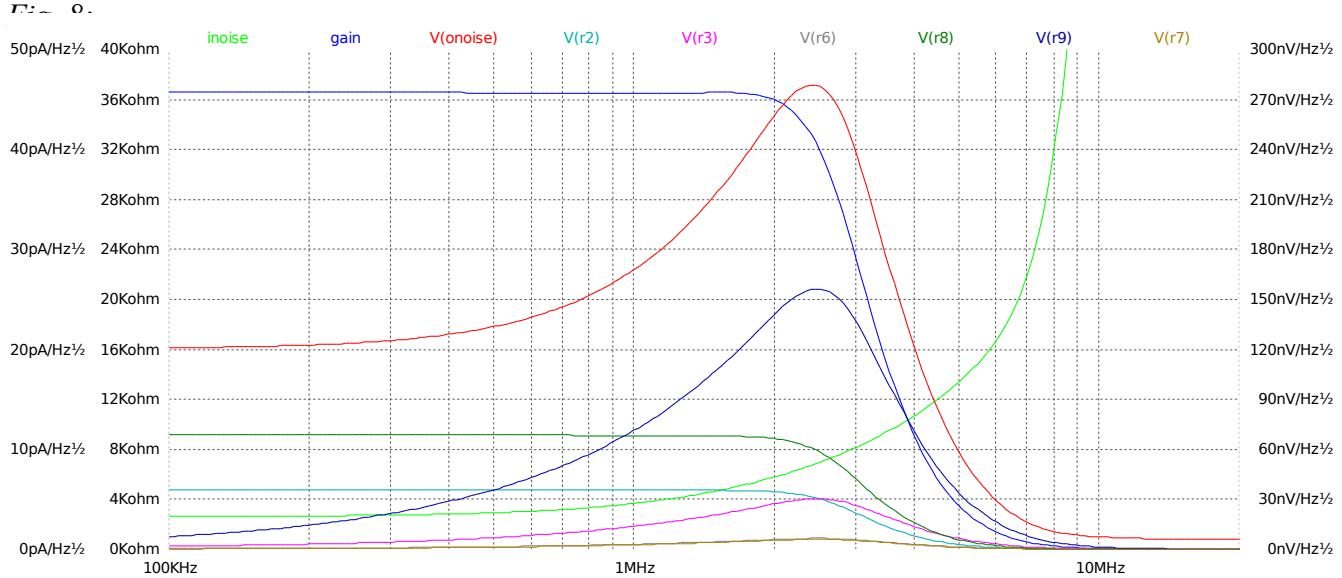

Fig. 9: Input noise [0:3MHz] = 11.5 nA

PAMP8_4K first version

File pamp_4k.asc

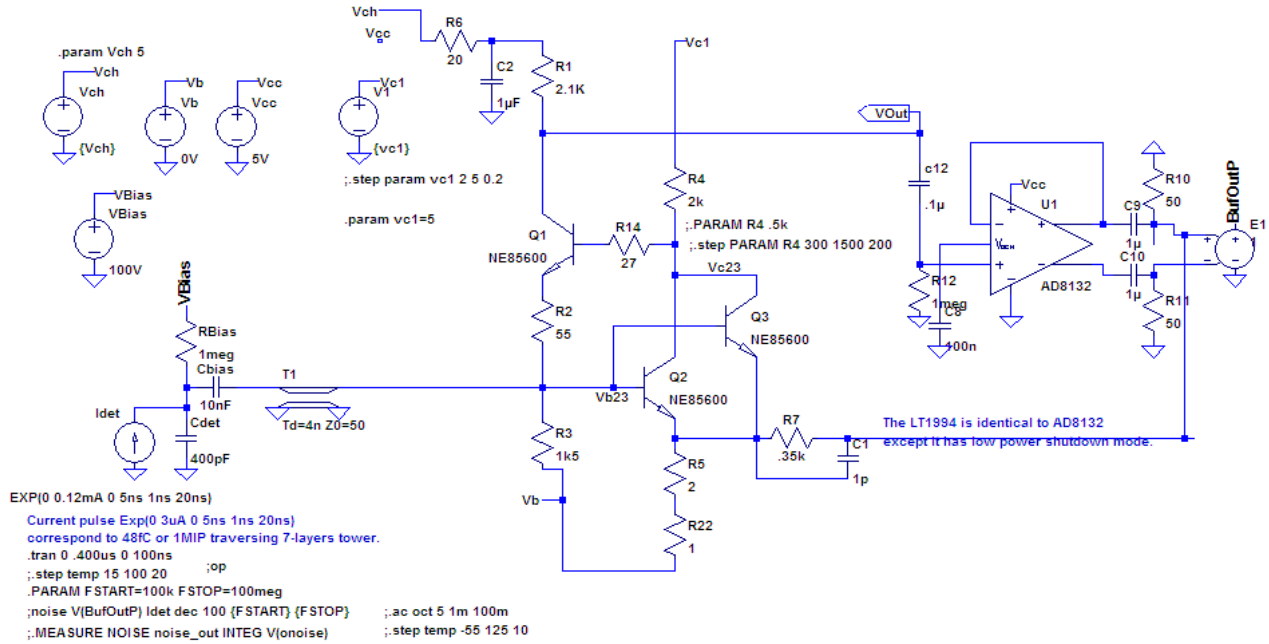

Fig. 10:

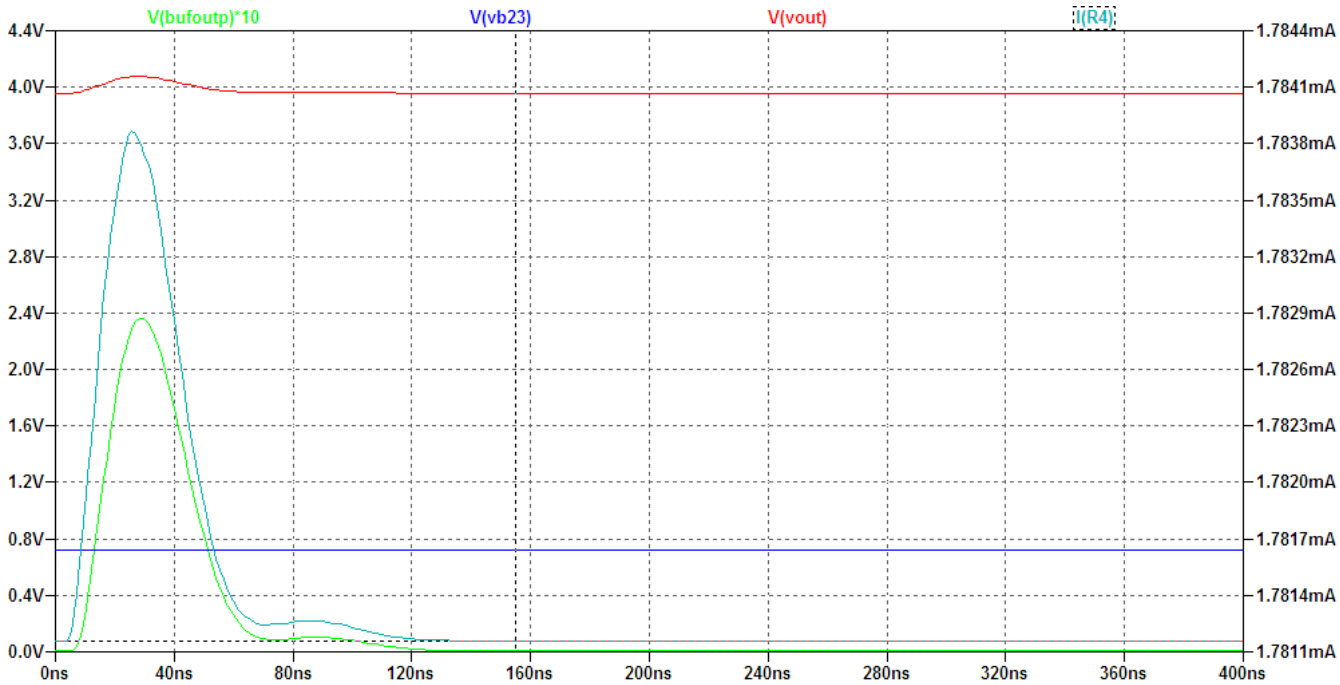

Fig. 11:

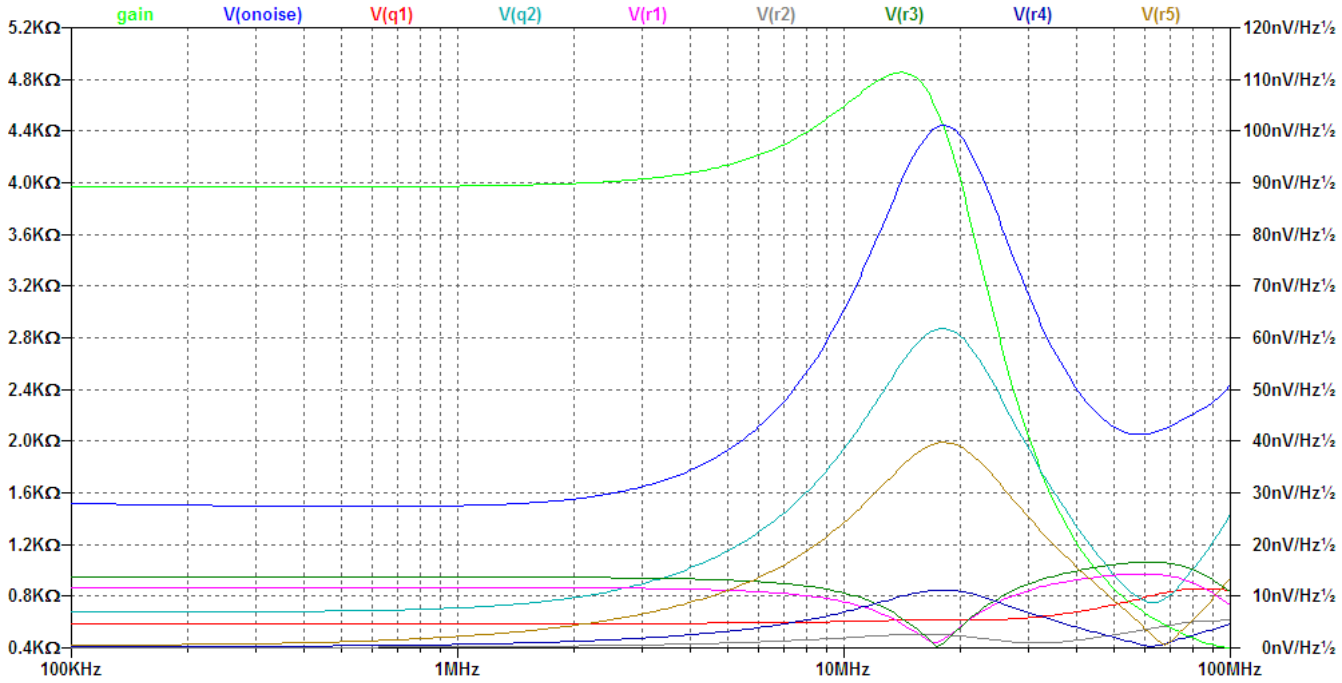
gain
V(onoise)
V(q1)
V(q2)
V(r1)
V(r2)
V(r3)
V(r4)
V(r5)
5.2KΩ
4.8KΩ
4.4KΩ
4.0KΩ
3.6KΩ
3.2KΩ
2.8KΩ
2.4KΩ
2.0KΩ
1.6KΩ
1.2KΩ
0.8KΩ
0.4KΩ
120nV/Hz½
110nV/Hz½
100nV/Hz½
90nV/Hz½
80nV/Hz½
70nV/Hz½
60nV/Hz½
50nV/Hz½
40nV/Hz½
30nV/Hz½
20nV/Hz½
10nV/Hz½
0nV/Hz½
100KHz
1MHz
10MHz
100MHz

PAMP8_4K. Model with gain 4 Kohm.

File pamp_4k.asc

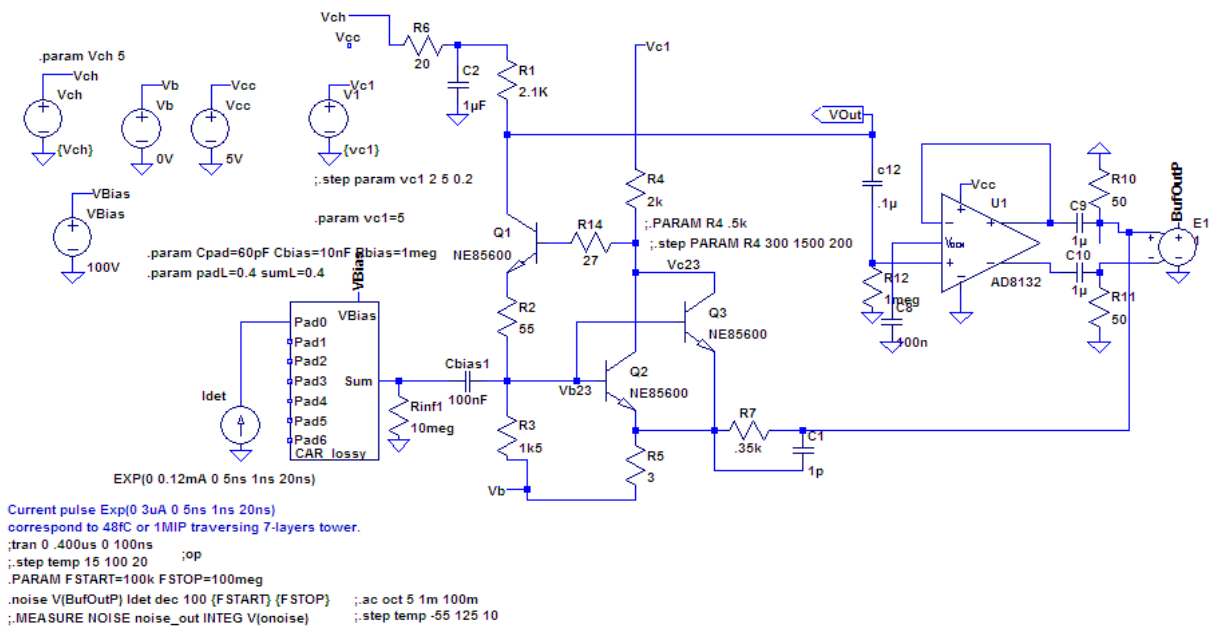

Fig. 12:

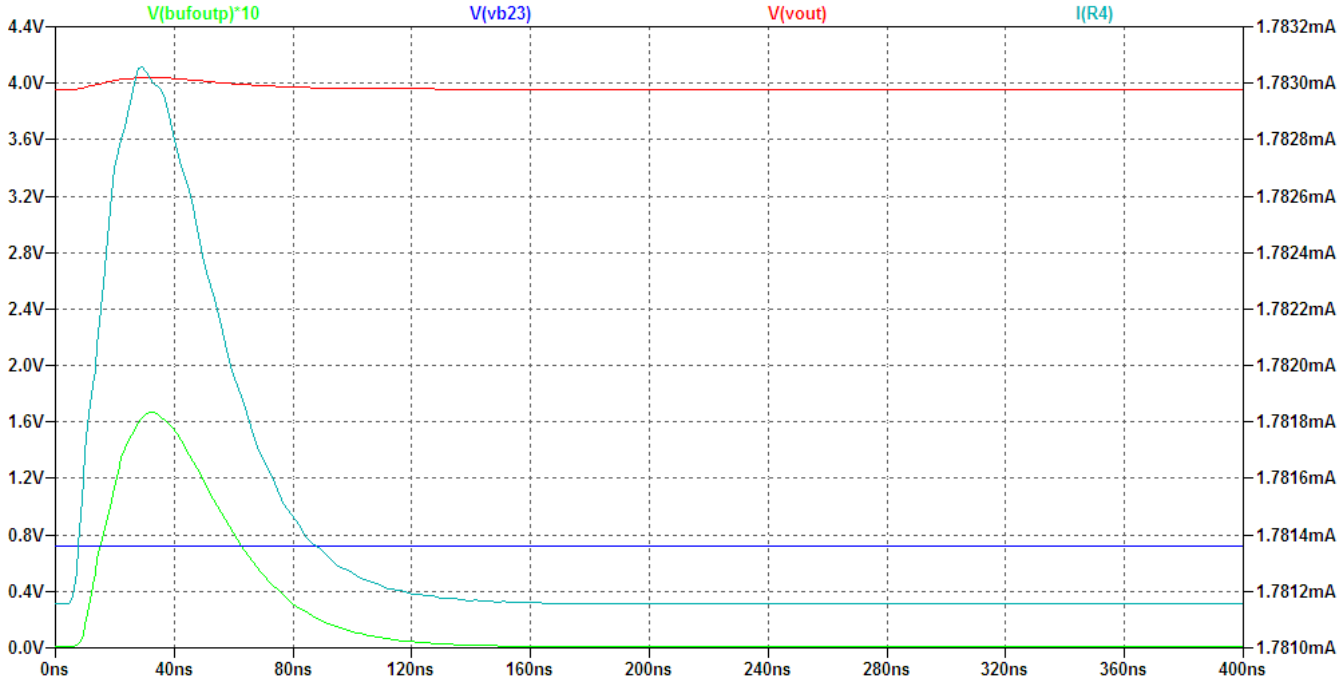

Fig. 13:

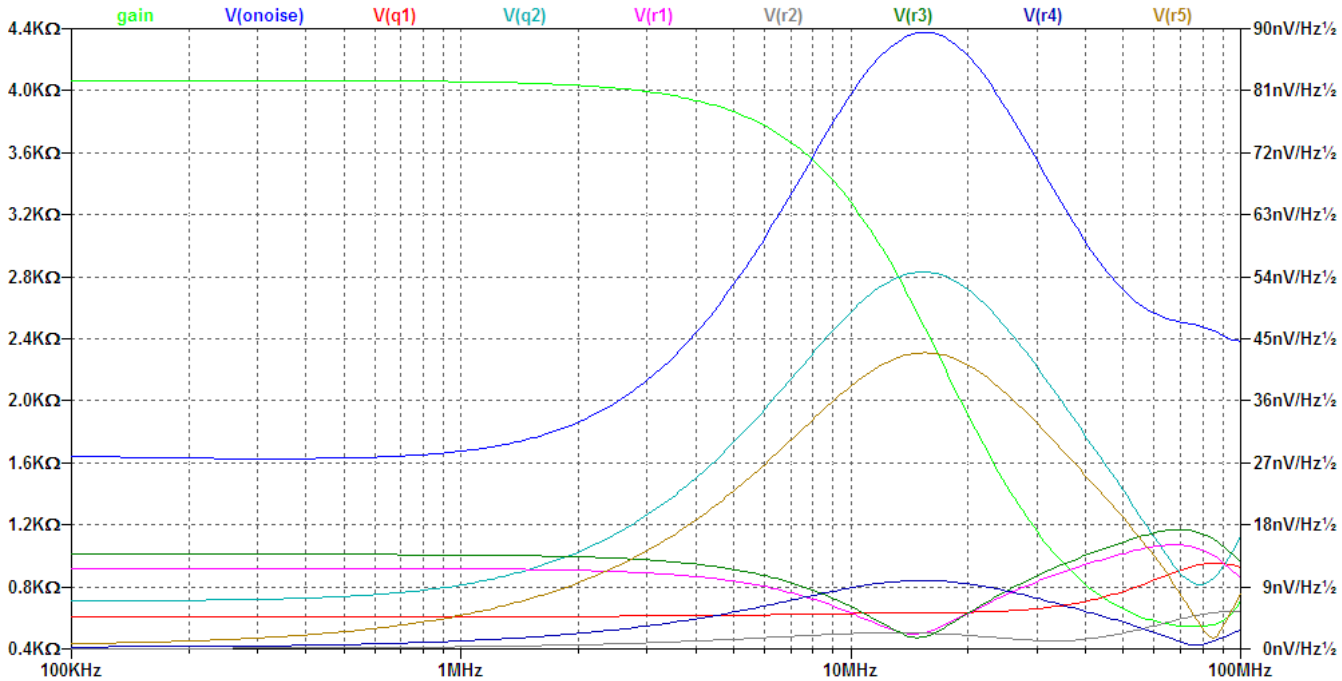

Fig. 14: The input noise in frequency range 0-3MHz is 14.1 nA (RMS = 53.2uV, gain @1MHz = 3.77KOhm). The RMS noise in frequency range 0-10MHz = 169uV - 3 times higher.

PAMP8_4K model for manufactured PCB

File pamp_4k_car_shaper.asc

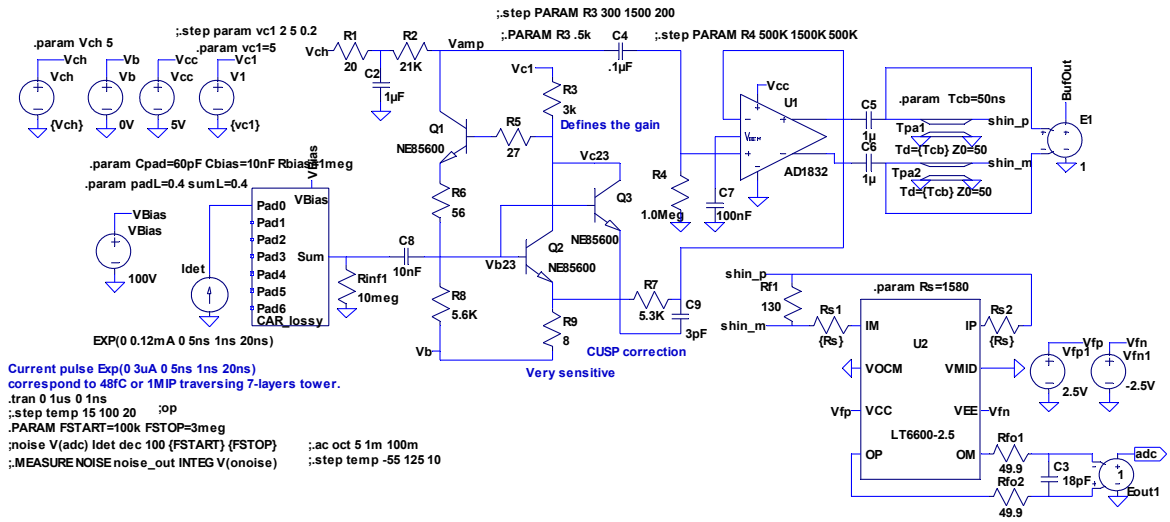

Fig. 15:

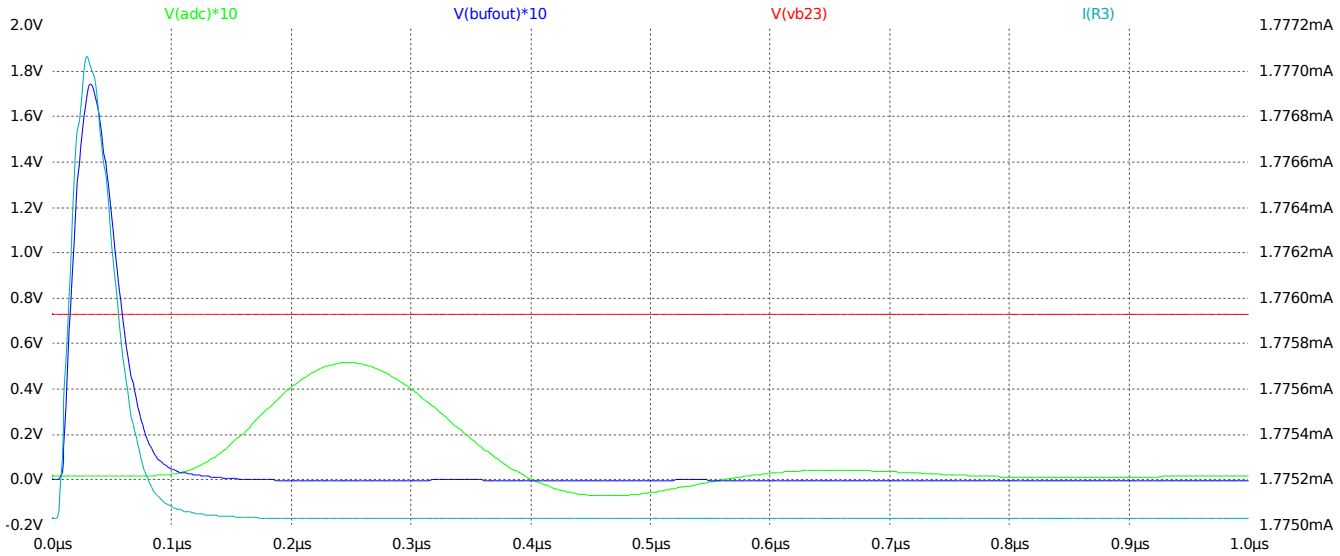

Fig. 16: Note the amplitude at ADC is about 3 times less than at BufOut, but the noise analysis shows the same gain of 3.74KOhm.

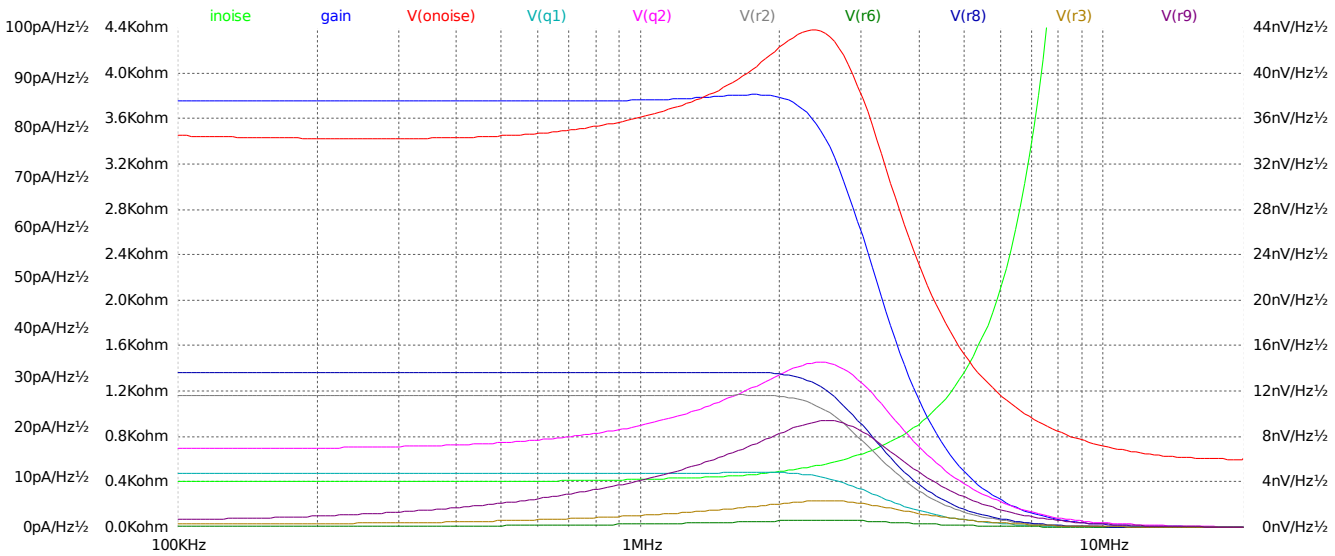

Fig. 17: Input noise = [0:3MHz]=19nA.

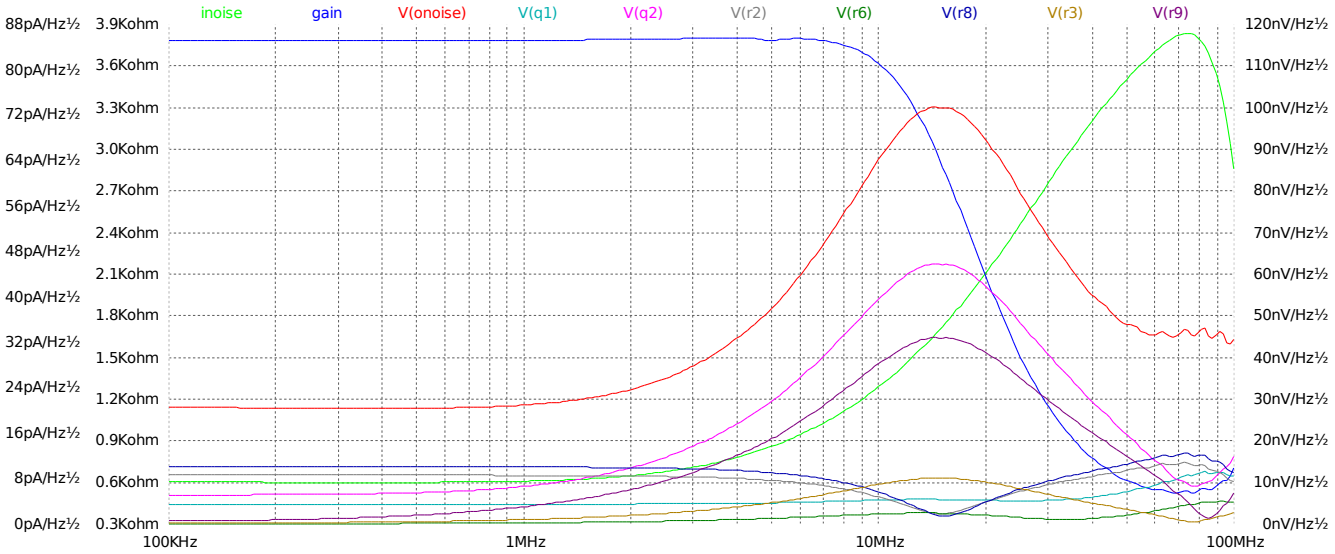

Fig. 18: Noise at the BufOut. Input noise [0:3MHz] = 14 nA, [0:10MHz] = 48 nA. RMS noise [0:10MHz] = 180uV.

The gain for noise analysis is calculated wrongly for LT6600-2.5. The amplitude at the output of the LT6600 is about 3 times smaller than at BufOut but it shows the same gain of 3.6KOhm as for BufOut. If I make the pulse longer then both amplitudes are equal, but that happens after 300ns.

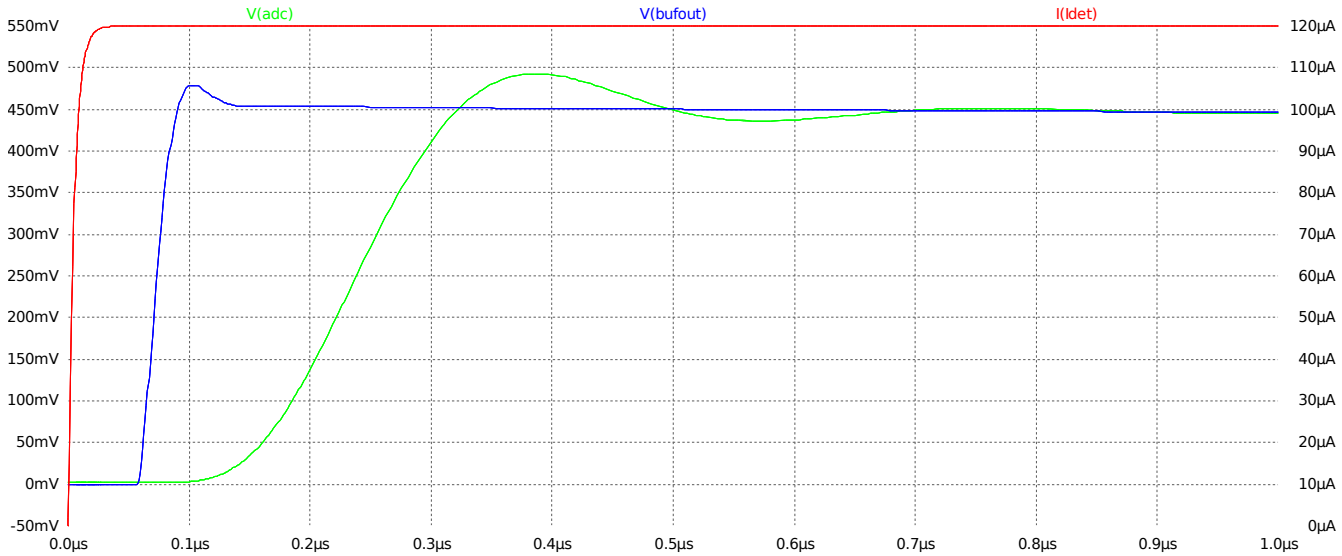

Fig. 19: Long input pulse. Note that amplitude at BufOut is 3 time higher than for the short pulses. That means that all my previous values of the gain were not correct.