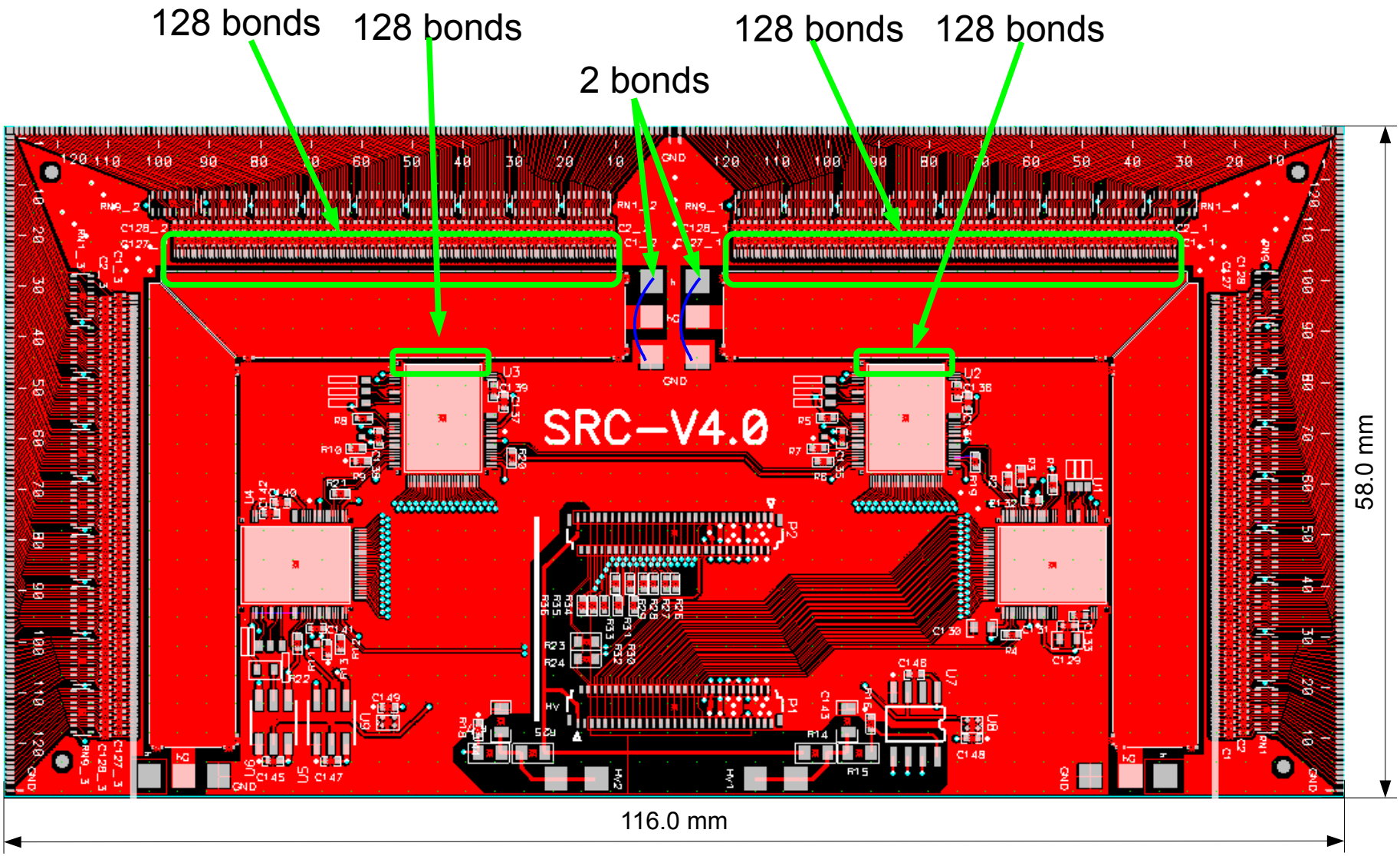Wire bonding pattern for pitch adapters on SRC