# DAUGHTERBOARD CONNECTORS

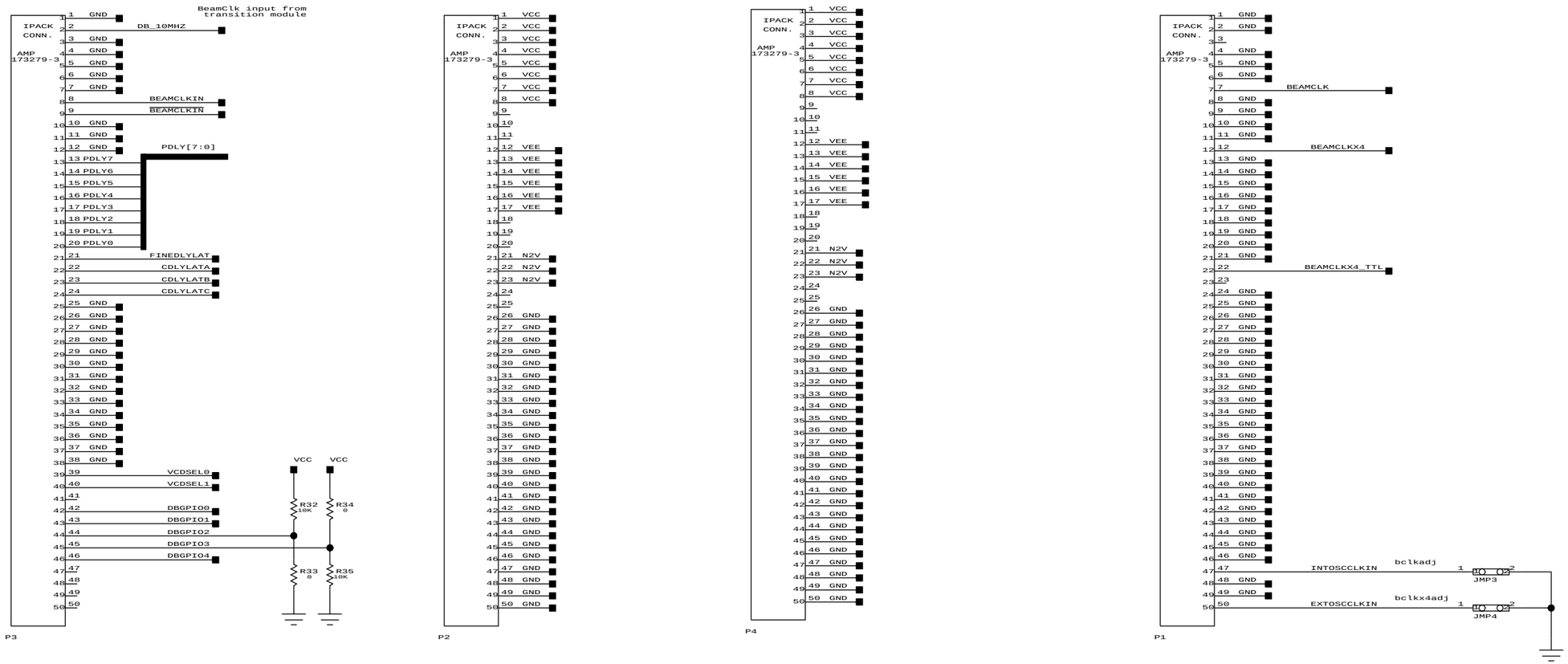


DBGPIO0 = invert clk : 0=non-inverting 1=inverting
DBGPIO1 = clock sel : 0=internal, 1=external
DBGPIO2 = board ID
DBGPIO3 = board ID
DBGPIO4 = PLL lock : 1=locked 0=not locked

VIEWlogic

GRANULE TIMING MODULE
DB INTERFACE: DLYWPLL

| J. MEAD | REV B | 2/15/2000 | PAGE 1 OF 4 |
|---|---|---|---|

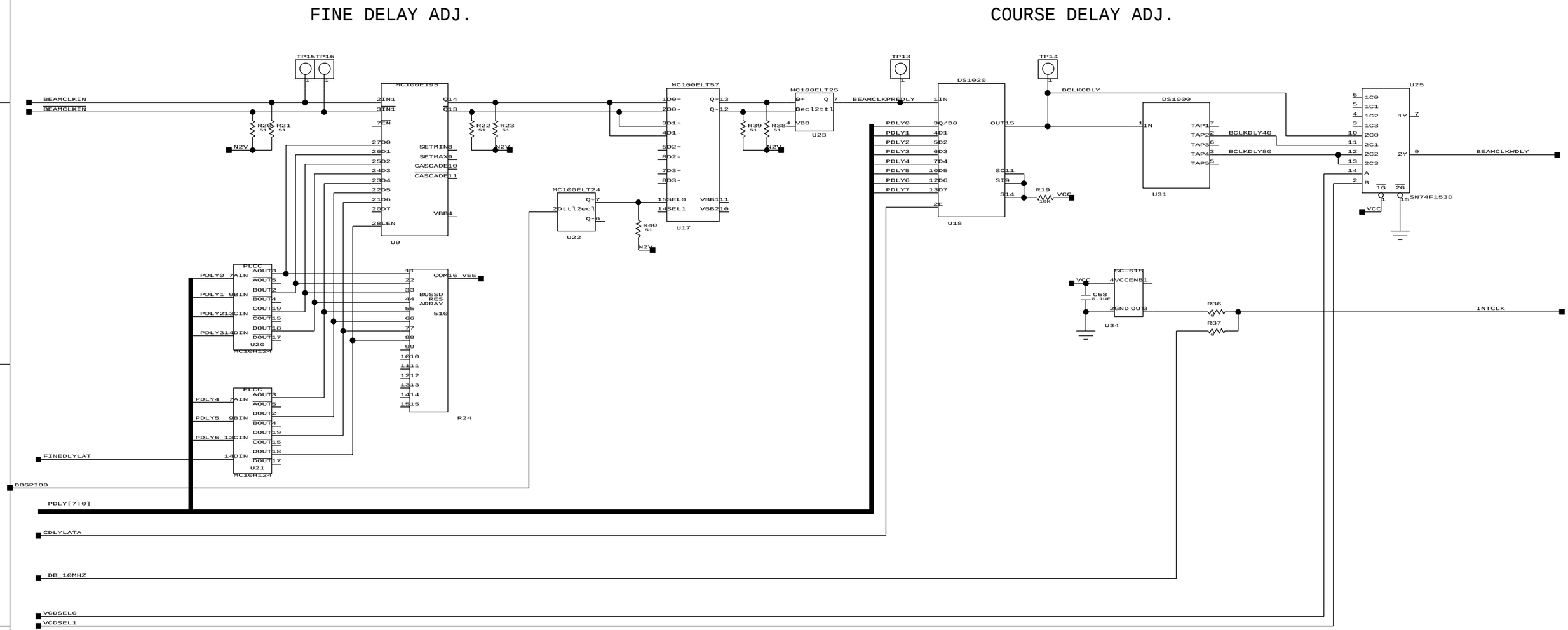


VIEWlogic

GRANULE TIMING MODULE
DB INTERFACE: DLYWPLL

| J. MEAD | REV B 2/15/2000 | PAGE 2 OF 4 |
|---|---|---|

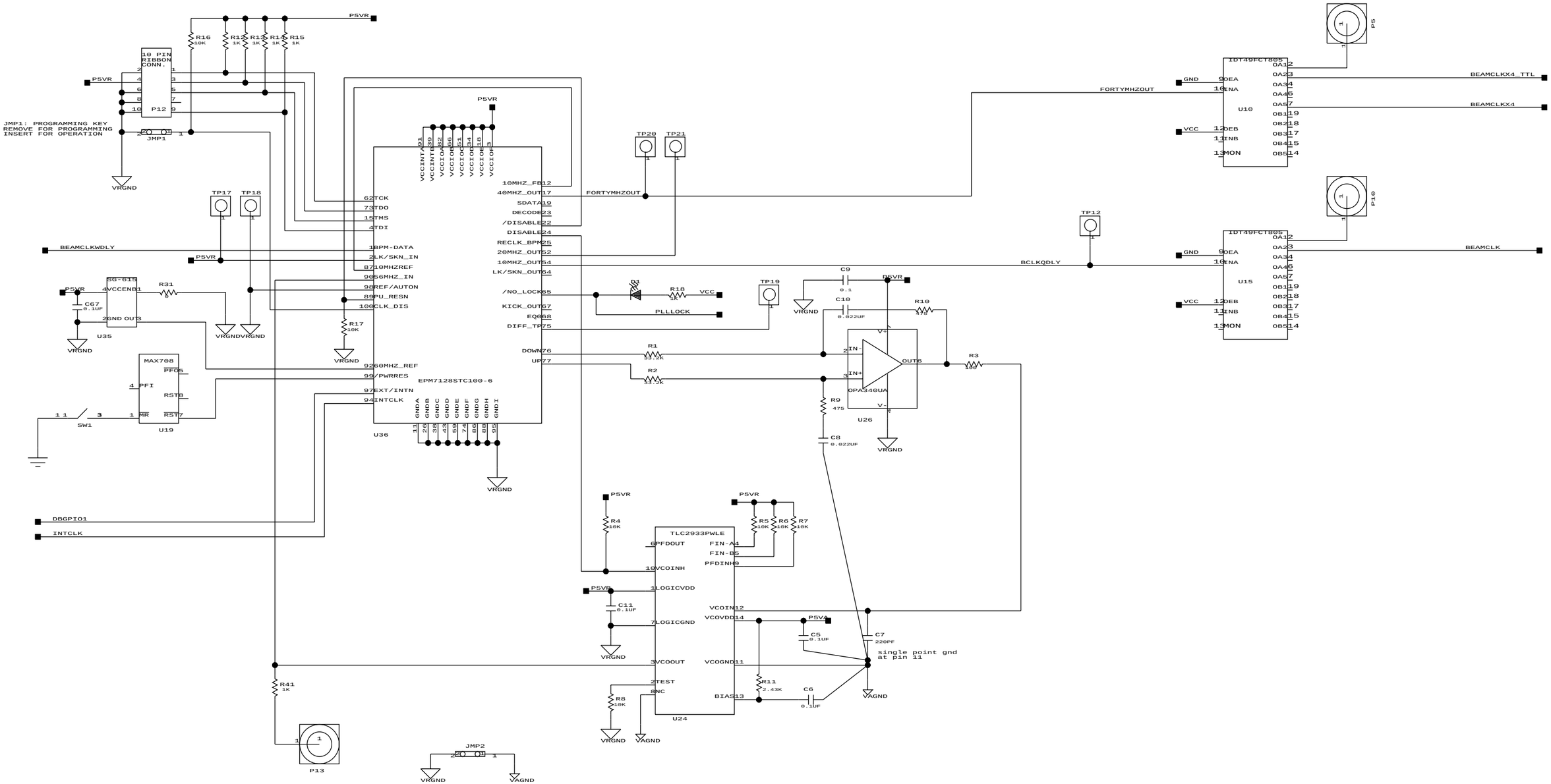


VIEWlogic

GRANULE TIMING MODULE
DB INTERFACE: DLYWPLL

| J. MEAD | REV B | 2/15/2000 | PAGE 3 OF 4 |
|---|---|---|---|

# POWER REGULATION

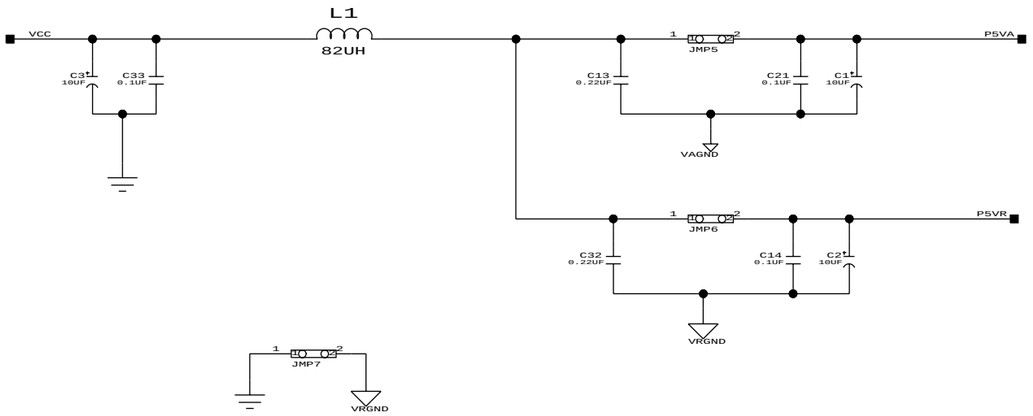


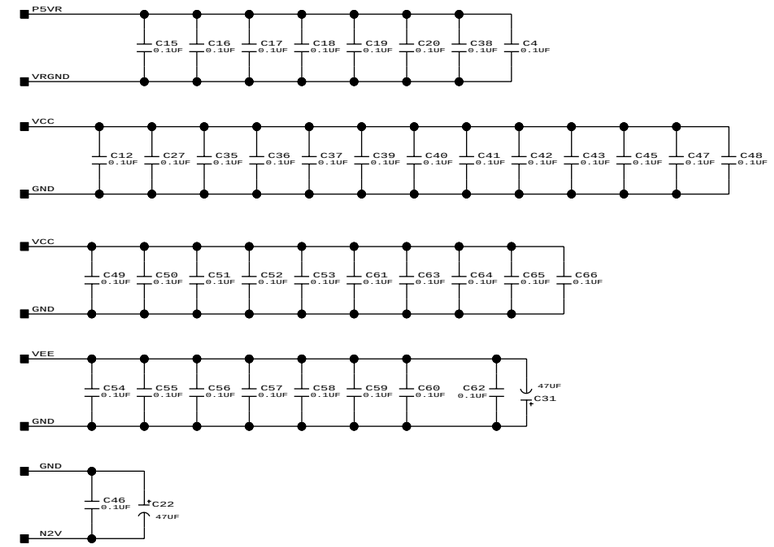


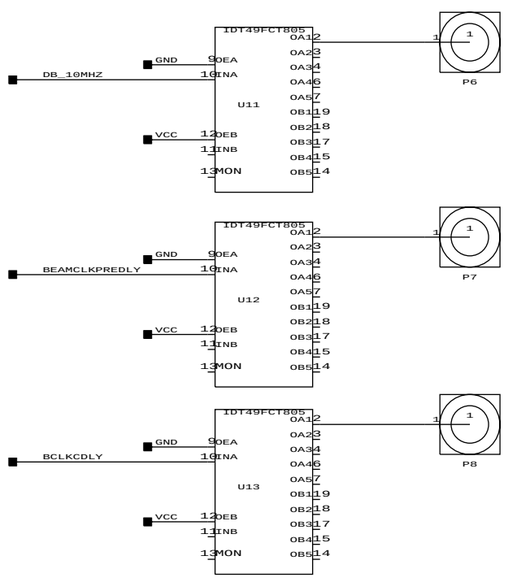


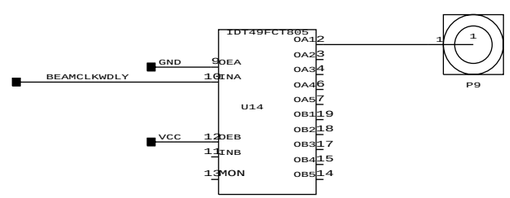


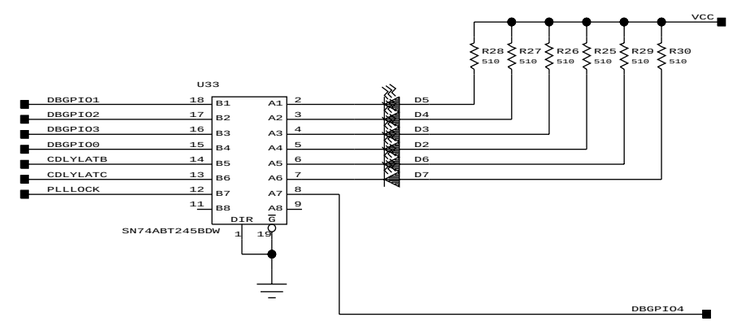


VIEWlogic

GRANULE TIMING MODULE
DB INTERFACE: DLYWPLL

| J. MEAD | REV B | 2/15/2000 | PAGE 4 OF 4 |
|---|---|---|---|