VME64X CONNECTOR P2

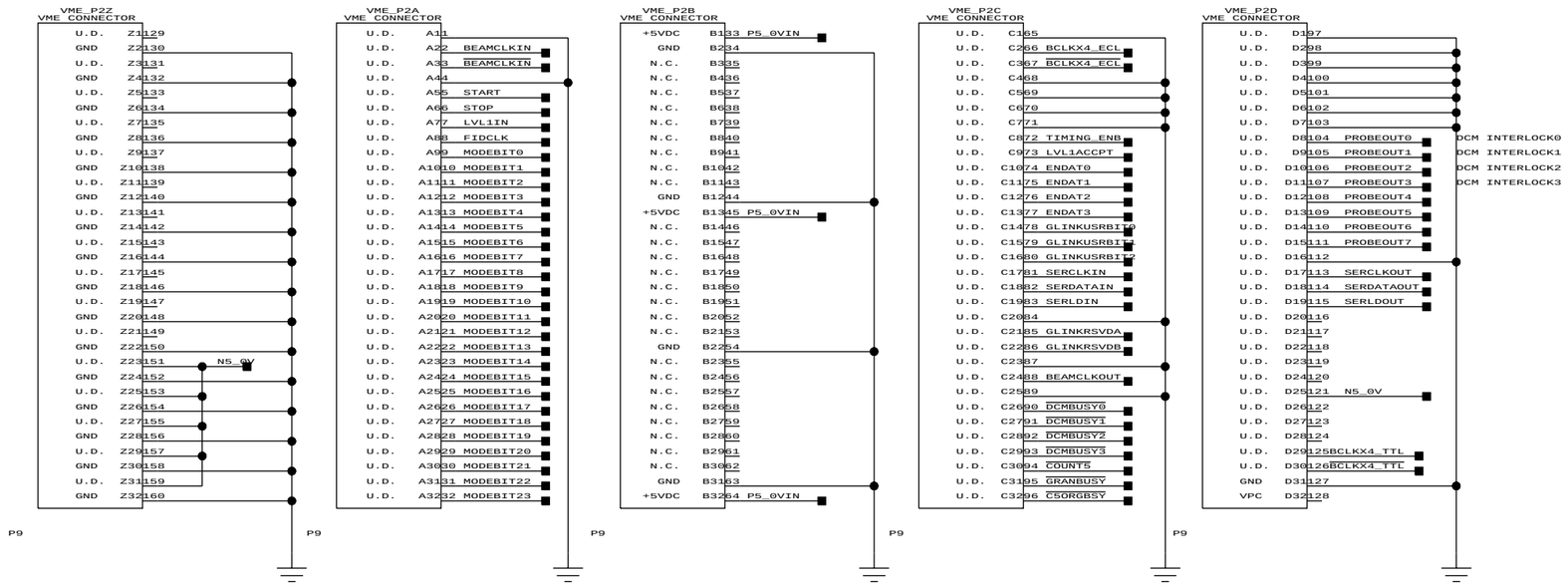

VME 96PIN CONNECTOR P3

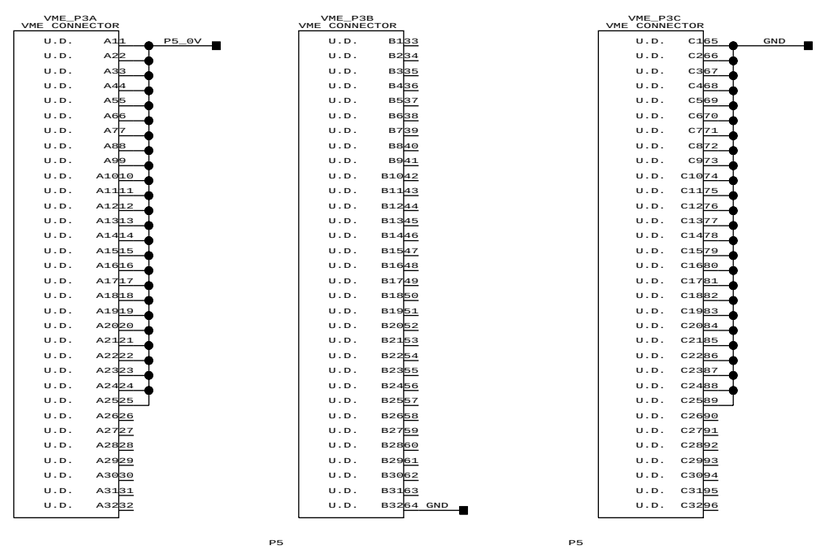

VIEWlogic

GRANULE TIMING FANOUT BOARD

J. MEAD	REV C	9/22/1999	PAGE 1 OF 7

Master Timing Inputs

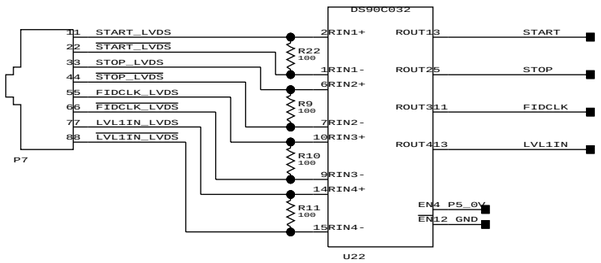

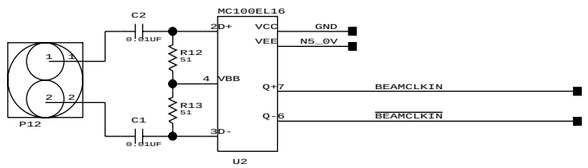

Global Level 1 Outputs

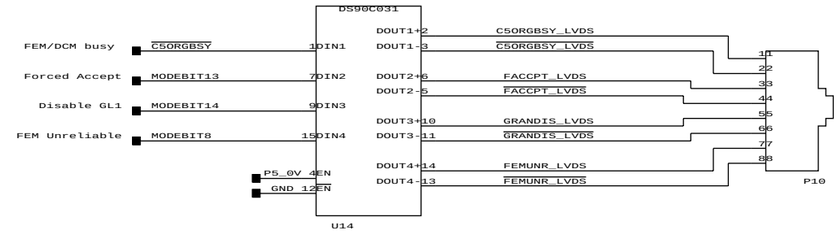

BeamClkx4 Driver

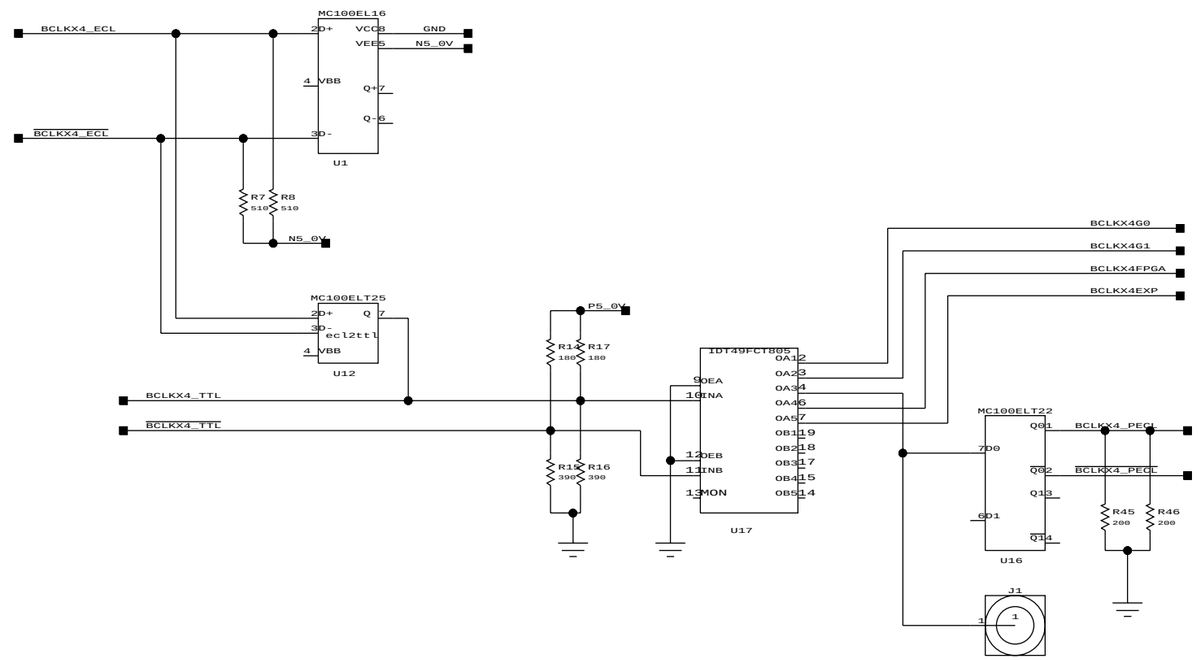

Granule Busy Inputs

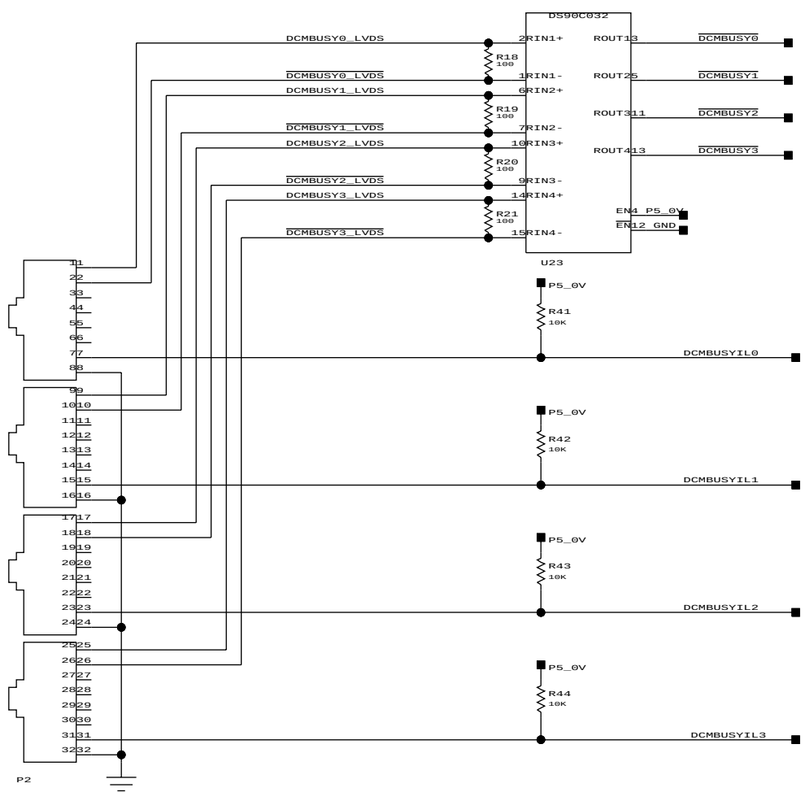

VIEWlogic™

GRANULE TIMING FANOUT BOARD

J. MEAD	REV C	9/22/1999	PAGE 2 OF 7

Local Level 1 Mode Bits

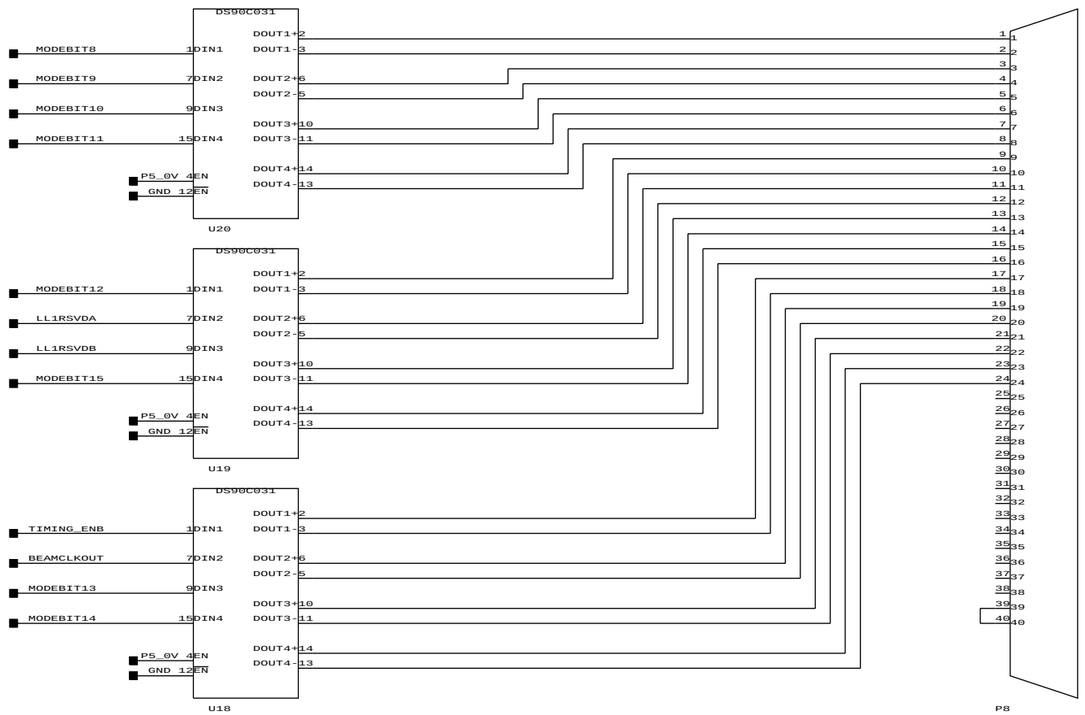

VIEWlogic

GRANULE TIMING FANOUT BOARD

J. MEAD	REV C 9/22/1999	PAGE 3 OF 7

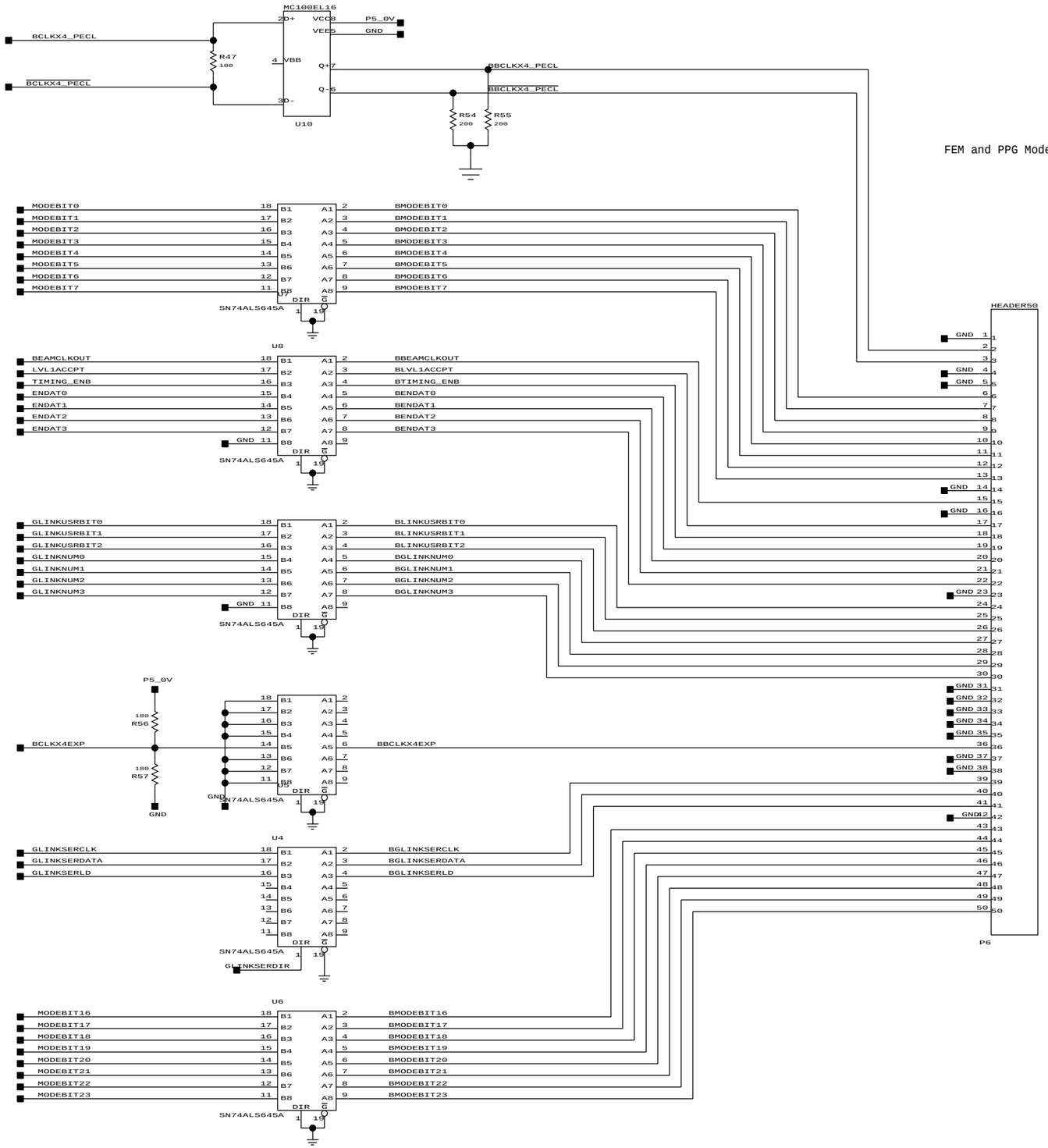

VIEWlogic

GRANULE TIMING FANOUT BOARD

J. MEAD	REV C	9/22/1999	PAGE 4 OF 7

GLINK Connector : SLOT 0

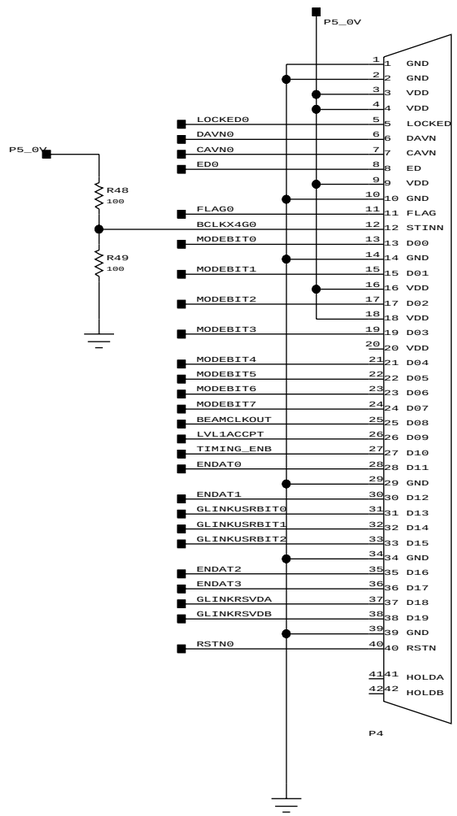

GLINK Connector : SLOT1

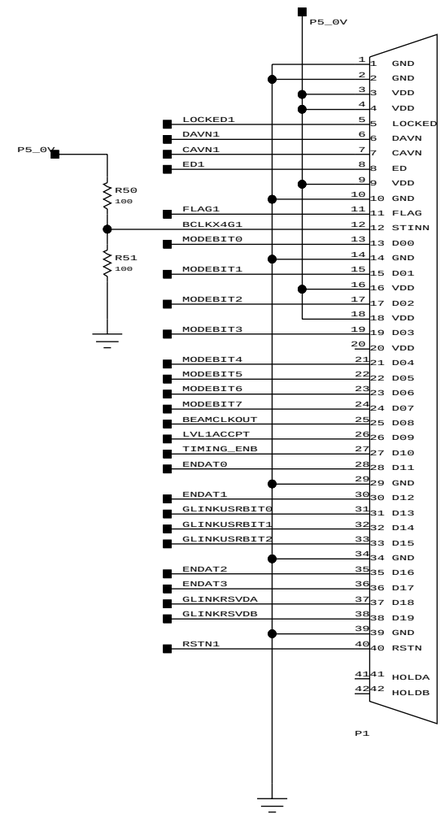

VIEWlogic

GRANULE TIMING FANOUT BOARD

J. MEAD	REV C	9/22/1999	PAGE 5 OF 7

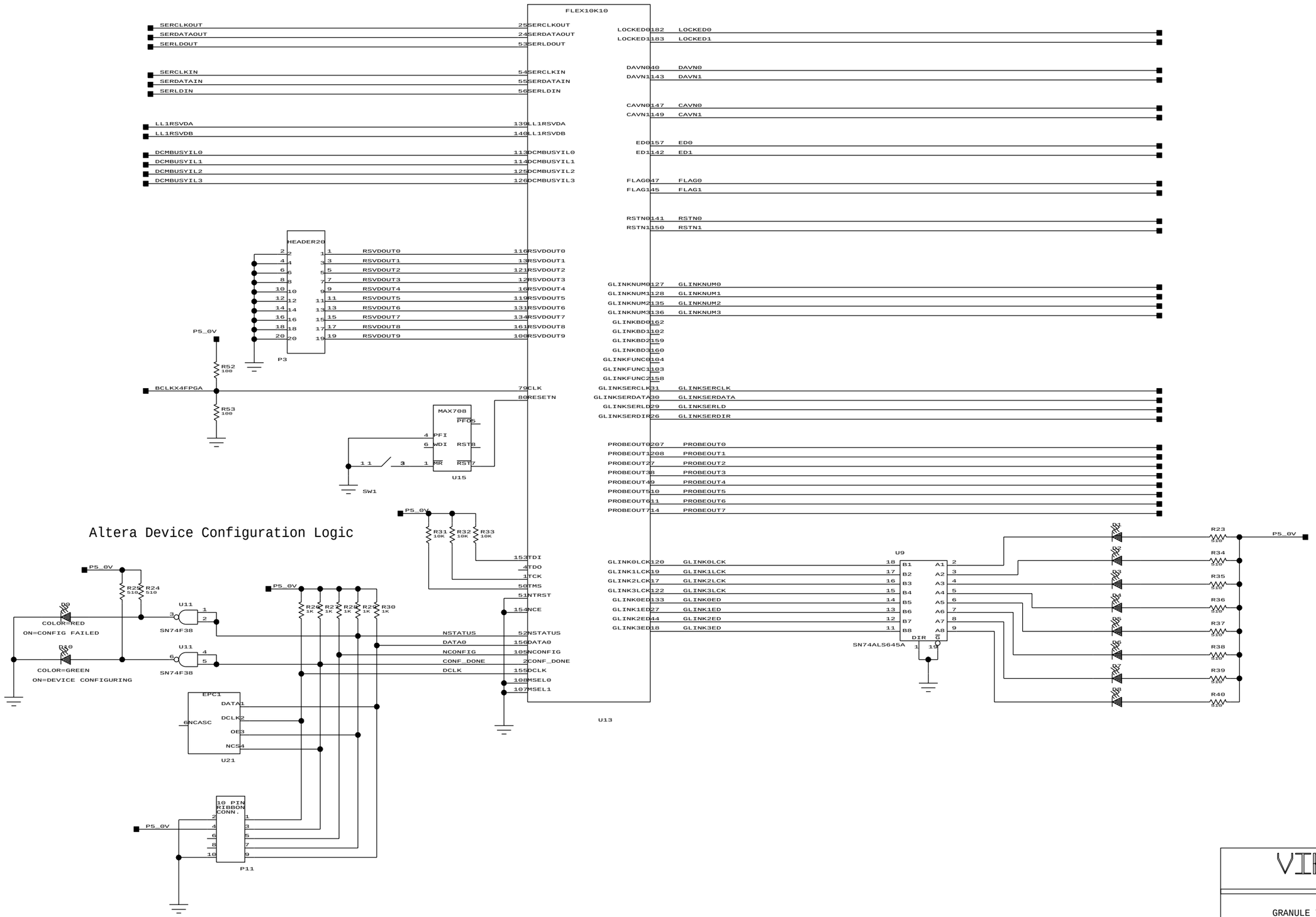

VIEWlogic

GRANULE TIMING FANOUT BOARD

J. MEAD	REV C	9/22/1999	PAGE 6 OF 7

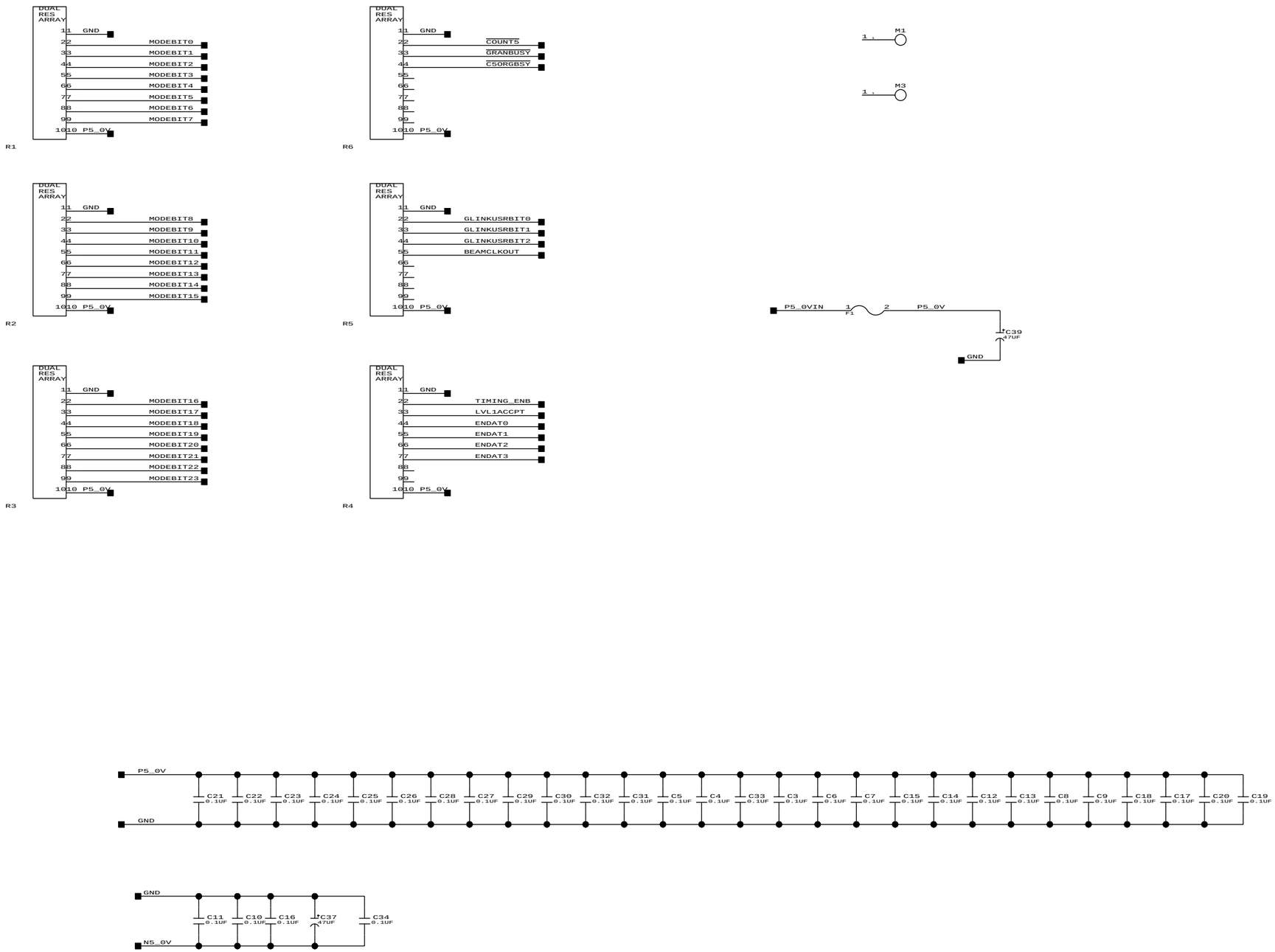

VIEWlogic

GRANULE TIMING FANOUT BOARD

J. MEAD	REV C	9/22/1999	PAGE 7 OF 7