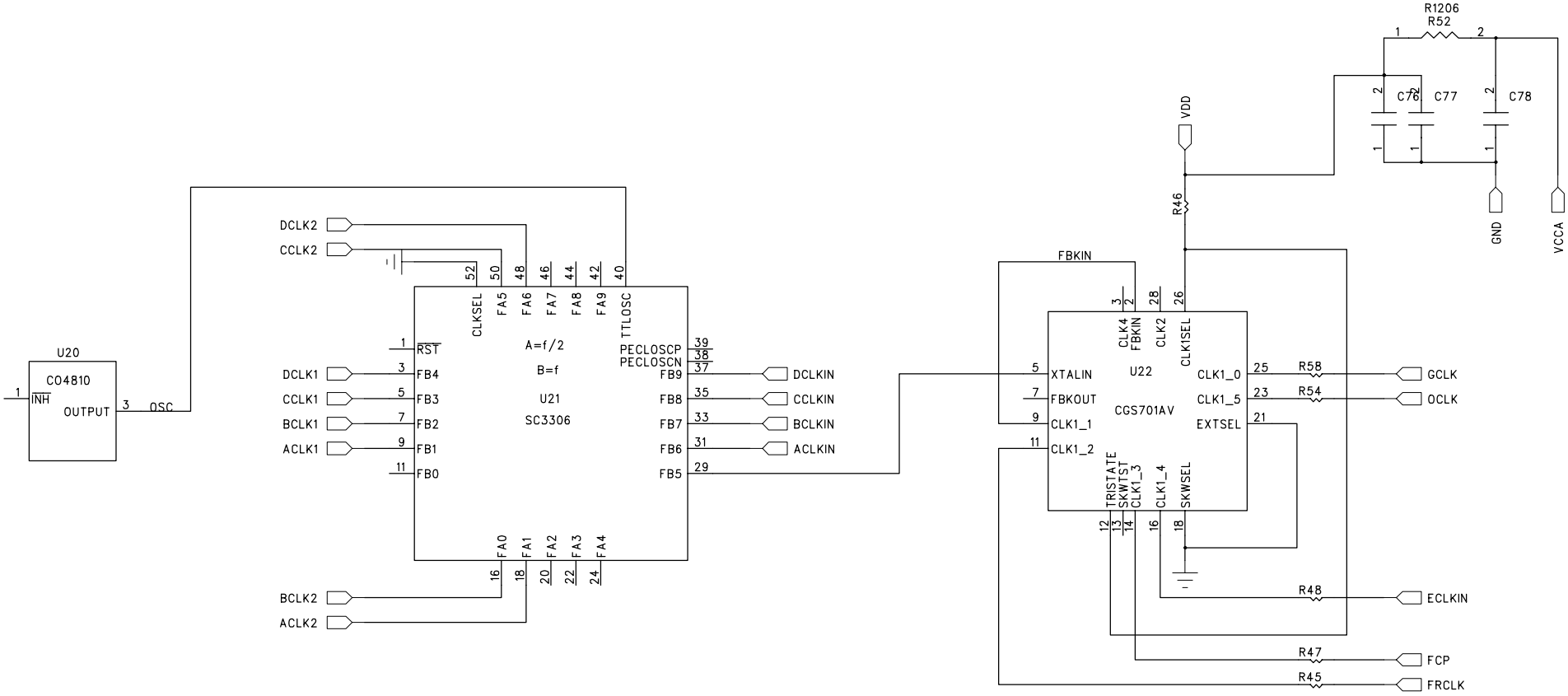
U20
CO4810
INH
OUTPUT
OSC
DCLK2
CCLK2
CLKSEL
FA5
FA6
FA7
FA8
FA9
TTLOSC
RST
A=f/2
B=f
U21
SC3306
DCLK1
CCLK1
BCLK1
ACLK1
FB4
FB3
FB2
FB1
FB0
PECLOSCP
PECLOSCN
FB9
FB8
FB7
FB6
FB5
DCLKIN
CCLKIN
BCLKIN
ACLKIN
FA0
FA1
FA2
FA3
FA4
BCLK2
ACLK2
FBKIN
CLK4
FBKIN
CLK2
CLK1SEL
XTALIN
FBKOUT
CLK1_1
CLK1_2
U22
CGS701AV
CLK1_0
CLK1_5
EXTSEL
TRISTATE
SKWTST
CLK1_3
CLK1_4
SKWSEL
R46
VDD
R1206
R52
C76
C77
C78
GND
VCCA
R58
R54
GCLK
OCLK
R48
ECLKIN
R47
FCP
R45
FRCLK