ECS13 - PbGl

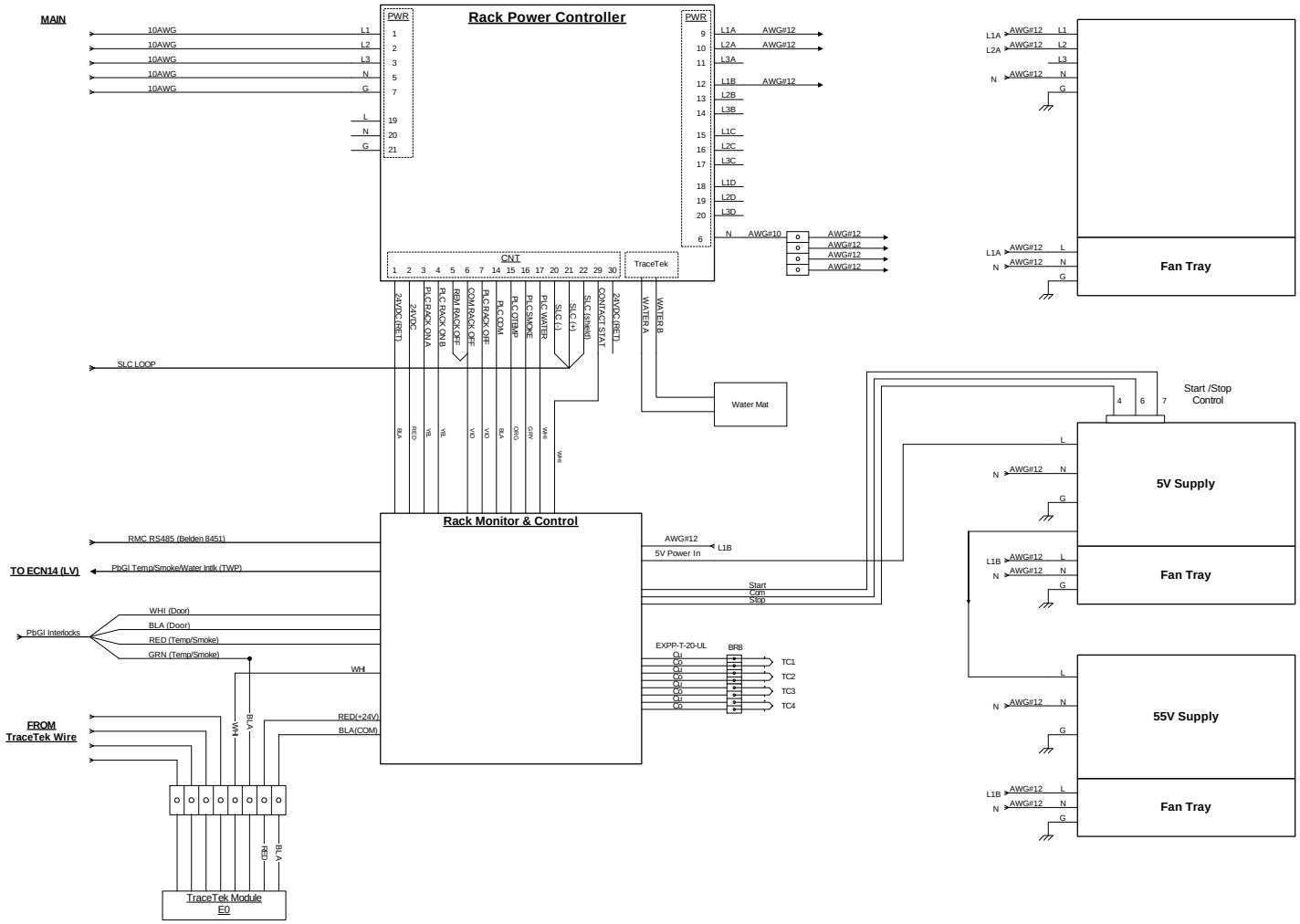

PHOENIX

Electronics Rack Interconnect

Engr: S.Boose	SIZE C	FSCM NO	DWG NO RMC-ECS13.VSD	REV A
Revised 4/12/00	SCALE 1 : 1		SHEET 1 OF 2	

ECS13 RMC Panel

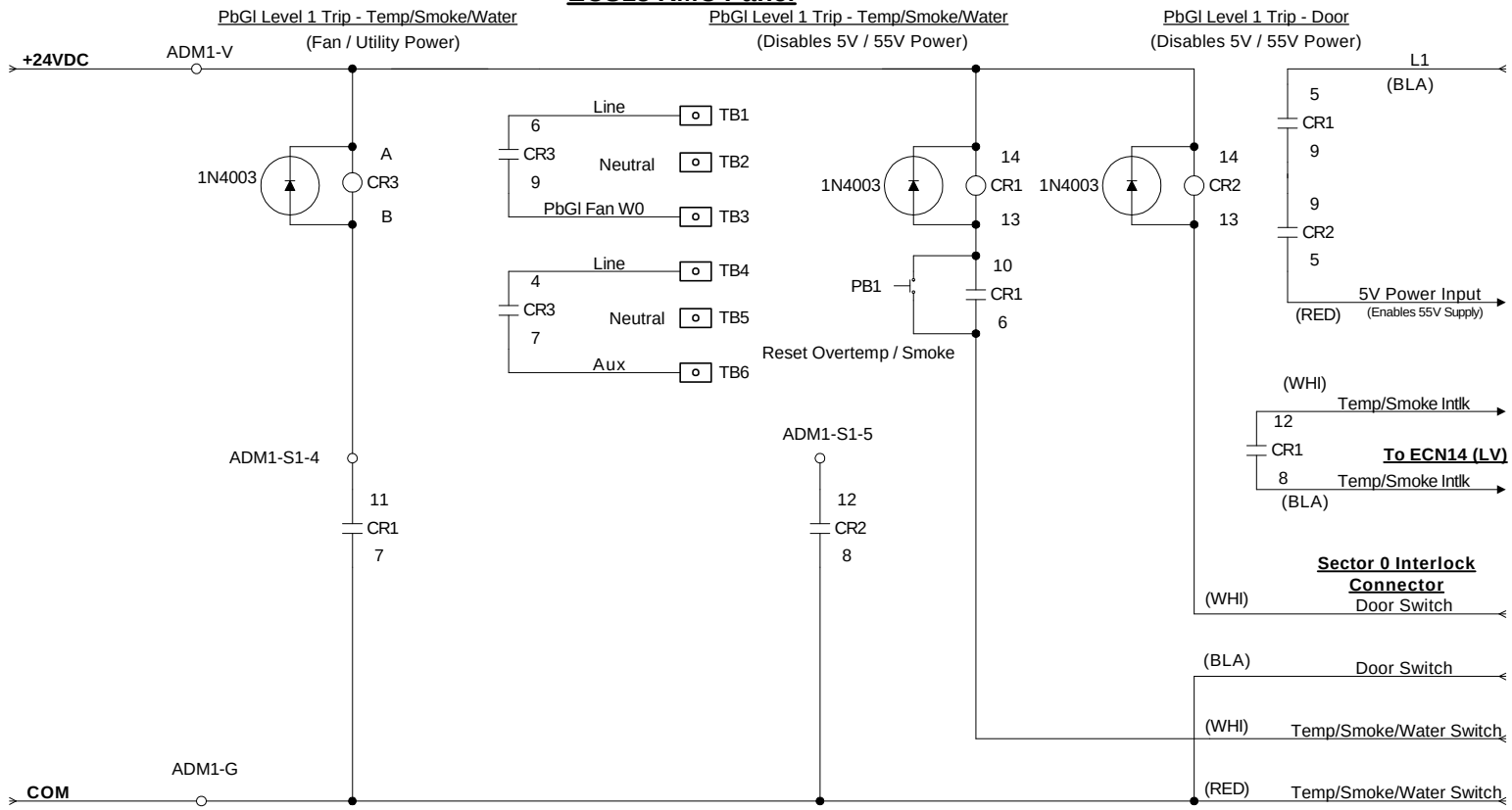

Notes:

1. Relays are idec RH4B-UDC24V
2. Use idec SH4B-05 DIN-Rail sockets
3. Use idec SH4B-02F1 holdown springs
4. CR3 is Seimens RM805024

PHOENIX

Rack Monitor & Control Interlock Logic

Engr: S.Boose	SIZE A	FSCM NO	DWG NO RMC-ECS13.VSD	REV A
Revised 4/12/00	SCALE 1 : 1		SHEET 2 OF 2	