LVHP Variant "CD"

3/26/01

MVD Digital - 2 Slots

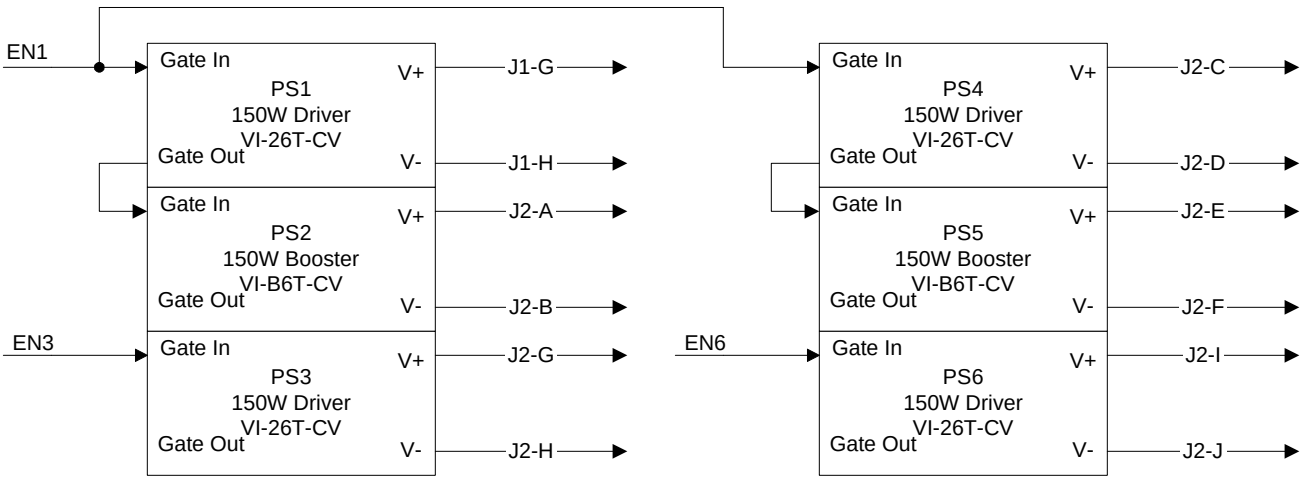
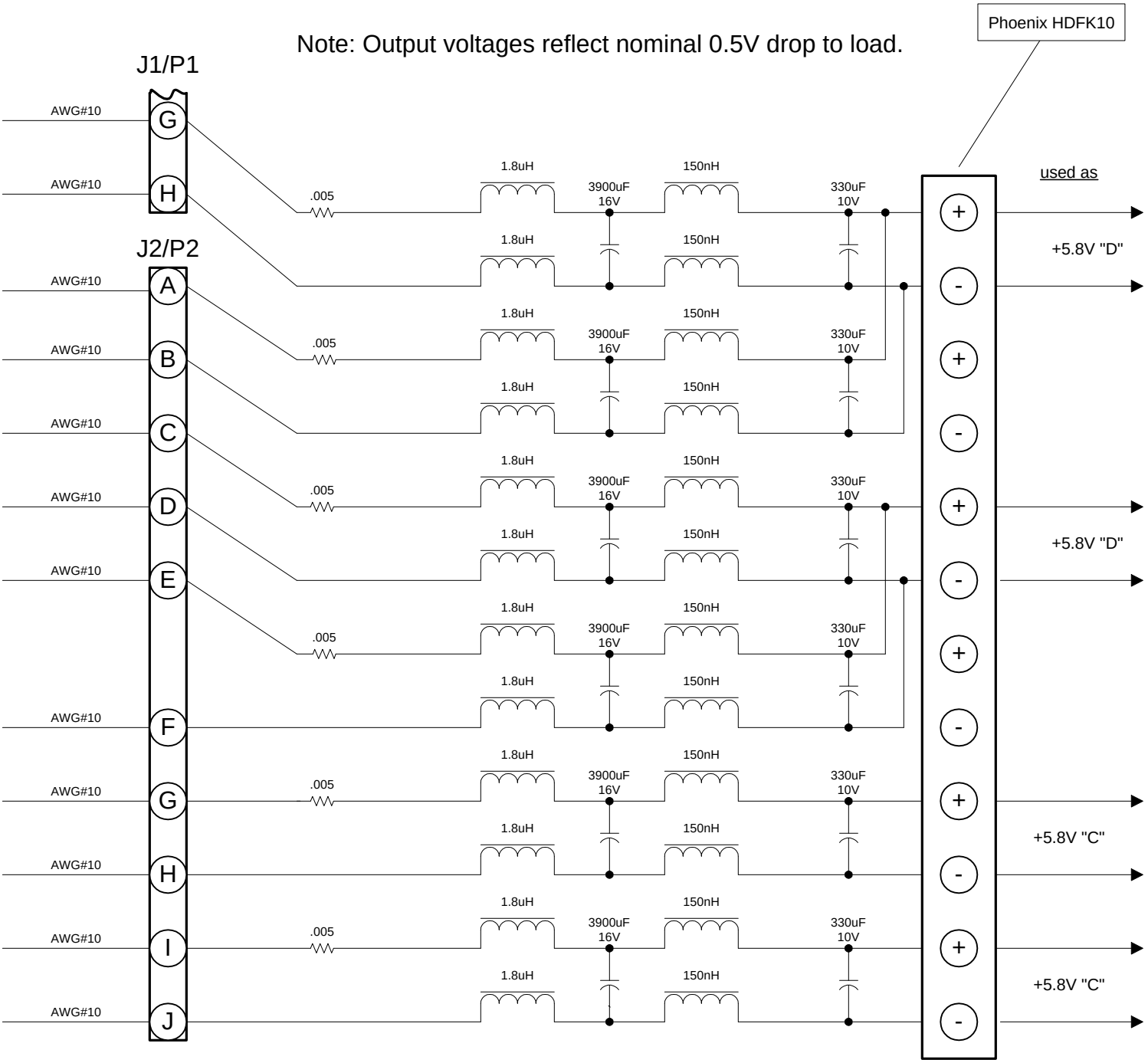
Note: Output voltages reflect nominal 0.5V drop to load.