THIS DRAWING IS UNPUBLISHED. RELEASED FOR PUBLICATION ,19 .
(C) COPYRIGHT 19 BY AMP INCORPORATED. ALL RIGHTS RESERVED.

DOC	DIST
CM	53

REVISIONS

P	LTR	DESCRIPTION	DATE	DWN	APVD
	L	REV PER EC 0G1B-0127-98	6-22-98	BL	RS

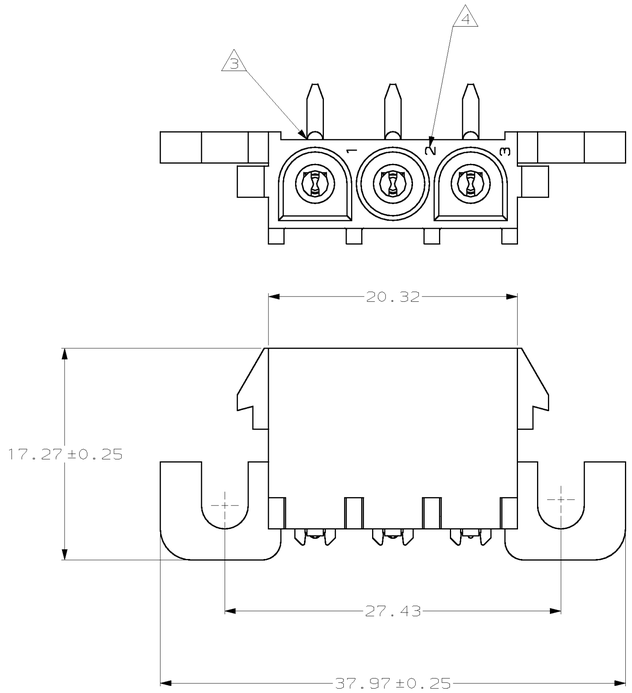

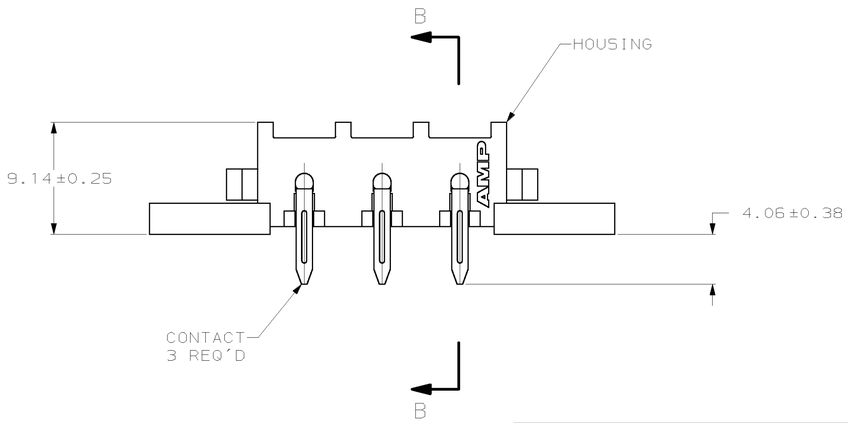

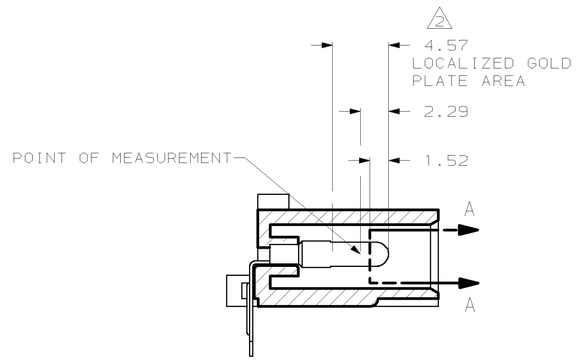

SECTION B–B

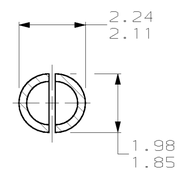

SECTION A–A
SCALE 10:1

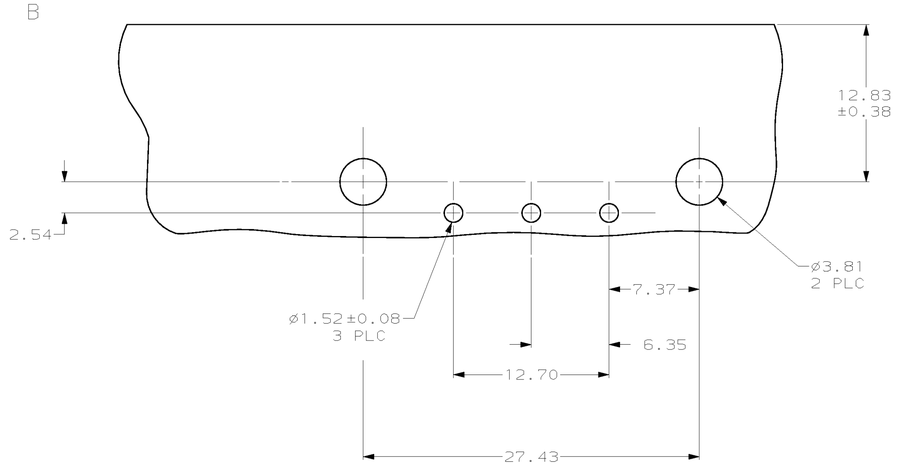

RECOMMENDED MOUNTING HOLE PATTERN
FOR 1.57 THICK P.C. BOARD

1. PARTS COMPLY WITH AMP SOLDERABILITY SPECIFICATION 109-11-5.

2. CONTACT IS PLATED OVERALL WITH 0.00127 MIN NICKEL, THEN 0.00076 GOLD OVER CONTACT LENGTH INDICATED AND MATTE TIN FINISH ON SOLDER TAIL END.

3. OPTIONAL CONSTRUCTION MAY DELETE THIS RIB.

4. CIRCUIT IDENTIFICATION CHARACTERS ARE ADJACENT TO THE INDICATED CAVITIES, BUT LOCATION AND ORIENTATION MAY DIFFER FROM PRINT.

2.29	.090	37.97	1.495
2.24	.088	27.43	1.080
2.11	.083	20.32	.800
1.98	.078	17.27	.680
1.85	.073	12.83	.505
1.57	.062	12.70	.500
1.52	.060	9.14	.360
0.38	.015	7.37	.290
0.25	.010	6.35	.250
0.13	.005	4.57	.180
0.08	.003	4.06	.160
.00127	.000050	3.81	.150
.00076	.000030	2.54	.100
MM	IN	MM	IN

CONVERSION TABLE

CONTACT	HOUSING	PART NUMBER
PH BRZ GOLD, 2	NYLON UL 94V-0	2-350943-0
PH BRZ PRE-TIN	NYLON UL 94V-0	1-350943-0

THIS DRAWING IS CONSIDERED PART OF THE DOCUMENT. IT IS SUBJECT TO CHANGE AND THE CONTROLLING ENGINEERING ORGANIZATION SHOULD BE CONTACTED FOR THE LATEST REVISION.

DIMENSIONS: mm

TOLERANCES (UNLESS OTHERWISE SPECIFIED)
0 PLC ±–
1 PLC ±–
2 PLC ±0.13
3 PLC ±–
4 PLC ±–
ANGLES ±–

MATERIAL SEE TABLE
FINISH SEE TABLE

DWN B. LEWIS 4-13-98
CHK R. SWING 4-13-98
APVD K. COBLE 4-13-98
PRODUCT SPEC —
APPLICATION SPEC —
WEIGHT —

CUSTOMER DRAWING

AMP Incorporated
Harrisburg, PA 17105-3608

NAME PIN HEADER ASSEMBLY, RIGHT ANGLE MOUNT, 3 POSITION, UNIVERSAL MATE-N-LOK™

SIZE	CAGE CODE	DRAWING NO
A1	00779	C-350943

SCALE	SHEET	OF	REV
4:1	1	1	L

METRIC

AMP 4805 REV 10/93