PHENIX EMCAL
Front End Electronics

Jim Walker
Oak Ridge National Laboratory

November 22, 1996

EMCAL Specifications

- PbSc: ~10,000 total PMT channels
- PbGl: ~15,000 total PMT channels
- 144 PMT input chan / FEM
- 3 types of data / chan

  Energy ----------> DCM

  Timing ----------> DCM

  Trigger Sums ----> LVL-1

EMCAL Key Specifications

- Charge:
  - 0 to 500 pC, 11-bit resolution (14 bit dynamic range)
  - 31 fC least count, <1% INL, 1 LSB noise
- Timing:
  - 100 ns range, 50ps least count
  - < 150 ps rms jitter, < 0.5% INL
- Trigger Sum:
  - 16 channel sum, 500 pC Max.
  - 3 discriminators / 16 channel sum
  - flash convert 144 sum to 8 bits

EMCAL Channel Block Diagram

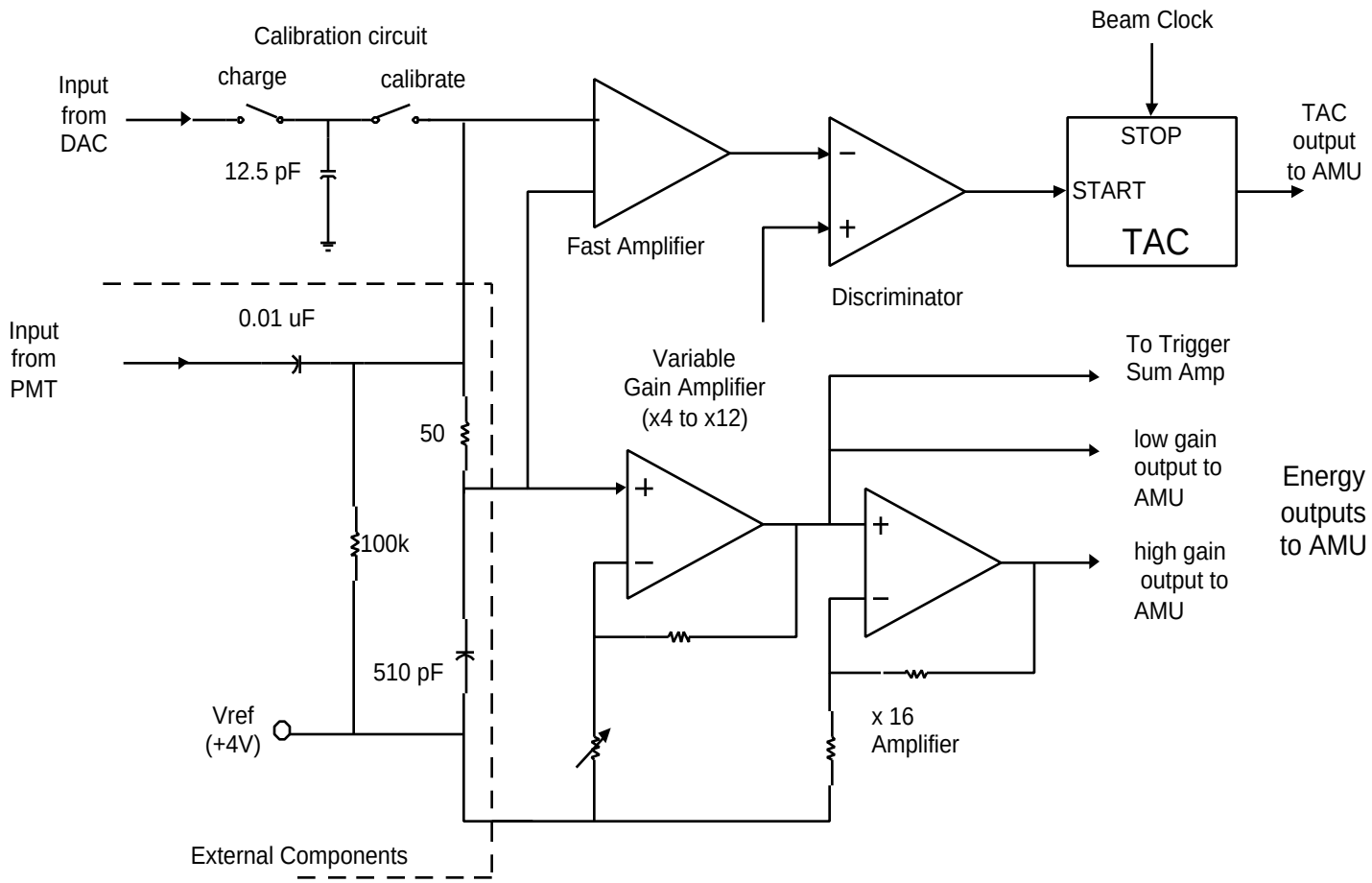

EMCAL FEE Block Diagram

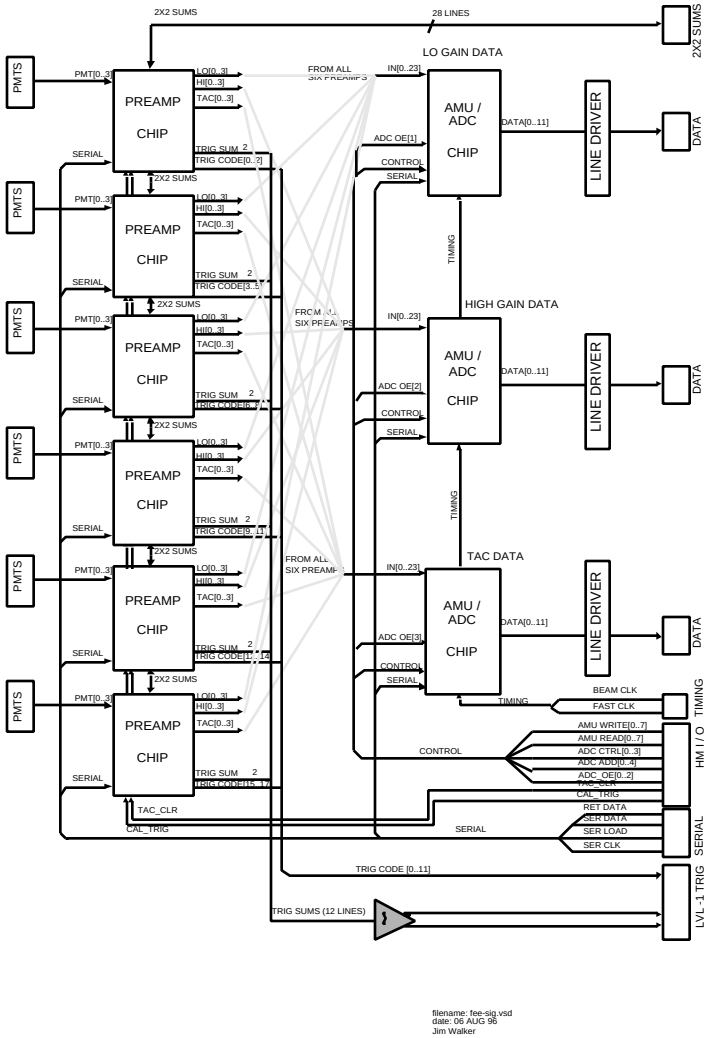

- 24 PMT inputs via coax ribbon cable.
- 6 Preamplifier ASICs
- 3 AMU / ADC ASICs
  - 1 for Timing
  - 1 for Hi gain Energy
  - 1 for Lo gain Energy
- Simultaneous readout of ADCs ASICs for faster data processing.
- ASICs are soldered to board. No sockets.

EMCAL FEM Block Diagram

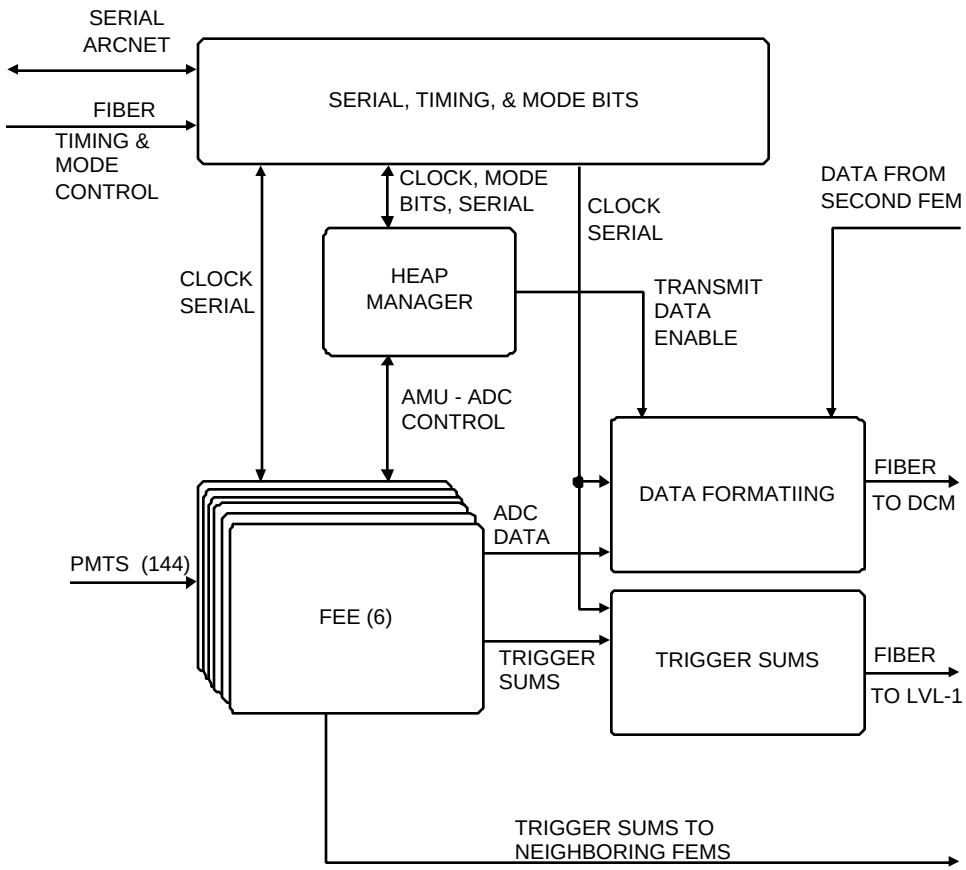

EMCAL Trigger Sum Pattern

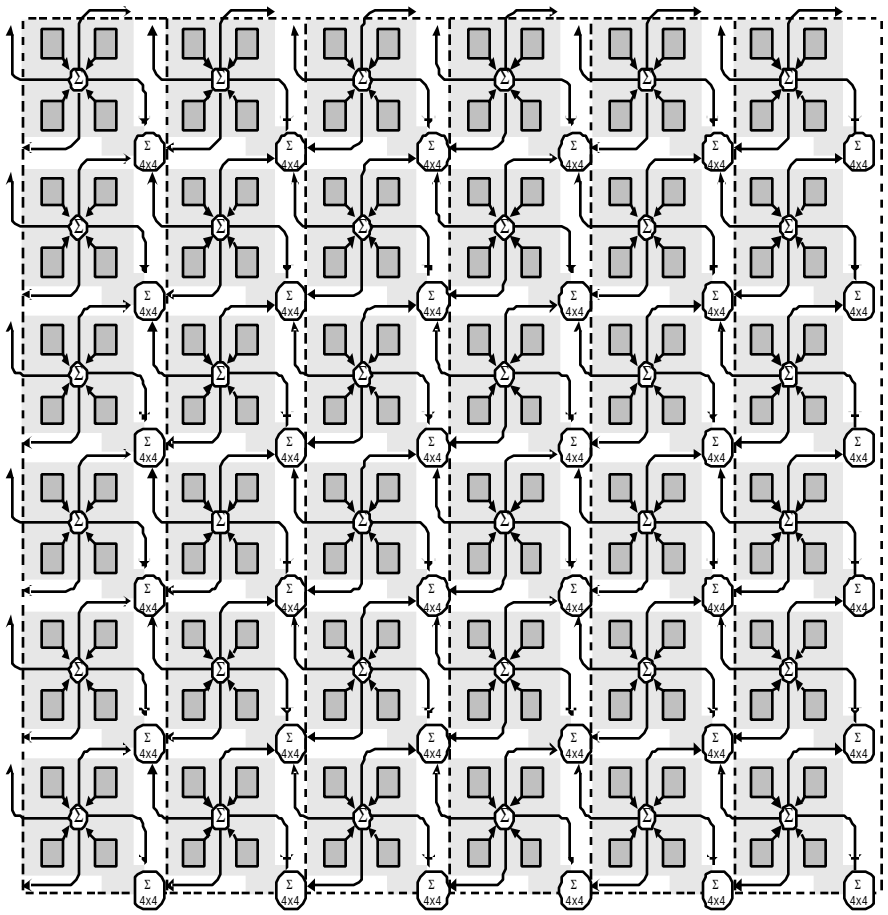

- PMT inputs summed as 2x2 groups
- 2x2 outputs summed as 4x4 groups.
- 4x4 sums are tiled for complete coverage

EMCAL Board Topology

- Back-Plane / Daughter board assembly
- 6 FEE cards / FEM
- 1 Serial & Timing card / FEM
- 1 Trigger Sum card / FEM
- 1 Heap Manager card / FEM
- 1 Data Formatting card / FEM

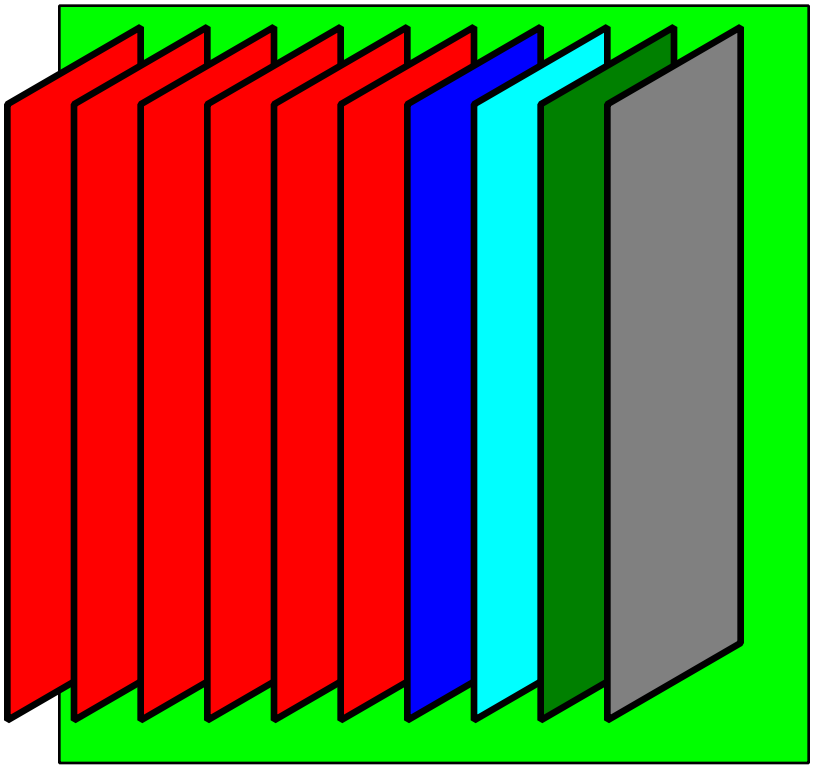

EMCAL FEE Back-plane

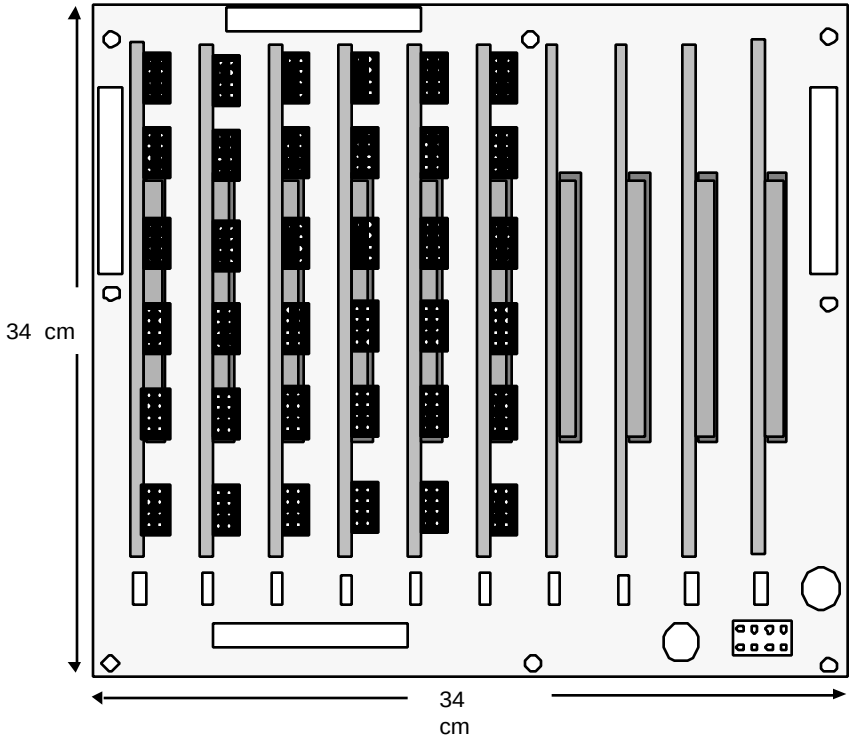

- Holds all daughter cards and power regulators.
- The Back-plane is space constrained due to PbGl vs. the concrete wall of hall

EMCAL FEE Daughter-board

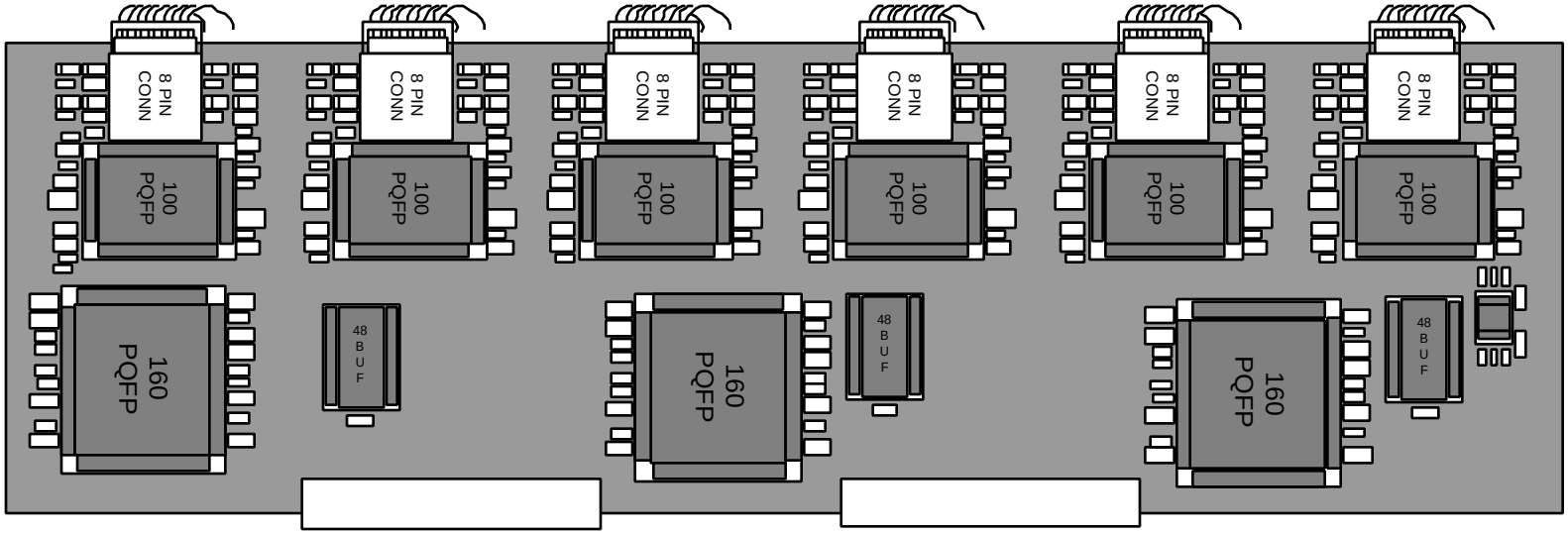

- Contains Preamp and AMU/ADC ASICS.
- Measures and digitizes inputs from 24 PMTs.

EMCAL Heap Manager Daughter - board

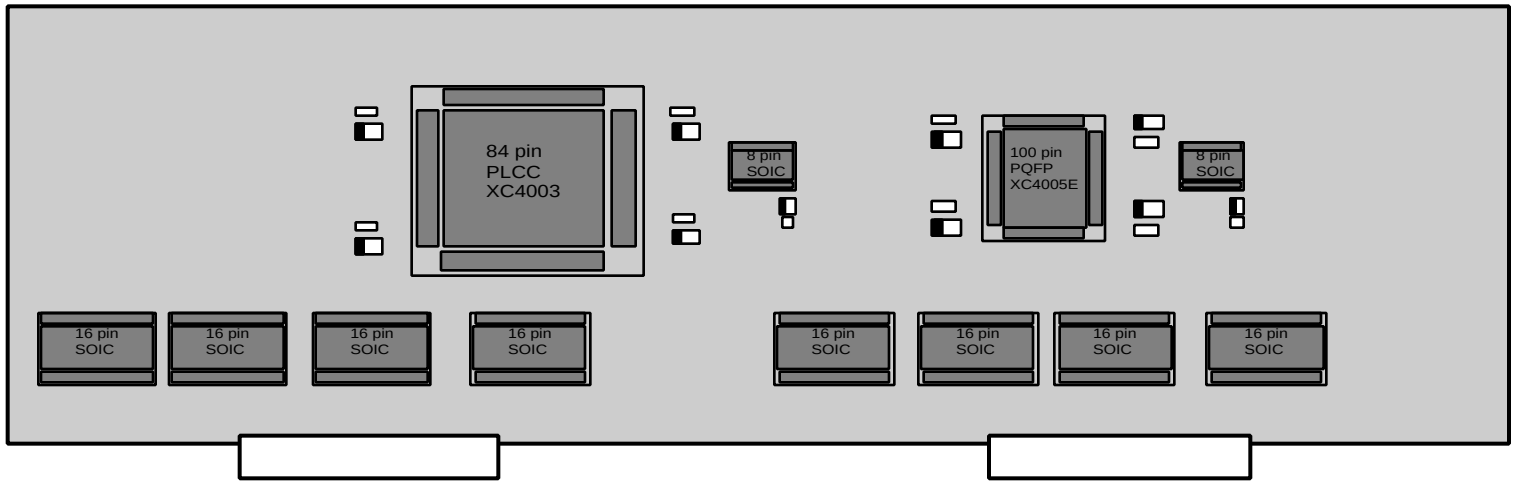

- Primary Logic control functions of FEM.
- Contains ALM, ADC readout control, and mode bit logic.

EMCAL Serial & Timing Daughter-board

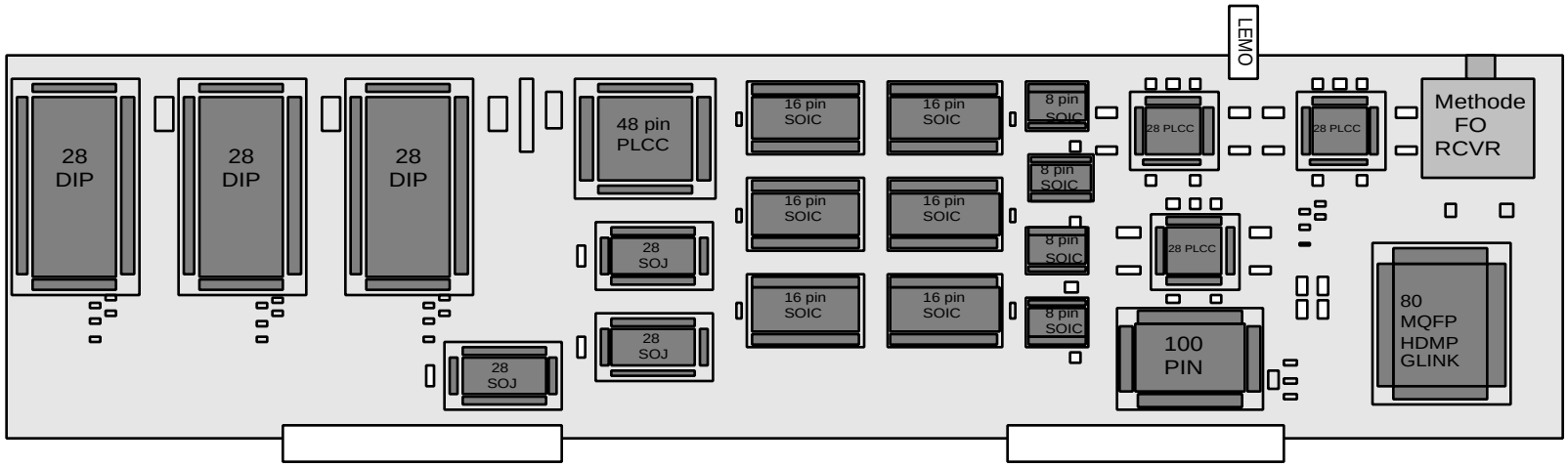

- Distributes clocks, LVL-1 accepts, mode bits.
- Distributes serial data via ARCNET processor.

EMCAL Data Formatter Daughter- board

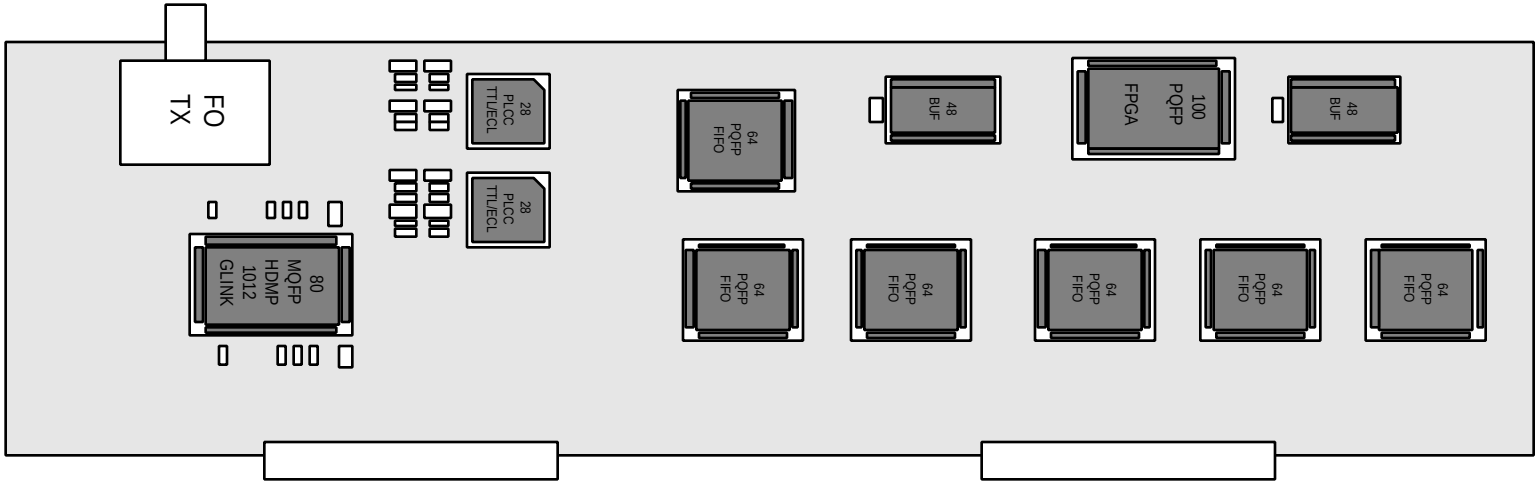

- Provides Gain Range Selection of Energy data.
- Provides Data formatting and transmission to DCM

EMCAL Trigger Sum Daughter-board

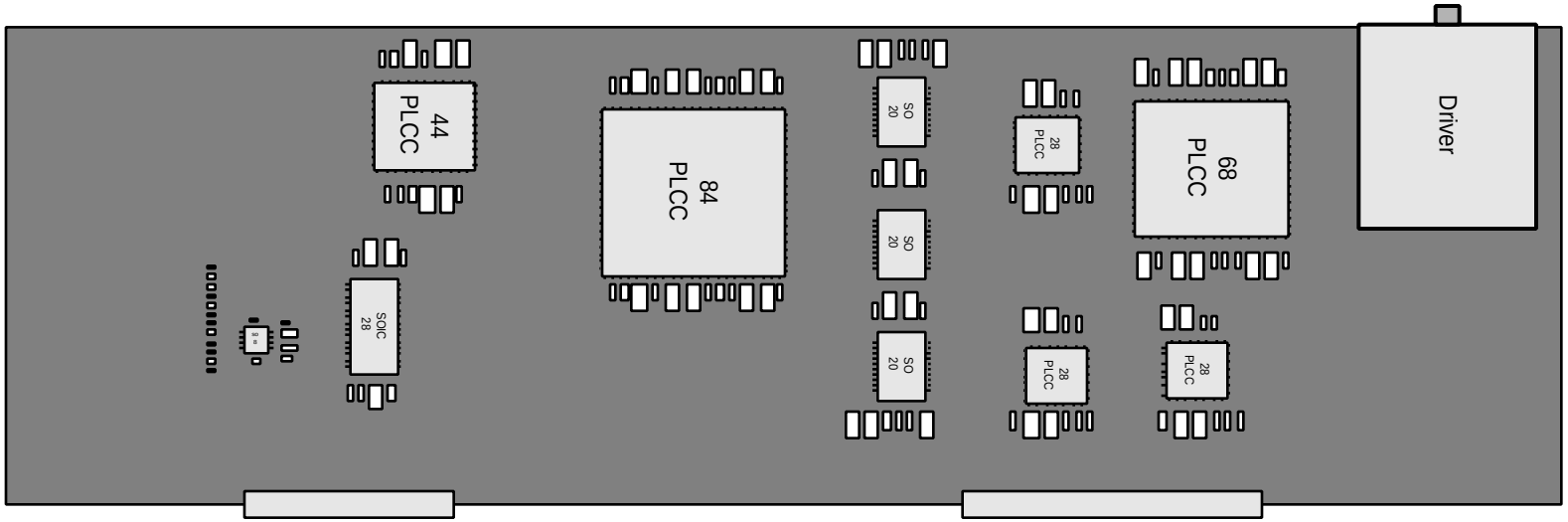

- Collects digital and analog trigger sum data.
- Formats and transmits data to LVL-1.

EMCAL FEM Power & Grounding

- Separate Digital and Analog Ground Planes and Power planes in daughter cards.
- Each daughter card has its own LDO regulator for isolation protection.
- FEM grounded through main DC power input.

EMCAL Data Format to DCM

1	FFFF	PACKET START	
2	- - - -	DETECTOR ID	
3	- - - -	EVENT NUMBER	
4	- - - -	FEM ADDRESS	
5	- - - -	FLAG WORD	
6	- - - -	AMU TIMING CELL ADDRESS	
7	- - - -	AMU PRE CELL ADDRESS	
8	- - - -	AMU POST CELL ADDRESS	
9	- - - -	CH 0	TIMING
10	- - - -	CH 0	PRE ENERGY
11	- - - -	CH 0	POST ENERGY
12	- - - -	CH 1	TIMING
13	- - - -	CH 1	PRE ENERGY
14	- - - -	CH 1	POST ENERGY
438	- - - -	CH 143	TIMING
439	- - - -	CH 143	PRE ENERGY
440	- - - -	CH 143	POST ENERGY
441	- - - -	USER WORD 1	
442	- - - -	USER WORD 2	
443	- - - -	USER WORD 3	
444	- - - -	USER WORD 4	
445	- - - -	USER WORD 5	
446	- - - -	USER WORD 6	
447	- - - -	USER WORD 7	
448	- - - -	USER WORD 8	
449	- - - -	LONGITUDINAL PARITY	
450	0000	TRAILER END WORD	

EMCAL Deliverables

PbSc FEE cards		720	
PbGl FEE cards		480	
Heap Manager card		200	
Serial & Timing card		200	
Data Formatting card			200
Trigger Sum card		200	
Back-Plane cards		200	
– total boards	2,200		Includes 20% Overage
PbSc preamp ASIC		4,320	
PbGL preamp ASIC		2,880	
AMU / ADC ASIC		3,600	
– total chips	10,800		Includes 20% Overage

Goal is 10% qualified spares

EMCAL Numerology

- Total channels 25,000
- Channels / FEM
  144
- total FEM on system 172
- LVL-1 fiber / FEM 1
- DCM fiber / FEM 1
- Timing fiber / FEM 1
- Total fibers to system
  516

EMCAL Responsibilities

- **Project Management:**
  - Alan Wintenberg (Primary)
  - Jim Walker (Assistant)
- **ASICs Design- Alan Wintenberg**
  - Preamp - Alan Wintenberg, Shane Frank, Mike Simpson, Gentry Jackson, Chris Moscone
  - AMU/ADC - Chuck Britton, Mike Emery, Melissa Smith, Alan Wintenberg, Mark Allen
- **Board Design - Jim Walker**
  - Backplane - Jim Walker, Mike Emery
  - FEE - Jim Walker, Alan Wintenberg, Mike Simpson, Shane Frank
  - Heap Manager - Mark Musrock
  - Serial & Timing - David Smith, Mike Emery
  - Trigger Sum - Shane Frank, Alan Wintenberg
  - Data Formatting - Jim Walker, ORNL coop students
  - All board layout - Mike Cutshaw, Don Hurst
- **Production Assembly and Test - Jim Walker**
  - Test station construction - Jim Walker, J.P. Jones, Alan Wintenberg
  - Test station software - J.P. Jones, Jim Walker, Alan Wintenberg
  - Component orders/inventory control - J.P. Jones, Jim Walker

EMCAL Simplified PERT Chart

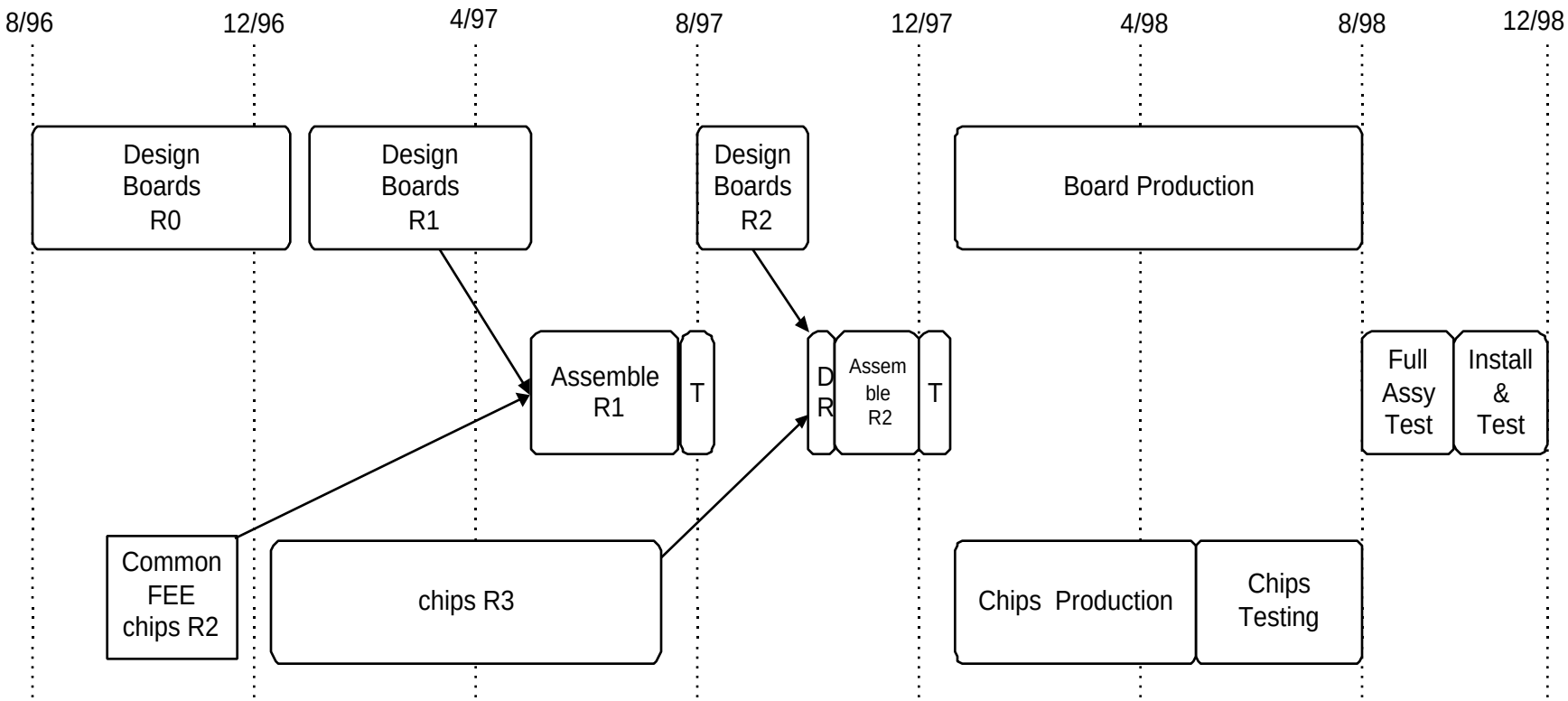

T = On Detector Test
DR = Design Review

EMCAL ORNL Budget

- Design Costs (WBS 5.3.9.1) $ 380k
- Prototypes (WBS 5.3.9.2) $ 390k
- Fabrication (WBS 5.3.9.3) $1,600k
- System Installation (WBS 5.3.9.4) $ 20k
- System Testing Costs (WBS 5.3.9.5) $ 20k

- **Total Budgeted Cost (WBS 5.3.9) $ 2, 410k**
  - Time Frame (10/96 to 12/98)

EMCAL Manufacturing Plan

- Contract out assembly of components on individual boards
- Purchase, sort, and inventory parts at ORNL. Deliver to assembler.
- Test and deliver custom ASICs to assembler.
- Test individual assembled boards at ORNL.
- Assemble FEMs and test at ORNL.
- Ship assembled FEMs to BNL.

EMCAL Test Acceptance Criteria

- A standards group will need to determine the tolerance of agreed upon specifications.
- The violation of tolerances will need to be ranked in order of impact/severity.

EMCAL Test Fixtures

- Preamp ASIC station
- AMU / ADC ASIC station
- Back-plane / Daughter boards station
- Remote serial control
- Remote timing and mode-bit control
- Remote data collection
- Remote LVL-1 collection

EMCAL Test Equipment Needed

Equipment	Need	Have
PCs	7	1
Oscilloscopes	6	2
Pulsers	3	1
Digital I/O cards	8	2
GPIB control cards	4	1
Multimeters	2	1
Logic Analyzers	1	

EMCAL Test Results

- Test results will be stored on PC hard drives.
- Data will be backed up on 3.5” floppy disks as well as tape back-up.
- Data will be stored in ASCII text format.

EMCAL Software

- All test software will be LABVIEW 4.O running on PCs with Win95.

EMCAL Rework of Production Boards

- Rework will be based on the costs of repair vs. the cost and availability of replacement parts / boards. (Commercial vs custom ASIC)
- Manufacture 20% extra boards to meet system requirements with 10% working spares.