“CCD 101” Block diagram for basic CCD readout chain. (CDS = correlated double sampling; see dual-slope integrator on Page 4)

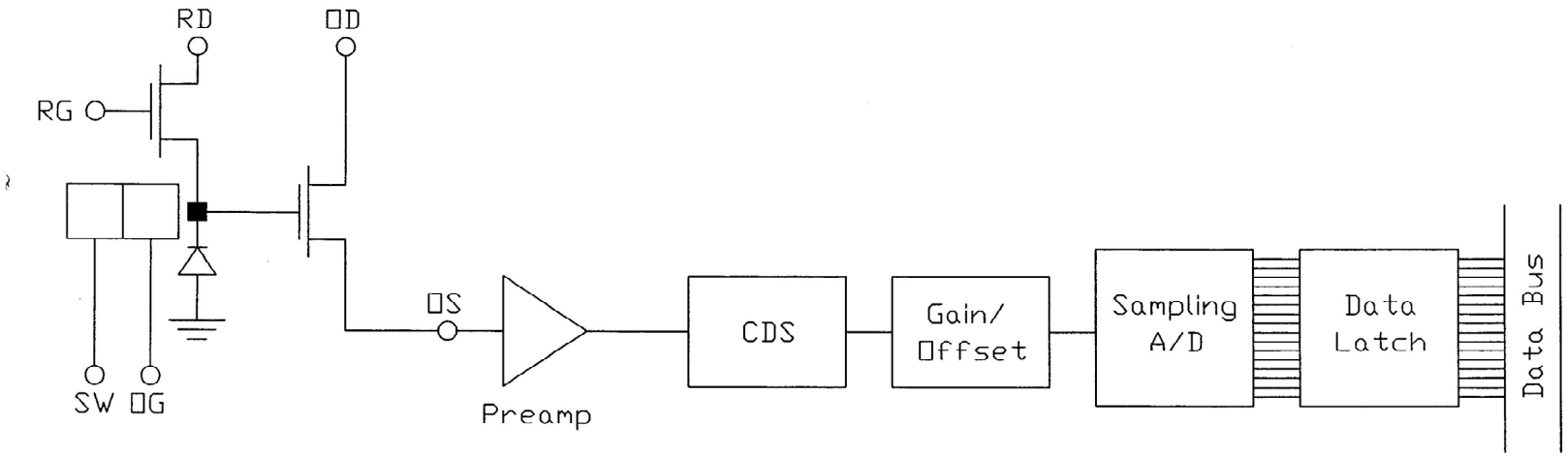

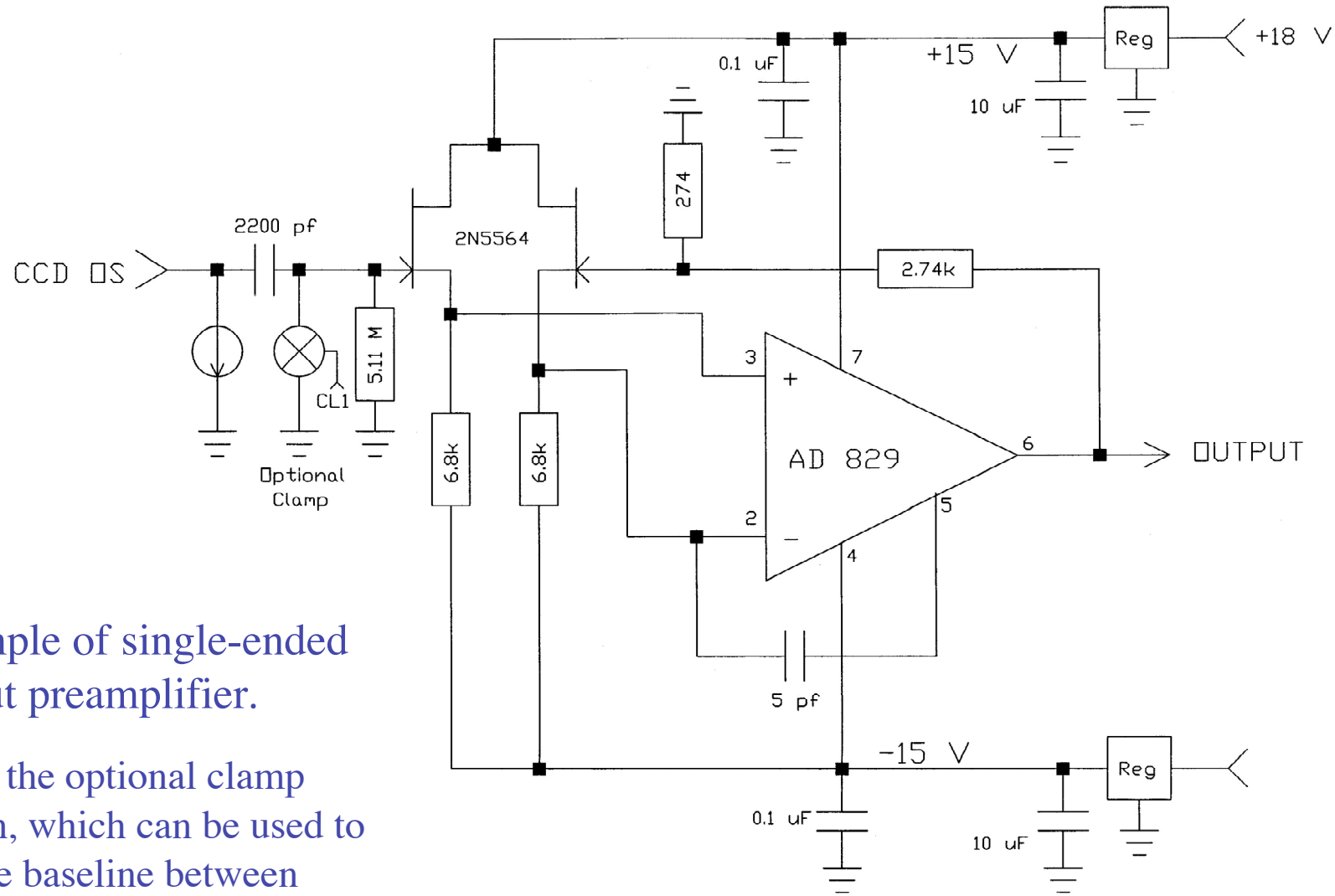

Example of single-ended output preamplifier.

(Note the optional clamp switch, which can be used to restore baseline between lines or even between pixels.)

Example differential output preamplifier.

(Same optional clamp restore; see Page2)

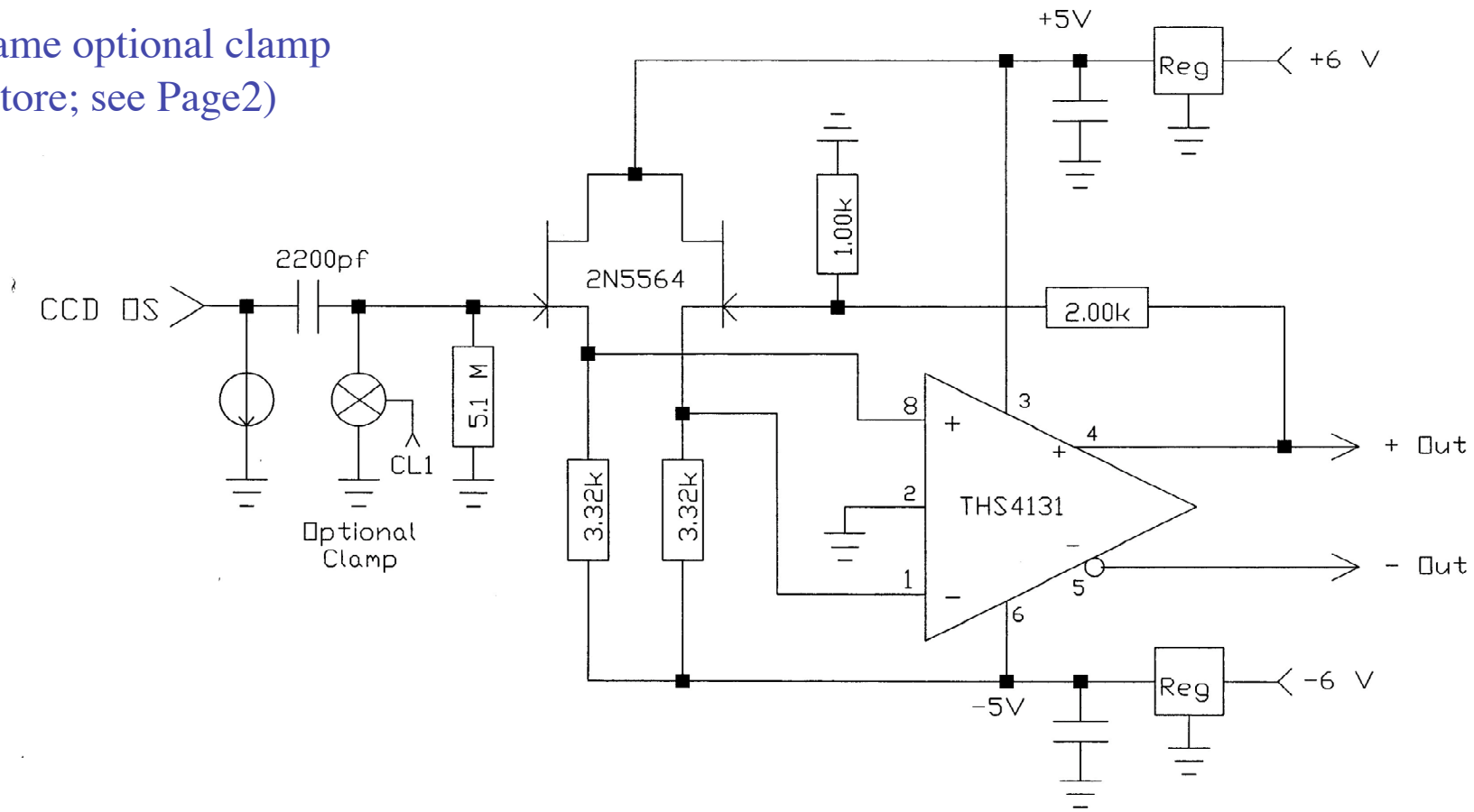

General block diagram for dual-slope integrator to achieve correlated double sampling. Each of the two integration cycles is on the order of ~1 microsecond.

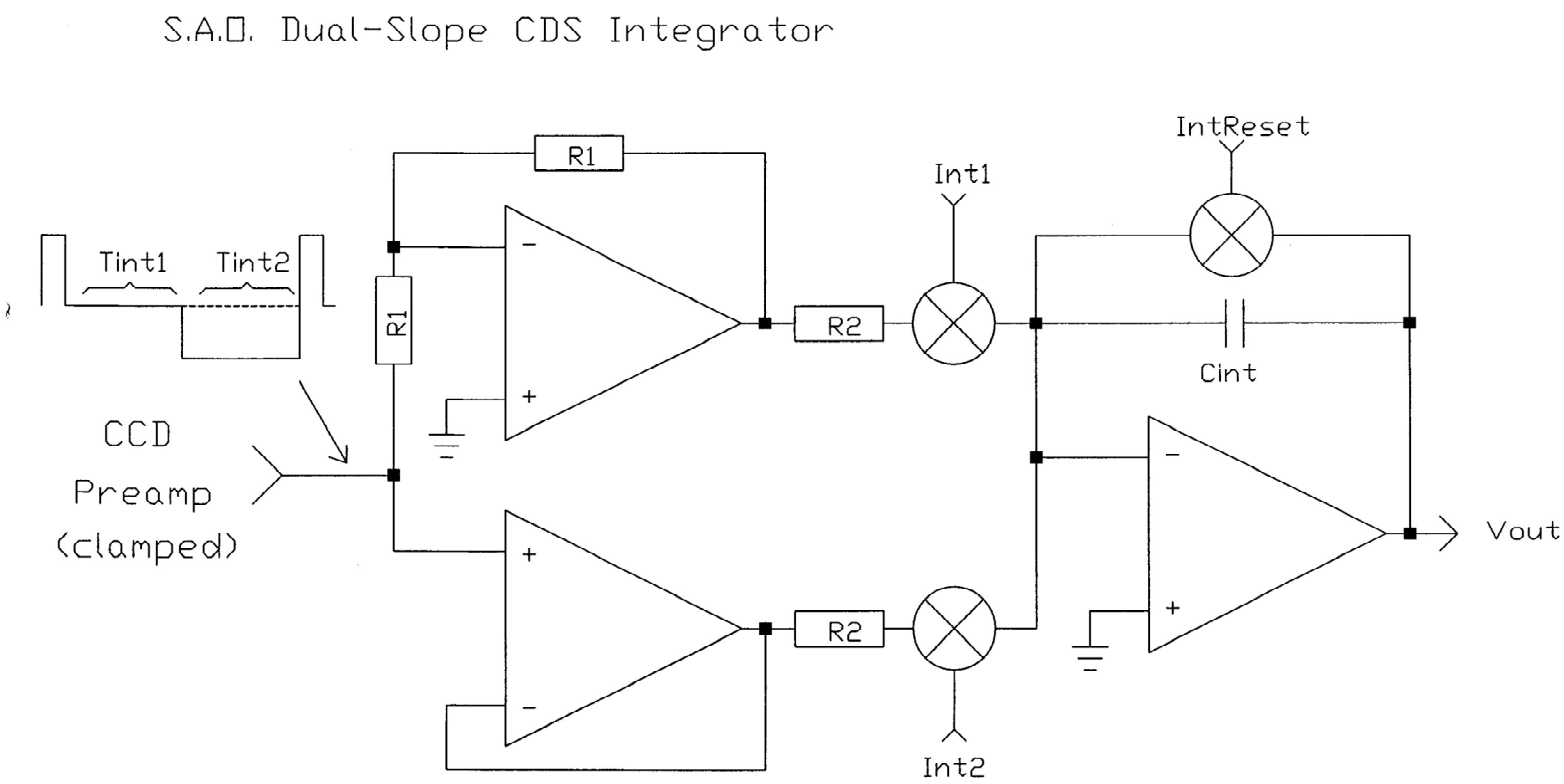

Vout = (1/R2 * Cint) { integral (Sig * Tint1) - integral (Sig * Tint2) }

Discrete implementation of a programmable offset voltage generator ("poor man's DAC"). The big part is an AD5235, a 1024-position digitally programmable potentiometer.

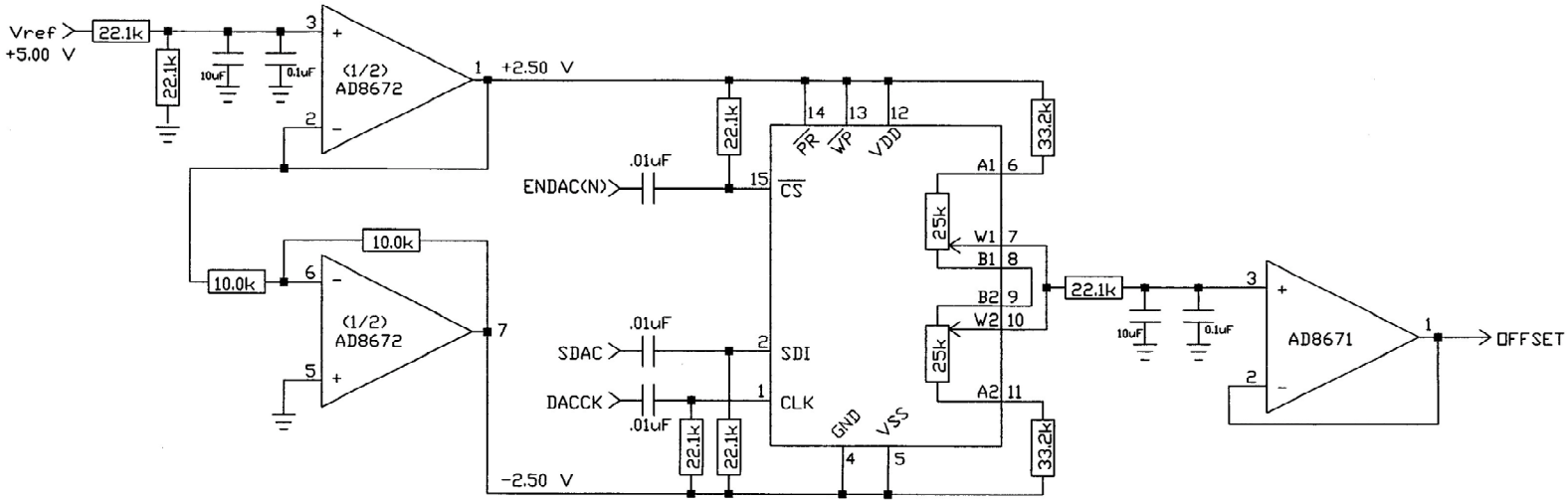

Complete readout chain, using discrete parts/packages, as implemented in an actual telescope CCD. (The AD7679 is an 18-bit ADC).

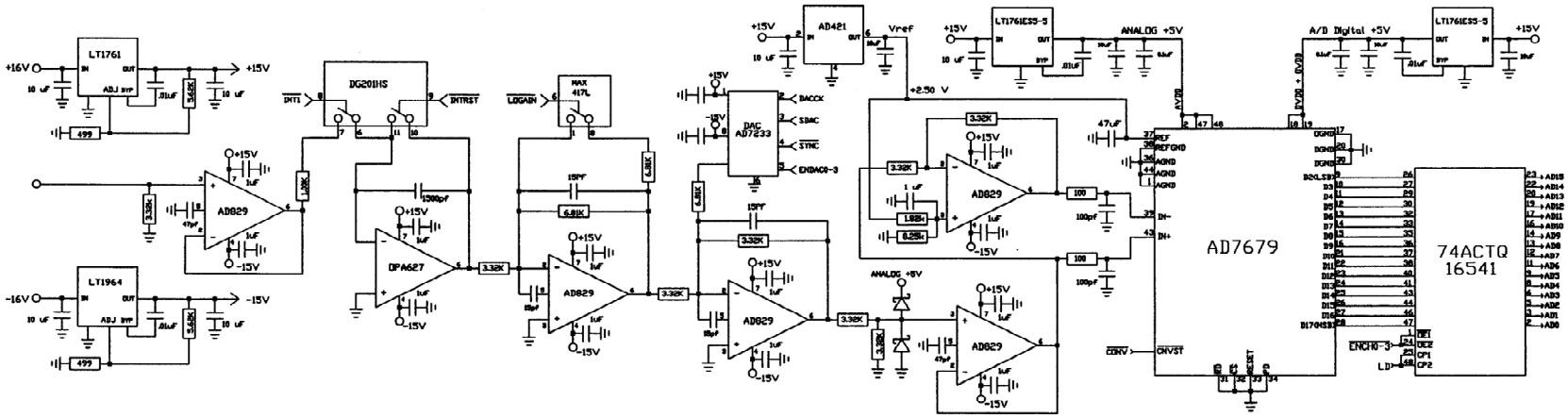

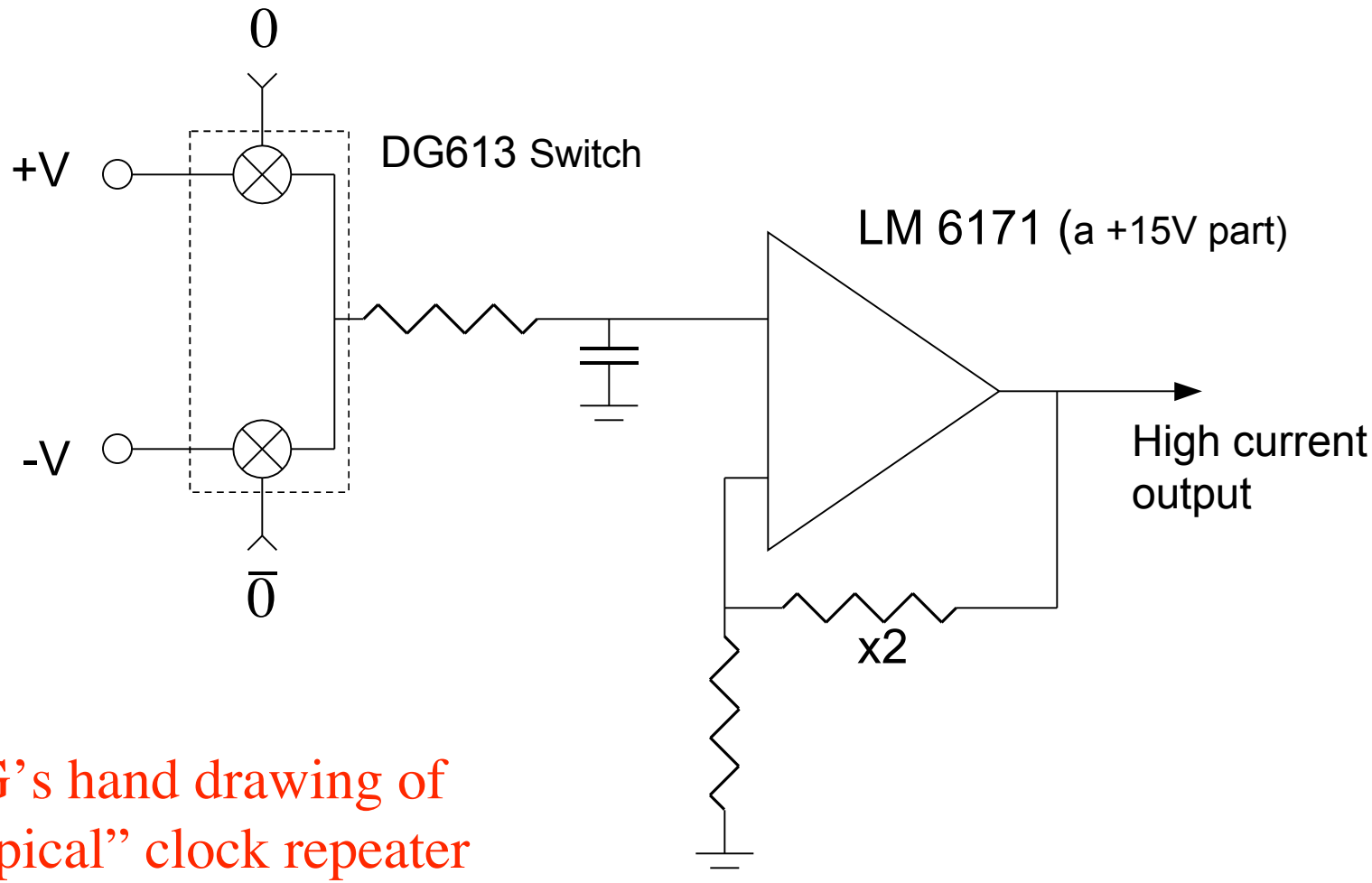

JG's hand drawing of "typical" clock repeater