Management Plan
for the
Silicon Vertex Tracking Detector (VTX)
for PHENIX

at

Brookhaven National Laboratory

For the U.S. Department of Energy
Office of Science
Office of Nuclear Physics

June 2007

PHENIX VTX detector Management Plan

PHENIX Collaboration approval:

Yasuyuki Akiba — date June 1, 2007
Project Manager

Barbara Jacak — date June 4, 2007
PHENIX Spokesperson

Edward O'Brien — date June 1, 2007
PHENIX Operation Manager

Axel Drees — date June 13 2007
PHENIX Upgrade Manager

Brookhaven National Lab approval:

Thomas Ludlam — date 6/11/07
BNL Project Oversight Manager

Peter Bond — date 6/12/07
BNL Assoc. Laboratory Director, Nuclear and Particle Physics

DOE approval:

Jehanne Simon-Gillo — date 6-20-07
Director, Facilities and Project Management Division
Office of Science for Nuclear Physics

Concurrence of RIKEN

Hideto E'nyo — date Jun 5, 07
Nishina Accelerator Center, RIKEN, Japan

Concurrence of LLR, Ecole Polytechnique

Michel Gonin — date Jun 12 07
LLR, Ecole Polytechnique, France

1 INTRODUCTION 1
2 FUNCTIONAL REQUIREMENTS 2
3 TECHNICAL SCOPE 4
3.1 STRIP DETECTORS 4
3.2 PIXEL DETECTOR 7
3.3 MECHANICS and INFRASTUCTURE 9
3.4 SUMMARY of DELIVERABLES and PROJECT Complete Requirement 11
4 MANAGEMENT ORGANIZATION 14
4.1 GENERAL 14
4.2 PROJECT MANAGEMENT RESPONSIBILITIES 14
5.1 Schedule 20
5.2 BUDGET 25
6 RISK 28
7 CHANGE CONTROL 30
8 ASSESSMENTS 32
9 PROJECT CONTROLS AND REPORTING SYSTEMS 32
10 INSTITUTIONAL PARTICIPATION 33

List of Figures

Figure 1 Schematic diagram of strip electronic system. 5
Figure 2 Schematic diagram of pixel electronic system 8
Figure 3 Management chart for the PHENIX VTX fabrication project. The part of the scope of RIKEN and French group are shown in yellow and pink, respectively. Supporting efforts for the project by scientists are shown in light green. 19
Figure 4 Milestones of the PHENIX VTX project. The year column shows the US Fiscal Year. 21
Figure 5 Critical path for the PHENIX VTX project. The year column shows the US Fiscal year. 22

List of Tables

Table 1 PHENIX VTX System Functional Requirements. The performance deliverables discussed in Table 4 in Section 3.4 are marked by (*). 3
Table 2 Summary of main parameters of the outer two strip layers 4
Table 3 Summary of main parameters of the inner two VTX layers. 7
Table 4 Performance Deliverables of VTX 11
Table 5 Component Deliverables of VTX (DOE) 12
Table 6 In kind contribution to the VTX from RIKEN (R) and French (F) group... 13
Table 7! Control Milestones of the project for FY07. Items in blue are the responsibility of the RIKEN/French groups. 23
Table 8 Control Milestones of the project for FY08. Items in blue are the responsibility of the RIKEN/French groups. The milestones on the critical path are colored in red. 23
Table 9 Control Milestones of the project for FY09. Items in blue are the responsibility of the RIKEN/French groups. 24
Table 10 Control Milestones of the project for FY10. The milestones on the critical path are colored in red. 24
Table 11! The cost summary for the PHENIX VTX project. Amounts are in FY07 kilo-dollars. 26
Table 12 The DOE budget allocation profile (budget authority profile) of the VTX Project and the planned expenditures profile. The budget authority profile proceeds the expenditure profile. An inflation rate for 2 % for material and 4% for workforce is assumed in the AY dollars. 27
Table 13 Change approval levels. 31
Table 14 VTX Project Institutional Participation 33

1 INTRODUCTION

Brookhaven National Laboratory (BNL) proposes to install a four-layer silicon tracking detector (VTX) in the inner region of PHENIX. The detector will cover range of ~ 2π azimuth and $-1.2 < \eta < 1.2$ in pseudo-rapidity. The inner two layers will use silicon pixel sensors with 50×425 μm pixels bump-bonded to ALICE1LHCb readout chips that have been developed for the ALICE experiment at the European Organization for Nuclear Research (CERN) Large Hadron Collider (LHC). The outer two layers will use silicon strip sensors (known as a strip-pixel sensor) developed by the Instrumentation Division at BNL. With stereoscopic strips of 80 μm × 3 cm, these devices achieve an effective pixel size of 80 × 1000 μm. The project will use the SVX4 readout chip developed at Fermi National Accelerator Laboratory (FNAL) to readout the strip detectors.

The VTX will substantially enhance the physics capabilities of the PHENIX central arm spectrometers. The prime motivation is to provide precise measurements of heavy-quark production (charm and beauty) in $A+A$, $p(d)+A$, and polarized $p+p$ collisions. The detector also provides a large solid angle coverage of charge particles with modest momentum resolution to measure jets and high p_T di-hadron and photon-hadron correlations. These are key measurements for the future physics program of Relativistic Heavy Ion Collider (RHIC), both for the heavy ion program as it moves from the discovery phase towards detailed investigation of the properties of the dense nuclear medium created in heavy ion collisions, and for the exploration of the nucleon spin-structure functions. Further details of the physics reach of the VTX system are described in the proposal.

The new detector will be realized in two parallel fabrication projects, one funded by RIKEN and France and one funded by the U.S. Department of Energy (DOE). US institutions are responsible for the strip detectors, the mechanical system and the infrastructure, while Japanese and French institutions have responsibility for the pixel detectors.

2 FUNCTIONAL REQUIREMENTS

The principal functional requirement of the VTX to meet its physics goals is to provide precise measurements of tracks back to the collision vertex with a transverse distance of closest-approach (DCA) resolution (r.m.s) of 100 μm or better.

Other general requirements:

- The system must fit into the integration envelope agreed to within PHENIX
- The system must be able to operate inside the PHENIX magnet.
- The system must be safe. The system must meet BNL Collider Accelerator Department (C-AD) safety requirements.
- The system must not significantly reduce the physics capability of other PHENIX detector subsystems.
- The noise hit rate of the pixel detector is less than 0.1% per event for threshold of 0.3MIP after noisy channels are masked.
- The noise level of the strip detector, defined as 1 σ width of the pedestal, is less than 15% of the MIP signal in average after the MIP charge is shared by a X-strip and an U-strip.
- The inner two layer of the system must have a radiation length of less than 2.5 %
- The outer two layer of the system must have a radiation length of less than 3.5 %
- The system must survive in the radiation environment of RHIC-II for 10 year. The radiation level at present RHIC luminosity is estimated to be 0.5 krad/year (Au+Au) to 1 krad/year (pp) for the inner-most strip detector (R=10cm) and 5 krad/year (Au+Au) to 10 k rad/year (p+p) for the inner-most pixel detector (R=2.5cm). These numbers will be increased by a factor of 10 when RHIC-II luminosity upgrade is realized.
- The cooling system of the VTX should be able to remove the heat generated in the ladders. The total heat load of the system is estimated to be 3100 W.
- The operation temperature of the strip sensor is 0° C ² 3 $^{\circ}$ C. This temperature requirement is to keep the leakage current of the strip sensor less than 15 nA per strip after radiation damage of ~100k rad expected for 10 years of RHIC-II operation.
- The VTX detector is in a controlled nitrogen gas environment to prevent condensation of water on the detector.
- The VTX system must work within the existing PHENIX readout scheme,
    - must work at RHIC clock (9.4MHz)
    - must store the data on the detector for the LVL1 latency (4 μs),
    - must have a 4-deep buffer of LVL1 accepted events
    - must readout data within 100 μs to its front-end modules (FEMs) off the detector so as to not significantly reduce the maximum rate of PHENIX Level-1 triggers which is designed to be10 kHz.

These requirements are summarized in the Table 1. The performance deliverables of the VTX detector that is demonstrated at the project completion and how they are evaluated are discussed in Section 3.4.

Table 1 PHENIX VTX System Functional Requirements. The performance deliverables discussed in Table 4 in Section 3.4 are marked by (*).

Number of detector layers	2 inner layers of pixel detectors 2 outer layers of strip layers
Acceptance	$\|\eta\|<1.2$ and 2×(} ϕ |<70》*
Detector dead area (*)	Less than 10% per layer in the region covered by the acceptance of PHENIX central arms
DCA resolution (*)	σ_{DCA} <100 μm for p_T>2 GeV/c
Pixel size of the pixel detector	50 μm (ϕ)×425 μm (z)
Resolution (σ_ϕ) of the pixel detector	< 20 μm
Resolution (σ_z) of the pixel detector	< 180 μm
Hit threshold of the pixel detector	Less than 0.3 MIP
Noise hit rate in the pixel detector (*)	< 0.1 % per event w/ threshold < 0.3 MIP
Strip size of the strip detector	80 μm (ϕ)×3 cm (z) (single view)
Effective Pixel size of strip detector	80 μm (ϕ)×1 mm(z) (w/ X view + U view)
Resolution (σ_ϕ) of the strip detector	< 30 μm
Resolution (σ_z) of the strip detector	< 1.25 cm (single view)
Effective resolution (σ_z) of the strip	< 400 μm (w/ X view + U view combined)
Noise level in the strip detector (*)	Pedestal width (1σ) < 15% of MIP (sensor + SVX4)
Radiation length per layer (pixel)	< 2.5 %
Radiation length per layer (strip)	< 3.5 %
Radiation tolerance	The system works for 10 years at RHIC
Operating temperature of strip sensor(*)	0° C ² 3° C
Cooling system capacity	3100W
Read-out clock (Bunch crossing rate)	9.4M Hz
LVL1 latency	4 μs
LVL1 Multi-Event buffer depth	4 events
Read-out time	<100 μs
Stand alone read-out rate (*)	≥10 kHz

3 TECHNICAL SCOPE

The overall PHENIX VTX project is divided into three major subsystem groups: (a) strip detector, (b) pixel detector, and (c) mechanical and infrastructure. The DOE is responsible for (a) and (c), although non-US groups make contributions of scope within these systems

3.1 STRIP DETECTORS

The strip detector forms the outer two layers (labeled R3 and R4) of the VTX. The strip detector system consists of the strip detector ladders and the strip read-out electronics system. The main detector parameters of the strip detector are summarized in Table 2. Each strip ladder comprises of strip-pixel sensors, read-out-cards, and a mechanical stave with cooling. The rest of the strip system includes power, signal and control cables between the ladders and the off-detector front-end-modules (FEMs), and PHENIX-standard data-collection modules (DCMs). The schematic diagram of the strip detector electronics system is shown in Figure 1.

The design, production, and delivery of the strip detector ladders and the strip read-out electronics system are the responsibility of US institutions within PHENIX. Two components used for the strip detector system, the strip sensors and the SVX4 read-out chips, have been procured by the Japanese and are supplied to the strip system. Quality assurance procedures and tests will be established at ORNL and BNL to insure that all strip ladders are ready for successful operation in PHENIX.

Table 2 Summary of main parameters of the outer two strip layers

VTX	Layer	R3	R4
Geometrical dimensions	R (cm)	10	14
	Δz (cm)	31.8	38.2
	Area (cm^2)	1960	3400
Channel count	Sensor size R × z (cm^2)	3.43 × 6.36 (384 × 2 strips)	
	Channel size	80 μm × 3 cm (effective 80 × 1000 μm^2)	
	Sensors/ladder	5	6
	Ladders	18	26
	Sensors	90	156
	Readout chips	1080	1872
	Readout channels	138,240	239,616

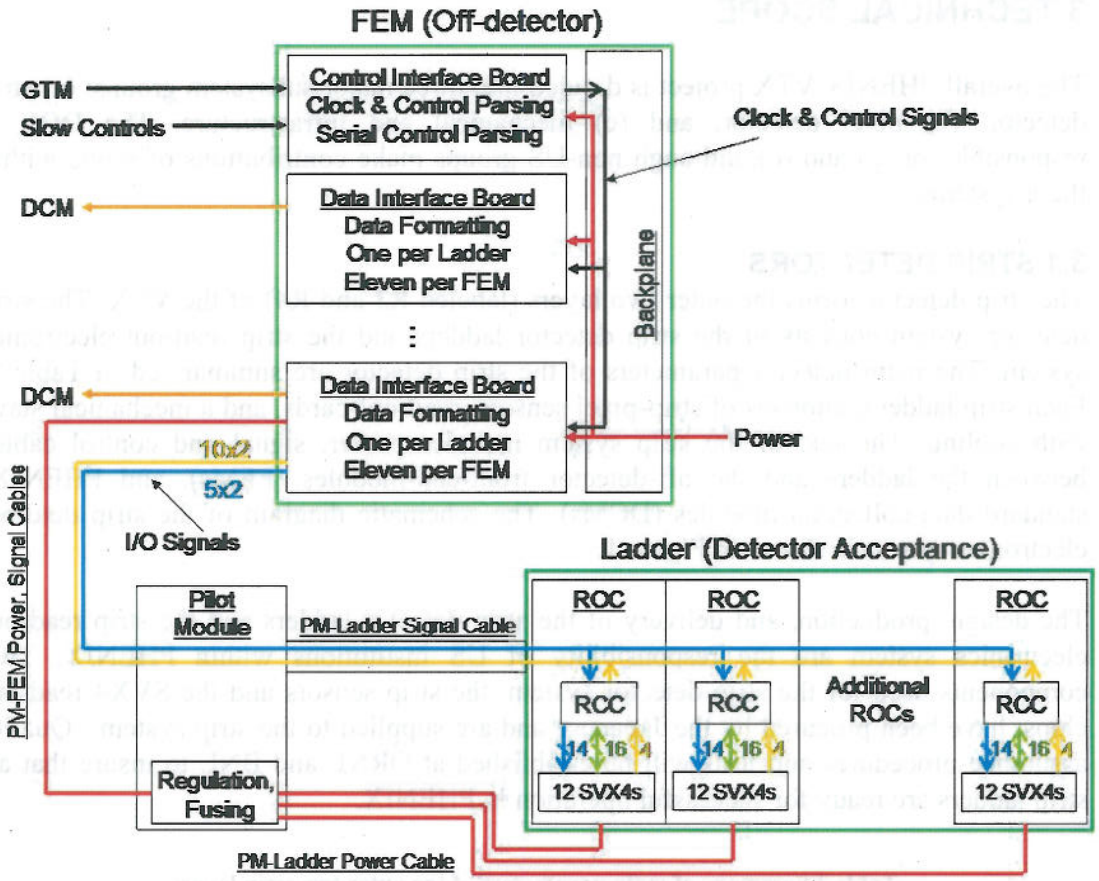

Figure 1 Schematic diagram of strip electronic system.

3.1.1 Definitions

- The strip-pixel sensor is a single-sided two-dimensional strip sensor developed at BNL instrumentation division. One ~3.4 Ø 6.4 cm strip sensor is divided into two ~3.4 Ø 3.2 cm sensor areas. Each sensor area has 384 strips in two dimensions (X and U). Thus one sensor has total of 1536 strips.
- The SVX4 is an ASIC developed by FNAL and LBL for the readout of silicon detectors. There are 128 channels on each SVX4 chip. Each strip sensor is wire-bonded to and read-out by twelve SVX4s.
- A Read-Out card (ROC) is a board to read-out one sensor. A ROC has twelve SVX4s that are readout by a custom, digital ASIC: the readout-chip-controller (RCC) placed at the center of the ROC.
- A Sensor Module is a sensor glued and wire bonded to a ROC.
- A ladder comprises five (for R3) to six (for R4) sensor modules, bus, mechanical stave, and cooling. A ladder covers the full acceptance in beam direction (z).
- A Pilot Module (PM), mounted near the magnet pole-tip, provides local power regulation, filtering and fusing for each ROC. The PM also routes signals (data, timing and slow controls) between the ladder and the Front-End Module.

- A Front-End Module (FEM) serves as the interface between the ladders and the PHENIX DAQ (Serial Control, Clock & Control, and the Data Collection Module) and will be located outside of the detector acceptance.
- Data Collection Modules (DCM) are the front-end of the PHENIX DAQ system. They collect data from subsystems, format the data, and send the data to the Event Builder.

3.1.2. Responsibilities

- The design, production, and delivery of the strip detector ladders and the strip read-out electronics system are funded by the US DOE. Two components used for the strip detector system, the strip sensors and the SVX4 read-out chips are responsibility of RIKEN and are supplied by RIKEN.
- RIKEN is responsible for supplying the silicon strip sensors for the strip system. The strip system needs 246 sensors in the VTX detector and additional 66 sensors for spare sensor modules. RIKEN purchased 400 silicon strip sensors from Hammamatsu. The purchase contract requires the company to deliver sensors that meet project specifications, including passing Q/A tests. The Q/A test procedure and the sensor acceptance criteria were established by BNL and Stony Brook University (SBU) group. The BNL and SBU will perform the final sensor Q/A for a sample of the delivered sensors.
- RIKEN is responsible for supplying the SVX4 read-out chips for the strip system. RIKEN has purchased SVX4 chips from FNAL. These chips have been tested by FNAL before delivery, and the test result show that there are more than 5000 good SVX4 chips. The strip system needs 2952 SVX4 chips in the VTX detector and additional 1008 SVX4 chips for the spare ROCs.
- The ROC's will be designed by ORNL. A design R&D of the ROC was performed by ORNL using the funds from RIKEN and the R&D funds of DOE. The manufacture of the cards will be overseen by ORNL, and all testing and Q/A will be performed at ORNL by ORNL and Iowa State University (ISU) personnel.
- The assembly of the strip sensors and the ROCs to sensor modules will be overseen by BNL personnel.
- The pilot modules will be jointly designed by ORNL and ISU. The assembly will be overseen by ORNL and Q/A performed at ORNL by ORNL and ISU personnel.
- The FEM's will be developed and tested at ORNL. The assembly will be overseen by ORNL and the Q/A performed by ORNL personnel.
- The strip subsystem will use the 2nd generation DCM, which is now being developed at Nevis Laboratory, Columbia University. The development of the 2nd generation DCM is funded by the detector R&D fund of PHENIX, and it is outside of the scope of the VTX project. The DCMs used for the strip system read-out are fabricated by the US DOE fund of the VTX project, with Nevis personnel having responsibility for the delivery.
- Mounting and aligning the sensor modules on ladders, with signal and power connections ready for integration the VTX will be performed at BNL with BNL and SBU personnel working together, with overall responsibility by BNL staff.
- Tests of strip detector ladders will take place at BNL with BNL, SBU, ISU, ORNL and UNM personnel, with overall responsibility by BNL staff.

3.2 PIXEL DETECTOR

The production and delivery of this detector is the responsibility of Japanese and French institutions within PHENIX. The pixel detector forms the inner two layers R1 and R2 of the VTX. It is constructed from individual pixel ladders. The number of ladders, channels per ladder is summarized in Table 3. Each pixel ladder comprises of pixel sensors bump-bonded to read-out chips, two signal and power buses (one for each side), and a mechanical stave with cooling. The rest of the pixel system includes SPIRO modules to interface between the ladders and the off-detector front-end-modules (FEMs). Q/A procedures will be established by the Japanese institutions in collaboration with the US VTX project to insure that all pixel-ladders meet the design goals of the project.

Table 3 Summary of main parameters of the inner two VTX layers.

VTX	Layer	R1	R2
Geometrical dimensions	R (cm)	2.5	5
	Δz (cm)	21.8	21.8
	Area (cm^2)	280	560
! Channel count	Sensor size R × z (cm^2)	1.28 × 1.36 (256 × 32 pixels)	
	Channel size	50 × 425 μm^2	
	ROCs/sensor module	4	
	Modules/ladder	4	
	Ladders	10	20
	Sensor modules	40	80
	Readout chips	160	320
	Readout channels	1,310,720	2,621,440

3.2.1 Definitions

- A silicon pixel sensor contains 4 matrixes of 32 by 256 pixels. Each pixel has size of 50μm Ø 425μm.
- The ALICE1LHCb readout chip (ROC) was developed at CERN for ALICE experiment of LHC. One ROC is bump-bonded to one pixel matrix of the pixel sensor (i.e. 4 chips per sensor chip).
- A sensor module consists of a sensor chip bump-bonded with 4 read-out chips. This is the basic building block of the pixel system.
- A pixel bus is a thin, high density signal and power bus to read out the sensor module. It also supplies low voltage power to the read-out chips and bias voltage to the sensors.
- A bus extender is an extension of the pixel bus to a SPIRO module.
- A half ladder consists of two sensor modules, a pixel bus, and a bus extender. It is connected and is read-out by a SPIRO module. A half ladder+ SPIRO is a basic read-out unit of the system.
- A stave is a mechanical component that includes a support board (Carbon-Carbon thermal plate), the cooling tubes, and coupling system to the barrel mount.

- A pixel ladder consists of two half ladders mounted on a mechanical stave and is the basic mechanical building block of the pixel system. Pixel ladders are mounted on the barrel mounts.
- A Silicon Pixel Interface Read-Out (SPIRO) module supports the read out and control of the pixel ROCs in a half-ladder. It reads the data from the pixel ROCs, and sends the data to a FEM with high speed optical data link.
- A pixel Front End Module (FEM) serves as the interface between SPIRO modules and a DCM. A FEM supports and controls 2 SPIRO modules, formats the data from SPIRO, and sends the data to a DCM.

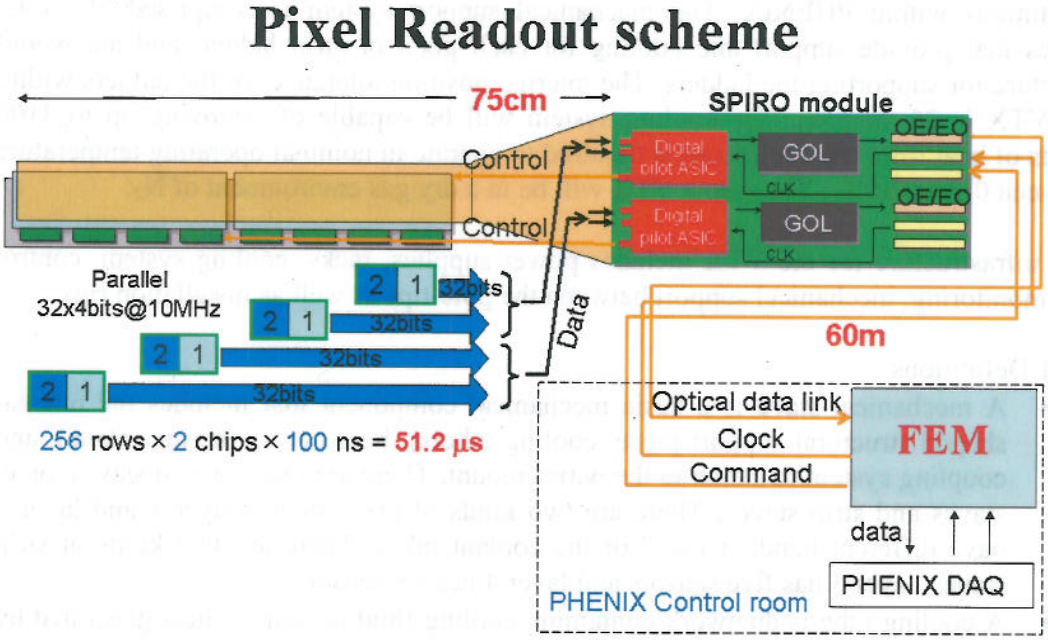

Figure 2 Schematic diagram of pixel electronic system

3.2.2 Responsibilities

- The pixel sensors have been purchased through CERN by RIKEN. All pixel sensors needed for the two pixel layers have been delivered to RIKEN.
- The pixel ROCs have been purchased by and delivered to RIKEN. RIKEN is responsible for the probing and Q/A of the ROCs. After the Q/A, the ROCs will be sent to a vendor in Finland (VTT) to be bump-bonded with the pixel sensors.
- VTT will bump bond the sensors and the read-out chips, and will deliver the sensor modules to RIKEN as specified in a contract between RIKEN and CERN. A minimum of 150 fully functional sensor modules will be delivered.
- The Q/A of the sensor modules is the responsibility of RIKEN
- The Pixel bus and the bus extender is the responsibility of RIKEN.
- The SPIRO module is the responsibility of Ecole Polytechnique (France).
- Assembly of the pixel ladders is the responsibility of RIKEN
- The design, fabrication, and the testing of the FEMs is the responsibility of Stony Brook University, with funding from RIKEN.

- The pixel detector also uses the second generation DCMs that are being developed by PHENIX. The DCM R&D is outside of the scope of the VTX project. Fabrication of DCMs for the pixel detector is funded by the US DOE and will be fabricated and tested at Nevis, with Nevis personnel having responsibility for the delivery of working modules.

3.3 MECHANICS and INFRASTUCTURE

The mechanical support structure and infrastructure is the responsibility of US institutions within PHENIX. The mechanical support system is comprised of ladder staves that provide support and cooling for each pixel or strip ladder, and an overall structure for supporting the ladders. The internal position tolerance for the ladders within the VTX is 25 microns. The cooling system will be capable of removing up to 3100 Watts of heat from the device and is required to operate in nominal operating temperature between 0° and 20° C. The whole VTX will be in a dry gas environment of N_2.

The infrastructure for the VTX includes power supplies, racks, cooling system, control and monitoring, mechanical support between the pole-tips as well as installation rigs.

3.3.1 Definitions

- A mechanical stave is a basic mechanical component that includes the omega-shaped structural support piece, cooling tube(s), board (C-C thermal plane), and coupling system to attach to the barrel mount. There are two types of staves, pixel staves and strip staves. There are two kinds of pixel staves, layer 1 and layer 2 have different bending radii for the coolant tubes. There are two kinds of strip staves; layer 3 has five sensors and layer 4 has six sensors.
- A cooling tube is ductwork containing cooling fluid to remove heat generated by VTX electronics.
- A barrel mount is a "half-moon" shape structure that supports the ladders and connects them to the space frame. The staves will be pinned to the barrel mounts for indexing and alignment.
- The Space frame consists of two Graphite Fiber Reinforced Polymer (GFRP) halves that connect rigidly at the mid-plane and support the barrel detector half-cylinders via the barrel mounts.
- The Dry gas enclosure is the outer housing designed to prevent condensation on VTX electronics.
- The Cooling system comprises coolant, distribution system, controls and refrigeration. Baseline design calls for a single-phase coolant that is a Fluorinert coolant - Novec 7000, manufactured by 3M. The cooling system is composed of two parts, the internal system which is comprised from all components internal to the gas enclosure, and the external system which is composed of all components external to the gas enclosure including distribution, controls and refrigeration.
- The isolation mounts connect the VTX to mechanical support system.
- The mechanical support system is support beams for VTX between the PHENIX central magnet pole tips.

3.4 SUMMARY of DELIVERABLES and PROJECT Complete Requirement

Table 4 lists the performance deliverables of the VTX detector. These are evaluated at BNL before the installation of the detector to the PHENIX IR. The VTX Project manager is responsible for achieving these performance deliverables.

Table 4 Performance Deliverables of VTX

Item	Description
A) DCA resolution	σ_{DCA} <100 μm for p_T>2 GeV/c
B) Noise hit rate in the pixel detectors	< 0.1% w/ threshold set to < 0.3 MIP
C) S/B in the strip detectors	Pedestal width (1σ) is less than 15% of MIP
D) Detector dead area	< 10 % per layer of the detector in the acceptance of PHENIX central arm
E) Operating Temperature of the strip sensors	0° C ± 3° C
F) Stand-alone read-out rate	≥10 kHz

A) is evaluated based on measurements of the detector alignment during the assembly at BNL prior to final installation of the detector at the PHENIX IR. As these alignment as input, full detector simulation will be used to demonstrate that the required DCA resolution should be achieved. The accuracy of the alignment measurements and the accuracy of the simulation are demonstrated using cosmic rays or beam particles for a partially instrumented assembled detector. See milestone 1.5.3.4.

B) and C) are evaluated on the fully assembled detector on a bench at BNL based on the noise hit rate for the pixel detectors and the pedestal width for the strip detectors prior to the installation. The signal in the S/B ratio includes charge sharing between strips. Effects from cross talk between neighboring channels are included in criteria B) and C). As a final confirmation, these tests are repeated during the commissioning of the detector at the PHENIX IR with at least 25 % of the entire system active simultaneously in a read-out test. See milestone 1.5.3.4.

D) is evaluated on the fully assembled detector based on the dead area and masked channels found in the Q/A test during the detector assembly. See milestone 1.5.3.4.

E) is demonstrated by cooling down the fully assembled detector at the PHENIX IR during the commissioning while it is fully powered. See milestone 1.5.3.4.

F) is demonstrated in the system test of the pixel ladder and the strip ladder. In these test, final prototype ladders are read-out at 10kHz to the DCM. See milestone 1.4.3.5.

Note that the detector perfomance as specified in Table 4 shall not be degraded by or suffer from manifestations of signal cross-talk.

Table 5 lists the component deliverables that are the responsibilities of the US DOE and Table 6 lists the component deliverables that are contributed by RIKEN and French group. In the "working spares" column there is a hierarchy, i.e. some of the spare sensor

- Assembly and alignment fixtures are tools for fabrication of ladders. The fixtures align components (sensors, ROCs, stave, etc) of a ladder within the required mechanical tolerance and assemble them into a ladder.
- Power supply system includes all low voltage and bias voltage supplies and associated monitoring and control required for the VTX electronics.
- A new beryllium beam-pipe with a 4 cm inner diameter and with 500 μm nominal thickness will replace the existing larger beam pipe.

3.3.2 Responsibilities

- The design, prototyping, manufacturing of the mechanical staves, cooling tubes, barrel mounts, space frame, isolation (kinematic) mounts, dry gas enclosure, internal cooling distribution system, and fixtures for assembly and alignment will be contracted out to a mechanical design/fabrication company. The VTX mechanical project engineer and VTX integration subsystem manager will have oversight of the work performed at this company.
- The external cooling system (external distribution system, controls and refrigeration) is the responsibility of the VTX integration sub-system manager. It will be paid for by the VTX project, but designed and construction overseen by staff in the PHENIX operations group in consultation with the VTX mechanical project engineer.
- The mechanical support system for the VTX is the responsibility of the VTX integration sub-system manager. It will be paid for by the VTX project, but designed and construction overseen by staff in the PHENIX operations group in consultation with the VTX mechanical project engineer.
- The design and fabrication of the assembly and alignment fixtures is overseen by the VTX mechanical project engineer with the integration manager, the pixel manager, and the strip manager.
- The installation fixtures to support the VTX during installation are the responsibility of the VTX integration subsystem manager. It will be paid for by the VTX project, but designed and construction overseen by staff in the PHENIX operations group in consultation with the VTX mechanical project engineer.
- The infrastructure (racks, power, and cooling) for the power supply system, cooling system and the control systems to monitor operating conditions of the VTX is the responsibility of the VTX integration subsystem manager. It will be paid for by the VTX project, but designed and construction overseen by staff in the PHENIX operations group in consultation with the VTX mechanical and electrical project engineers.
- The power-supply systems for both the sensors and the read-out electronics is the responsibility of the VTX electrical project engineer. This work will be done in close collaboration with the strip and pixel subsystem managers. It will be paid for by the VTX project, but designed and construction overseen by staff in the PHENIX operations group.
- The design, fabrication, and installation of the beam-pipe is the responsibility of BNL and is not included in the scope of the VTX project.

modules are used to construct the spare ladders, the rest are kept separate as stand-alone spares. Similarly the spare ROCs are used in two ways; those found in the spare modules (including those assembled in ladders), and some ROCs are kept as stand-alone spares.

In summary, the strip system, mechanical system, infrastructure, and DAQ are in the US DOE scope, while the pixel detector is the contribution of RIKEN and French group, RIKEN also contributes the strip sensors and the SVX4 chips to the project. The SVX4 chips are used in Strip ROCs, 12 chips per ROC.

The PHENIX VTX project will be complete when all performance specifications as specified in Table 4 have been demonstrated at BNL and all component deliverables as specified in Table 5 and Table 6 are delivered. In addition, the following final project completion requirements must be met.

1) The VTX barrel is assembled and ready to install in the PHENIX IR.
2) All of the infrastructure to support the VTX barrel operation in the PHENIX IR is installed in the PHENIX IR and ready to accept the VTX barrel. This includes the cooling system, the LV/HV power supplies, the slow control systems, the safety systems, the cables, and the data fibers.
3) FEMs and DCMs for the VTX system are ready to accept the data from the VTX barrel.

Table 5 Component Deliverables of VTX (DOE)

Item	Number	Working Spares
Strip system		
Strip ROCs	246	84 (66 in spare modules)
Sensor modules	246	66 (33 in spare ladders)
Strip ladders	44	6 (3 R3+3 R4 ladders)
Strip Pilot modules	44	5
Strip FEMs	44	5
Mechanical system		
pixel staves	30	10 (2 in assembled ladders)
strip staves	44	20 (6 in assembled ladders)
Barrel mounts	12	2
Space frame	1	0
Suspension system	1	0
Dry gas enclosure	1	0
Infrastructure		
Cooling system	1	Spare components available
Power supply system	1	Spare components available
Cables and fibers	1	Spare components available
DCM		
Strip DCMs	44	5
Pixel DCMs	30	3

Table 6 In kind contribution to the VTX from RIKEN (R) and French (F) group

Item	Number in VTX	Working Spares
Strip system		
Sensors (R)	246	66 in sensor modules
SVX4 (R)	2952	1008 in spare ROCs
Pixel system		
Pixel ladders (R)	30	2
SPIRO modules (F)	60	6
Pixel bus (R)	60	4
Pixel FEMs (R)	30	3

4 MANAGEMENT ORGANIZATION

4.1 GENERAL

This document provides the management organization and delineates responsibilities within the project. Figure 3 shows the proposed management structure for the PHENIX VTX fabrication project.

4.2 PROJECT MANAGEMENT RESPONSIBILITIES

4.2.1 DOE project management

The DOE Office of Nuclear Physics (NP) has overall DOE responsibility for the project. Jehanne Simon-Gillo is the Federal Program Manager for the project.

- Provides programmatic direction.
- Functions as DOE headquarters point of contact for the project.
- Oversees development of project scope and budget.
- Prepares, defends, and provides project budget with support from the field organizations.
- Approves appropriate baseline changes.
- Participates in Quarterly Reviews and project reviews.

4.2.2 BNL project oversight

The BNL project oversight manager is Thomas Ludlam, BNL. The BNL project oversight manager will be administratively and fiscally responsible for the project. In particular he will:

- Provide overall management oversight for all aspects of the project.
- Responsible and accountable for the successful execution of the project.
- Approve key personnel appointments made by the project manager.
- Approve major subcontracts recommended by the project manager.
- Manage the distribution of contingency funds for the project.
- Ensure that the project has demonstrated that it meets the functional requirements.
- Review quarterly status reports.
- Schedule and organize external reviews of the project.
- Ensure the work is performed safely and in compliance with the ISM rules.
- Ensures ES&H requirements are implemented by the project.

The BNL project oversight manager will keep the BNL management and the DOE informed about the technical goals and performance of the project. He will conduct periodic reviews to insure that the project continues to serve the long-term interests of the laboratory's research program through the related upgrades of the detectors and the RHIC collider.

4.2.3 PHENIX Collaboration Management

The PHENIX Collaboration Management has overall responsibility for the successful execution of the scientific operation of the PHENIX detector. Barbara Jacak (Stony Brook) is the PHENIX Spokesperson. Axel Drees (Stony Brook) is the PHENIX

Upgrades Manager, and has direct responsibility within PHENIX, along with the Operations Manager, for oversight of the VTX project. Edward O'Brien (BNL) is the PHENIX Operations Manager, and has responsibility of the operation of PHENIX and for oversight of all subsystems/detectors in PHENIX. Don Lynch (BNL) is the chief engineer of PHENIX and is responsible for the engineering and technical support. The PHENIX Management is responsible for the integration of the VTX detector into PHENIX, and provides the technical support for the commissioning and operation of the completed detector. The PHENIX Management reviews and approves any changes to the baseline performance parameters of the VTX, according to specified change control procedures.

4.2.4 Project management office

The VTX project office consists of the project manager and the deputy project manager, along with the project electrical and mechanical engineers. In general, the project manager is responsible for the overall management and the successful execution of the project, including integration of the DOE scope with the Japanese and French scopes, and delivering all project deliverables including the DOE project scope. The deputy project manager is responsible for tracking the performance of the DOE portion of the VTX. The project engineers are responsible for the electronic and mechanical integration of the VTX detector and its integration into PHENIX. They are also providing oversight of both the strip and pixel subsystems. Since VTX shares its mechanical support system with the FVTX upgrade detector, the mechanical project engineer is also responsible for the mechanical integration with FVTX. The boundary between the VTX and FVTX as well as the boundary between the VTX and the rest of PHENIX is administered by the PHENIX Management through its chief engineer.

The full VTX project office will meet regularly as a group as well as with the PHENIX management to assure that the project meets the performance, schedule and budget goals.

The project manager is Yasuyuki Akiba, RIKEN.

Responsibilities

The project manager reports to the BNL project oversight manager. The project manager will have the following responsibilities:

- With the BNL Oversight Manager, responsible and accountable for the successful execution of the project.
- Delivers project deliverables including the DOE project scope.
- Keeps the PHENIX management and Executive council informed on the progress of the project.
- With the project engineers and PHENIX operations manager, ensures that the project integrates properly into the PHENIX detector and with existing subsystems.
- Identifies and ensures timely resolution of critical issues.
- Allocates funds with deputy project manager with consultation with subsystem managers.
- Appoints subsystem managers with the approval of PHENIX management.

- Organizes and holds regular meetings (monthly and quarterly) of the VTX group, with the deputy project manager. The subsystem managers hold weekly meetings of their groups.
- Chairs the VTX group meetings.
- Submits quarterly status reports, with the deputy project manager.
- Ensures the work is performed safely and provides necessary ES&H documentation, with the deputy project manager and PHENIX safety manager.
- Responsible with the project engineers and subsystem managers for the technical direction of the project.
- Controls changes in the system design requirements, including interfaces between subsystems, with the project engineers.
- Responsible with the deputy project manager and subsystem managers for providing documentation and presentations for project reviews.
- Responsible with the deputy project manager and subsystem managers for developing and maintaining project documentation meeting PHENIX documentation standards.

The deputy project manager is Craig Ogilvie, Iowa State University.
Responsibilities
The deputy project manager and the project manager report to the BNL project oversight manager. The deputy project will have the following responsibilities:

- With the project manager, responsible and accountable for the successful execution of the project.
- Under the direction of the project manager, delivers project deliverables.
- Supervises the electrical and mechanical project engineers.
- Implements a performance measurement system.
- Develops functional requirements with the project engineers and subsystem managers.
- Identifies and ensures timely resolution of critical issues.
- Chairs the VTX group meetings when the project manager is not available.
- Develops with the subsystem managers quarterly status reports. The report includes time schedule and spending report.
- Ensures the work is performed safely and provides necessary ES&H documentation, with the PHENIX safety manager.
- Responsible with the project manager and subsystem managers for providing documentation and presentations for project reviews.
- Responsible with the project manager and subsystem managers for developing and maintaining project documentation meeting PHENIX documentation standards.

The electronic project engineer is Eric Mannel, Columbia University.
Responsibilities

- Responsible for electronic integration of the VTX detector and its electronics integration into PHENIX.

- In order to fulfill the above responsibility, provides electrical oversight for the pixel and strip subsystems.
- Responsible with the subsystem managers for developing and maintaining the documentation of the electronics and electric system meeting PHENIX documentation standards.
- Approves with subsystem managers Q/A procedures and benchmarks for components before they are assembled into ladders.
- Approves with subsystem managers Q/A procedures and benchmarks for assembled ladders.
- Responsible for grounding plan and implementation.
- Responsible for power supply system.
- Under the direction of the project and deputy project managers, delivers project deliverables.
- Identifies and ensures timely resolution of critical issues.
- Responsible with the project and deputy project managers for providing documentation and presentations for project reviews.

The mechanical project engineer is Walter Sondheim, LANL.

Responsibilities

- Together with the integration subsystem manager, responsible for mechanical integration of the VTX detector and its mechanical integration with PHENIX.
- Develops with the integration subsystem manager the specifications of the VTX, including position requirements and cooling requirements.
- Responsible for oversight of external contractors for procurement of mechanical components.
- In order to fulfill the responsibility on the integration of the VTX, provides mechanical oversight for each of the pixel and strip subsystems.
- Responsible with the subsystem managers for developing and maintaining the documentation of the mechanical system meeting PHENIX documentation standards.
- Develops with subsystem managers the assembly and alignment procedures for assembling components into ladders.
- Approves with subsystem managers Q/A procedures and benchmarks for assembled ladders.
- With the project and deputy project managers, delivers project deliverables.
- Identifies and ensures timely resolution of critical issues.
- Responsible with the project and deputy project managers for providing documentation and presentations for project reviews.

4.2.5 Subsystem managers

Each of subsystem managers is responsible for one of the four major subsystems: strip detector, pixel detector, integration, and software. The subsystem managers and deputy subsystem managers are:

- Pixel detector: Atsushi Taketani (RIKEN)

- Strip detector: Abhay Deshpande (Stony Brook) and Rachid Nouicer (deputy, BNL)
- Integration: Robert Pak (BNL)
- Software: Alexandre Lebedev (ISU)

The subsystem managers report directly to the VTX project office and will be responsible for the design, construction, installation, and testing of their subsystem in accordance with the performance requirements, schedule, and budget.

Responsibilities for subsystem managers

- Assemble the staff and resources needed to complete the subsystem in collaboration with the project and deputy project managers
- Develop and follow the system design requirements
- Ensure that subsystems meet the system design requirements, including interfaces
- Responsible for carrying out the design, construction and assembly of the subsystem in accordance with the scope, schedule and budget
- Provide monthly reports on the status of the subsystem to the deputy project manager
- Ensure the work is performed safely and provide necessary ES&H documentation
- Responsible with the project and deputy project managers for providing documentation and presentations for project reviews
- Develop and maintain the documentation of the subsystem.

In addition to these general responsibilities, each subsystem manager has the following specific responsibilities:

Pixel detector manager:

- Liaison with vendor for bump-bonding
- Liaison with vendor for bus-production

Strip detector manager:

- Liaison with vendor for sensor production
- Liaison with FNAL for SVX4

Integration manager:

- Liaison, together with David Lee, LANL, with mechanics vendor
- Liaison with C-AD department at RHIC
- Liaison, together with VTX mechanical project engineer, with PHENIX project and safety engineers

Software manager

- Liaison with PHENIX offline and online software management
- Responsible for the VTX reconstruction software
- Responsible for the VTX simulation
- Responsible for the VTX detector calibration and alignment software

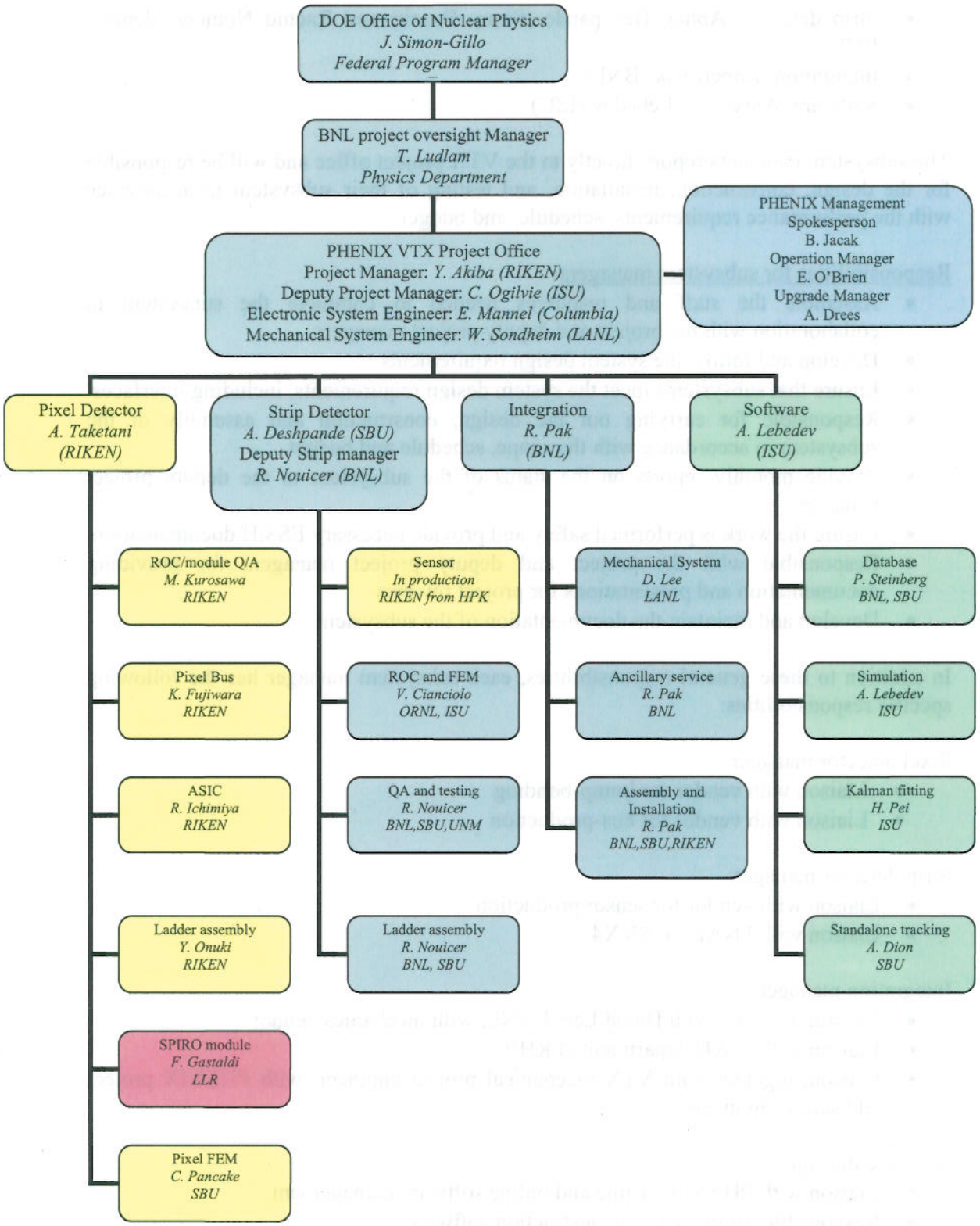

Figure 3 Management chart for the PHENIX VTX fabrication project. The part of the scope of RIKEN and French group are shown in yellow and pink, respectively. Supporting efforts for the project by scientists are shown in light green.

5 Schedules and Budget

The PHENIX VTX project has been organized into a work breakdown structure (WBS) for purposes of planning, managing and reporting project activities. Work elements are defined to be consistent with discrete increments of project work.

5.1 Schedule

Figure 4 is a Gantt chart of the project milestones, consistent with the WBS. The DOE project begins in the third quarter FY07 and ends in the fourth quarter FY10. The RIKEN milestones lie within the Pixel WBS task 1.1.2. Table 7 to Table 10 show the project management and control milestones for FY07, FY08, FY09 and FY10 respectively. Items in blue are the responsibility of the RIKEN/French groups.

Figure 5 is a Gantt chart showing the critical path of the project. The schedule includes explicit schedule contingency. The total schedule contingency on the critical path items is 40 weeks. A more detailed Gantt chart showing the activities are shown in Appendix A. This schedule keeps open the possibility of installing a partially instrumented VTX in the summer of 2009 using available pixel and/or strip ladders.

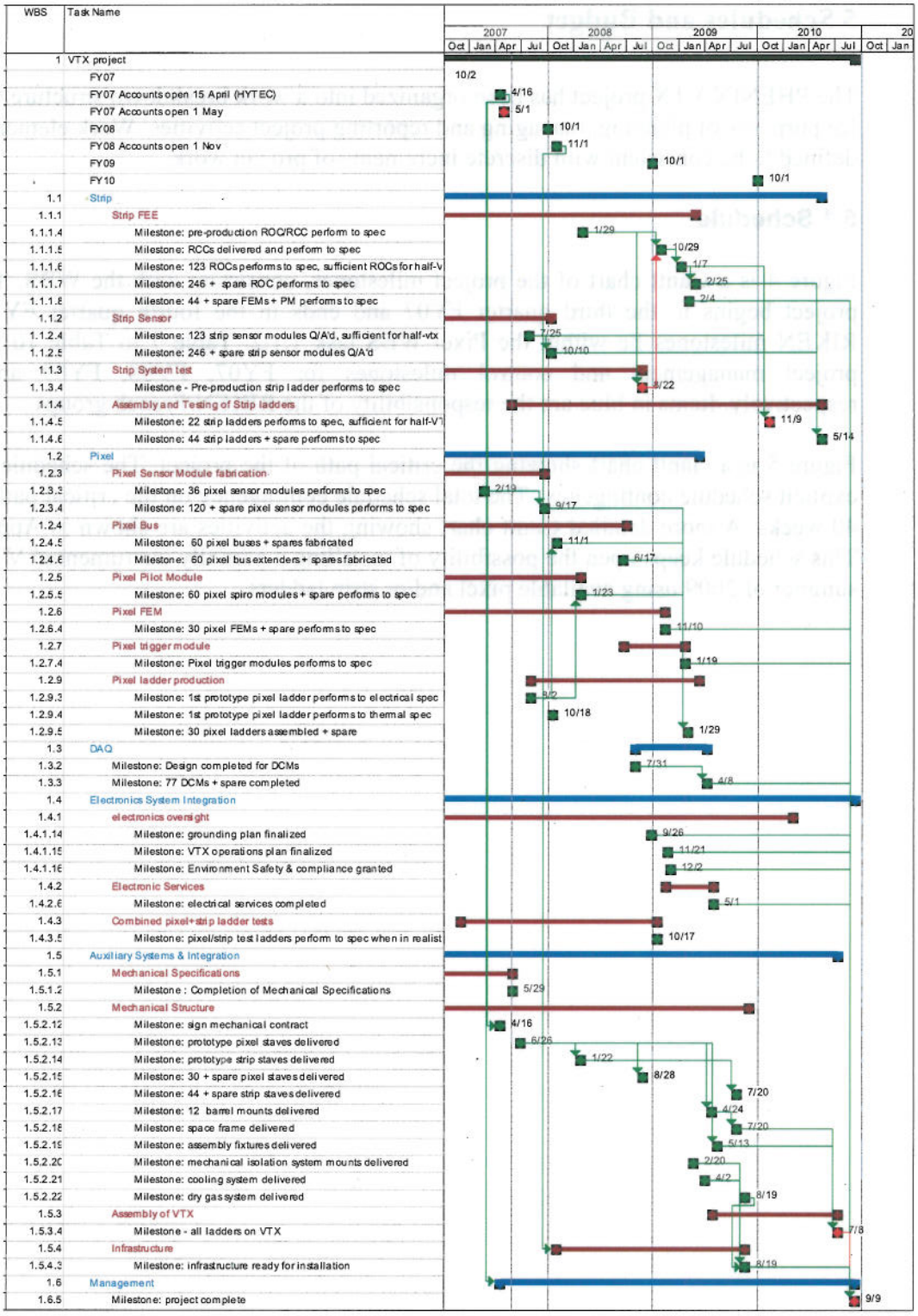

Figure 4 Milestones of the PHENIX VTX project. The year column shows the US Fiscal Year.

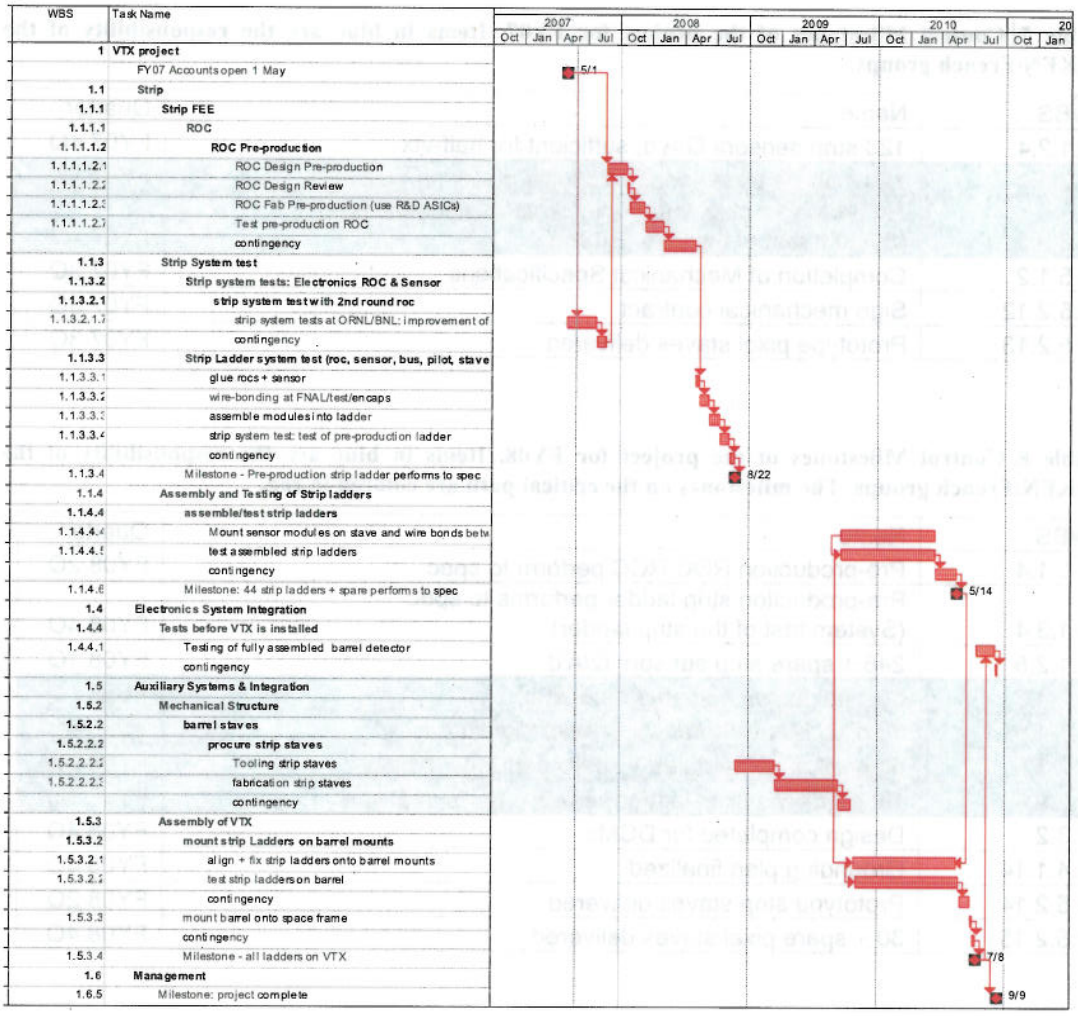

Figure 5 Critical path for the PHENIX VTX project. The year column shows the US Fiscal year.

Table 7! Control Milestones of the project for FY07. Items in blue are the responsibility of the RIKEN/French groups.

WBS	Name	Quarter
1.1.2.4	123 strip sensors Q/A'd, sufficient for half-vtx	FY07 4Q
1.2.3.4	120 + spare pixel sensor modules performs to spec	FY07 4Q
1.2.9.3	1st prototype pixel ladder performs to electrical spec (System test of the pixel ladder)	FY07 4Q
1.5.1.2	Completion of Mechanical Specifications	FY07 3Q
1.5.2.12	Sign mechanical contract	FY07 3Q
1.5.2.13	Prototype pixel staves delivered	FY07 3Q

Table 8 Control Milestones of the project for FY08. Items in blue are the responsibility of the RIKEN/French groups. The milestones on the critical path are colored in red.

WBS	Name	Quarter
1.1.1.4	Pre-production ROC/RCC perform to spec	FY08 2Q
1.1.3.4	Pre-production strip ladder performs to spec (System test of the strip ladder)	FY08 4Q
1.1.2.5	246 + spare strip sensors Q/A'd	FY08 1Q
1.2.4.5	60 pixel buses + spares fabricated	FY08 1Q
1.2.4.6	60 pixel bus extenders + spares fabricated	FY08 3Q
1.2.5.5	60 pixel spiro modules + spare performs to spec	FY08 2Q
1.2.9.4	1st prototype pixel ladder performs to thermal spec	FY08 1Q
1.3.2	Design completed for DCMs	FY08 4Q
1.4.1.14	Grounding plan finalized	FY08 4Q
1.5.2.14	Prototype strip staves delivered	FY08 2Q
1.5.2.15	30 + spare pixel staves delivered	FY08 4Q

Table 9 Control Milestones of the project for FY09. Items in blue are the responsibility of the RIKEN/French groups.

WBS	Name	Quarter
1.1.1.5	RCCs delivered and perform to spec	FY09 1Q
1.1.1.6	123 ROCs performs to spec, sufficient ROCs for half-VTX	FY09 2Q
1.1.1.7	246 + spare ROC performs to spec	FY09 2Q
1.1.1.8	44 + spare FEMs + PM performs to spec	FY09 2Q
1.2.6.4	30 pixel FEMs + spare performs to spec	FY09 1Q
1.2.7.4	Pixel trigger modules performs to spec	FY09 2Q
1.2.9.5	30 pixel ladders assembled + spare	FY09 2Q
1.3.3	77 DCMs + spare completed	FY09 3Q
1.4.1.15	VTX operations plan finalized	FY09 1Q
1.4.1.16	Environment Safety & compliance granted	FY09 1Q
1.4.2.6	Electrical services completed	FY09 3Q
1.4.3.5	Pixel/strip test ladders perform to spec when in realistic proximity (Combined System Test of the pixel and the strip ladders)	FY09 1Q
1.5.2.16	44 + spare strip staves delivered	FY09 4Q
1.5.2.17	12 barrel mounts delivered	FY09 3Q
1.5.2.18	Space frame delivered	FY09 4Q
1.5.2.19	Assembly fixtures delivered	FY09 3Q
1.5.2.20	Mechanical isolation system mounts delivered	FY09 3Q
1.5.2.21	Cooling system delivered	FY09 3Q
1.5.2.22	Dry gas system delivered	FY09 4Q
1.5.4.3	Infrastructure ready for installation	FY09 4Q

Table 10 Control Milestones of the project for FY10. The milestones on the critical path are colored in red.

WBS	Name	Quarter
1.1.4.5	22 strip ladders performs to spec, sufficient for half-VTX	FY10 1Q
1.1.4.6	44 strip ladders + spare performs to spec	FY10 3Q
1.5.3.4	All ladders on VTX	FY10 4Q
1.6.5	Project complete	FY10 4Q

5.2 BUDGET

Table 11 shows the cost summary for the VTX project in FY07 dollars and the required annual funding profile in at-year (AY) dollars is shown in Table 12. The budget includes the cost contingency that is evaluated by the method described below. The Total Project Cost (TPC) is $4.70M (AY$) and the Total Estimated Cost (TEC) is $4.63M (AY$). Note that the budget allocation profile, shown in the first column of Table 12 is the project commit profile. The VTX expenditure profile, shown in the second column is naturally delayed with respect to the commit profile.

Contingency

The BNL project oversight Manager manages the contingency funds according to the approved procedures. Contingency is allocated under the change control procedures described in section 7. The average contingency is 25 %. This section describes how the contingency for a given WBS element is to be calculated based on the risk associated with the element.

Risk is a function of the following factors: the sophistication of the technology, the maturity of the design effort, the accuracy of the cost sources and the impact of delays in the schedule. Risk analysis is performed for each WBS element at the lowest level estimated. Results of this analysis are related to a contingency which is listed for each WBS element. The goal is to make the method of contingency determination as uniform as possible for all project WBS elements.

Definitions

> **Base Cost Estimate** – The estimated cost of doing things correctly the first time. Contingency is not included in the base cost.
>
> **Cost Contingency** – The amount of money, above and beyond the base cost, that is required to ensure the project's success. This money is used only for omissions and unexpected difficulties that may arise. Contingency funds are held by the BNL oversight Manager.

The contingency % is calculated for each WBS item as:

$$\text{Cont \%} = \text{technical risk factor} \times \text{Base\%} + \text{cost risk factor} \times \text{Base\%} + \text{schedule risk factor} \times \text{Base\%}$$

For the majority of the project, Base%=7.5%, the exception is the strip FEE cost estimates where the Base% is evaluated for different items and ranges from 4 to 10%. In the contingency calculation, the following risk factors are considered.

Risk Factors

1) Technical Risk – Based on the technical content or technology required to complete the element, the technical risk indicates how common the technology is that is required to accomplish the task or fabricate the component. If the technology is so common that the element can be bought "off-the-shelf", i.e., there are several vendors that stock and sell the item, it has very low technical risk, therefore a risk factor of 1 is appropriate. On the

opposite end of the scale are elements that extend the current "state-of-the-art" in this technology. These are elements that carry technical risk factors of 4. Between these are: making modifications to existing designs (risk factor 1.5), creating a new design which does not require state-of-the-art technology (risk factor 2, and creating a design which requires R&D, and advances the state-of-the-art slightly (risk factor 3).

2) Cost Risk – Cost risk is based on the data available at the time of the cost estimate. It is subdivided into 4 categories.

The first category has a risk factor between 1 and 2. It includes elements for which there is a recent price quote from a vendor or a recent catalog price. If the price of the complete element, or the sum of its parts, can be found in a catalog, the appropriate risk factor to be applied is 1. If there is an engineering drawing or specification for the element, and a reliable vendor has recently quoted a price based on these, the cost risk factor to be applied is between 1 and 2.

The second category has a risk factor of 2. It includes elements for which there exists some relevant experience, e.g. if the element is similar to something done previously with a known cost, or if the element is something for which there is no recent experience, but the capability exists.

The third category has a risk factor of 3. It includes is for elements for which there is information that, when scaled, can give insight into the cost of an element or series of elements.

The fourth category has a risk factor of 4. It includes is for elements for which there is an educated guess, using the judgment of engineers or physicists.

3) Schedule Risk – If a delay in the completion of the element could lead to a delay in a critical path or near critical path component, the schedule risk is 3. If a delay in the completion of the element could cause a schedule slip in a subsystem which is not on the critical path, the schedule risk is 2. Only elements where a delay in their completion would not affect the completion of any other item have schedule risks of 1.

Table 11! The cost summary for the PHENIX VTX project. Amounts are in FY07 kilo-dollars.

WBS	Task Name	Material k$	Personnel k$	BNL transfer k$	Conting. %	Conting. k$	TEC, k$	Preops k$	TPC k$
1	VTX project	1,393	1,962	226	25	891	4,471	61	4,532
1.1	Strip	591	705	10	25	322	1,628	0	1,628
1.2	Pixel	0	0	0		0	0	0	0
1.3	DAQ	99	30	23	25	38	190	0	190
1.4	Electronics System Integration	140	348	59	21	116	663	0	663
1.5	Auxiliary Systems & Integration	562	792	123	27	404	1,881	0	1,881
1.6	Management	0	87	11	11	11	109	0	109
1.7	Installation	0	0	0		0	0	61	61

Table 12 The DOE budget allocation profile (budget authority profile) of the VTX Project and the planned expenditures profile. The budget authority profile proceeds the expenditure profile. An inflation rate for 2 % for material and 4% for workforce is assumed in the AY dollars.

WBS	Name	TPC FY07 k$	FY07 AY k$	FY08 AY k$	FY09 AY k$	FY10 AY k$	TPC AY k$
	DOE budget allocation profile (Budget authority profile)		1,000	2,400	1,200	100	4,700
1	VTX project expenditure profile	4,532	1,000	1,706	1,688	306	4,700
1.1	Strip	1,628	384	848	443	0	1,676
1.3	DAQ	190	0	0	200	0	200
1.4	Electronics System Integration	663	65	135	353	152	705
1.5	Auxiliary Systems & Integration	1,881	539	681	648	72	1940
1.6	Management	109	12	42	43	14	111
1.7	Installation	61	0	0	0	68	68

6 RISK

The project manager and the deputy project manager will mitigate risk through routine monitoring of the progress and performance of the project, including monthly VTX teleconferences, quarterly full-day VTX meetings, weekly and bi-weekly meetings of the subsystems and monthly meetings with PHENIX and BNL management. The final responsibility for risk management will rest with the project and deputy project managers. However, effective risk management requires the involvement of all project members.

We have identified 11 system-level risks. Each of these is summarized below along with the mitigation strategy.

1. Technical: Performance of strip ROC-sensor in close proximity (high). This risk will be mitigated by
    a. Performing two rounds of system tests, the first in spring/summer 07 with different shielding configurations, and the second with the pre-production prototype in summer 08 (Milestone: WBS 1.1.3.4).
2. Technical: Performance of Pixel/Strip detectors in close proximity (medium) This risk will be mitigated by
    a. Performing two rounds of system tests where we operate both pixel+strip prototype ladders in close proximity and compare their performance to stand-alone operation. These combined tests are scheduled for Fall 07 and Fall 08 (Milestone: WBS 1.4.3.5).
3. Technical: Thermal stress of pixel and strip ladder assemblies (medium) This risk will be mitigated by
    a. Communicating full information on the ladder stackups to Mechanical design firm (HYTEC) for their simulation.
    b. Performing thermal cycle tests of both the pixel and strip ladders to check for mechanical and electrical integrity under thermal expansion and contraction. These tests will be executed for each new prototype ladder that is produced (Milestone. WBS 1.2.9.4 for the pixel and WBS 1.1.3.4 for the strip).
4. Cost & Schedule: Interface with Mechanical design firm (HYTEC) (medium) To ensure successful delivery of the mechanical components
    a. The VTX mechanical engineer is meeting weekly with HYTEC
    b. HYTEC provides a monthly report in a meeting with the VTX office
5. Technical: Integration of VTX electronic and control system into PHENIX, i.e. slow control, monitoring, calibration, integration into DAQ (medium)
    a. The VTX electrical engineer will hold a series of planning meetings with the PHENIX managers of these subsystems, to develop and then review a VTX operating plan. The operating plan is scheduled for Fall 08.
6. Technical: Signal to noise degradation due to ground loops (high)
    a. The VTX electrical engineer will develop a grounding plan in consultation with all stakeholders (pixel, strip and mechanical groups, as well as PHENIX experts). The grounding plan is scheduled in Fall 08 (Milestone: WBS 1.4.1.14).

b. Adherence to the grounding plan will be part of all design reviews before fabrication of components.
c. In-situ grounding checks are scheduled during the commissioning of the VTX.

7. Schedule: Pixel bump-bonding (medium)
This task is dependent on an outside vendor so there is an increased risk due to changes in schedule. We have mitigated this by
   a. Maintaining close communication with the vendor
   b. Increasing the schedule contingency for bump-bonding by approximately 50%
8. Technical: Performance of the pixel bus (high)
The pixel bus carries both data and power lines.
   a. Extensive development and testing have been performed, and the final test for the pixel bus will come from its realistic use in the prototype pixel ladder that comprises of the pixel bus + SPIRO + FEM. This test is scheduled for summer 07 (Milestone: WBS 1.2.9.3).
9. Technical & Schedule: RCC and ROC development (high)
The RCC is a custom ASIC and has an inherent technical and schedule risk due to time between production cycles. We have mitigated this risk by
   a. Applying additional pre-project R&D $ in FY06 to accelerate the design/prototype of the RCC ASIC.
   b. In case we find unexpected problem in RCC development, use FNAL developed transceiver chip as a backup solution.
10. Technical & Schedule: Start of production of major components. (medium)
The decision to start item's production is an inherent risk in that it is an irreversible decision. To mitigate this risk we have
   a. Added a formal review process before any item's productions
11. Technical: VTX/FVTX integration (medium)
These two PHENIX upgrades have several points of contact in physics, space, mechanics and integration. To mitigate the risk of problems at these interfaces we will
   a. Regularly schedule updates from the FVTX at quarterly VTX meetings and visa versa.
   b. Both the VTX mechanical and electrical engineers are part of the FTVX project so they communicate information vital to both projects.

7 CHANGE CONTROL

All changes to the technical, cost and schedule baselines shall be identified, controlled, and managed through a traceable, documented change control process using the thresholds described in Table 13.

Items that fall under this Change Control Procedure include the following:

- VTX Engineering Drawings and Schematics with revision "A" or higher
- Controlled VTX Notes with revision "A" or higher
- Statements of Work
- Specifications
- Memorandum of Understanding
- Requirements Documents
- Lists of Deliverables
- WBS Dictionary
- Project Schedule
- Interface/Integration Specifications
- Integration Envelopes
- Documented Work Procedures
- Rigging Procedures
- Operations Procedures
- VTX Detector Baseline Configuration

VTX change control will follow a graded approach with three (3) levels of project impact. All changes are reportable to the VTX Project Management Office for tracking and all three levels require project office approval. Changes which only affect a single subsystem do not impact the subsystems interfaces, overall performance, cost, or schedule goals, will be managed and controlled by the subsystem managers. Level 1, 2, & 3 changes will possess one or more of the following attributes:

- Physical interface: the envelope within which the element will be contained.
- Utilities interface: the location, size, and rate of "flow" of utilities supplied.
- Signal interface: the location, number and size of input/output signal cabling.
- Structural interface: the location, number, shape, size, hole pattern, etc., of the element component from which the subsystem is supported or aligned.
- Parameters, function, and requirements which are used to define the technical scope and specification of the element component.
- Significant cost or the possibility of affecting the subsystem delivery schedule.

Table 13 defines the three categories of changes and the method of review and approval level required for each.

Table 13 Change approval levels.

Level	Cost, Schedule, and Technical Impact	Review/Approval
1	Any deviation from total project cost or cumulative allocation of contingency > $500k; WBS control milestone delay >3-months; Technical deviation that significantly impacts other PHENIX subsystems or impacts baseline parameters in project deliverables in section 3.	Below, plus DOE NP Program Manager
2	Any deviation from Level-2 project cost or cumulative allocation of contingency > $250k; WBS level 3 milestone delay >2-months; Technical deviation with impact on other PHENIX subsystems but doesn't affect baseline parameters or DOE technical scope in section 3.4	Below, plus PHENIX Management, BNL Management,
3	Any deviation from Level 2 project cost or cumulative allocation of contingency > $50k; WBS level 3 milestone delay >1-month; Technical deviation without any impact on other subsystems and doesn't affect baseline performance parameters.	VTX Project Office

8 ASSESSMENTS

8.1 ENVIRONMENT, SAFETY AND HEALTH

Environment, safety and health (ES&H) will be integrated into all phases of planning and implementation through to the final design and production processes of the project. The project engineers and mechanical subsystem managers will interface through the PHENIX safety manager to BNL C-AD safety management. The project will conform to BNL's Integrated Safety Management policies.

8.2 QUALITY ASSURANCE

"Quality" is defined as the "fitness of an item or design for its intended use" and Quality Assurance (QA) as "the set of actions taken to avoid known hazards to quality and to detect and correct poor results." The project and deputy project managers will work with the subsystem managers and PHENIX operations management to assure that performance goals are met.

9 PROJECT CONTROLS AND REPORTING SYSTEMS

Technical performance will be monitored throughout the project to insure conformance to approved functional requirements. Design reviews and performance testing of the completed systems will be used to ensure that the equipment meets the functional requirements. For each main system of the VTX project: there will be the following reviews:

- Design review including detailed concept for the system, detailed cost and schedule.
- Pre-production review, all details settled. A small number of units will be produced and tested, and the performance reported.
- Final design review, final cost and schedule, production QA and testing procedures.
- PHENIX and BNL safety reviews.
- PHENIX operations readiness review.

Technical information concerning the project that is of interest to the VTX collaboration and the PHENIX collaboration will be published and archived in the existing PHENIX Technical Note system. In general PHENIX Technical Notes are documents about a topic of a technical subject. These documents should be of an archival nature. PHENIX Technical Notes concerning VTX can document requirements, specifications, procedures or policies, and are controlled and approved by the VTX Project Office. The reason for issuing a PHENIX Technical Note is to insure that members of the collaboration and project are aware of its content and are made aware of changes when they occur. Practically this is accomplished by the project office announcing to the collaboration/project that a new PHENIX Technical Note has been issued.

10 INSTITUTIONAL PARTICIPATION

At this point, 19 institutions participate in the VTX project. The institutions and their anticipated project responsibilities are listed in Table 14. In the responsibility column, the non-DOE scope is colored in blue.

Table 14 VTX Project Institutional Participation

Institution	Project Responsibility and participation
Brookhaven National Laboratory (BNL physics, and BNL Instrumentation Division)	VTX detector assembly VTX detector integration to PHENIX E,S,H&Q Detector infrastructure Strip detector Q/A, testing, assembly Database software
Charles University (Czech)	Pixel testing, software
Columbia University	Oversight of electrical system VTX detector electrical integration DCM
Ecole Polytechnique (France)	SPIRO module
Florida State University (NFS)	Simulation study
Iowa State University	Project management Software Strip FEM
Institute of Physics, Academy of Science, Prague (Czech)	Pixel testing, software
KEK (Japan)	Pixel assembly
Kyoto University (Japan)	Simulation study
Los Alamos National Laboratory	Oversight of the mechanical system Mechanical system
Niigata University (Japan)	Pixel bus, Pixel Q/A and testing
OakRidge National Laboratory	Strip ROC, strip FEM
RIKEN (Japan) and RBRC	Project management Pixel ASIC, Pixel Q/A and testing Pixel bus, Pixel assembly Strip sensor, SVX4 chip
Rikkyo University (Japan)	Strip sensor radiation damage testing
Stony Brook University	Pixel FEM Strip detector Q/A, testing, assembly
Tokyo Institute of technology (Japan)	Pixel Q/A and testing
University of New Mexico	Strip Q/A and testing