NOTES:

REVISIONS							
REV	ZONE	ECN NO.	DESCRIPTION	BY	DATE	CKR	APP
A			INITIAL RELEASE				

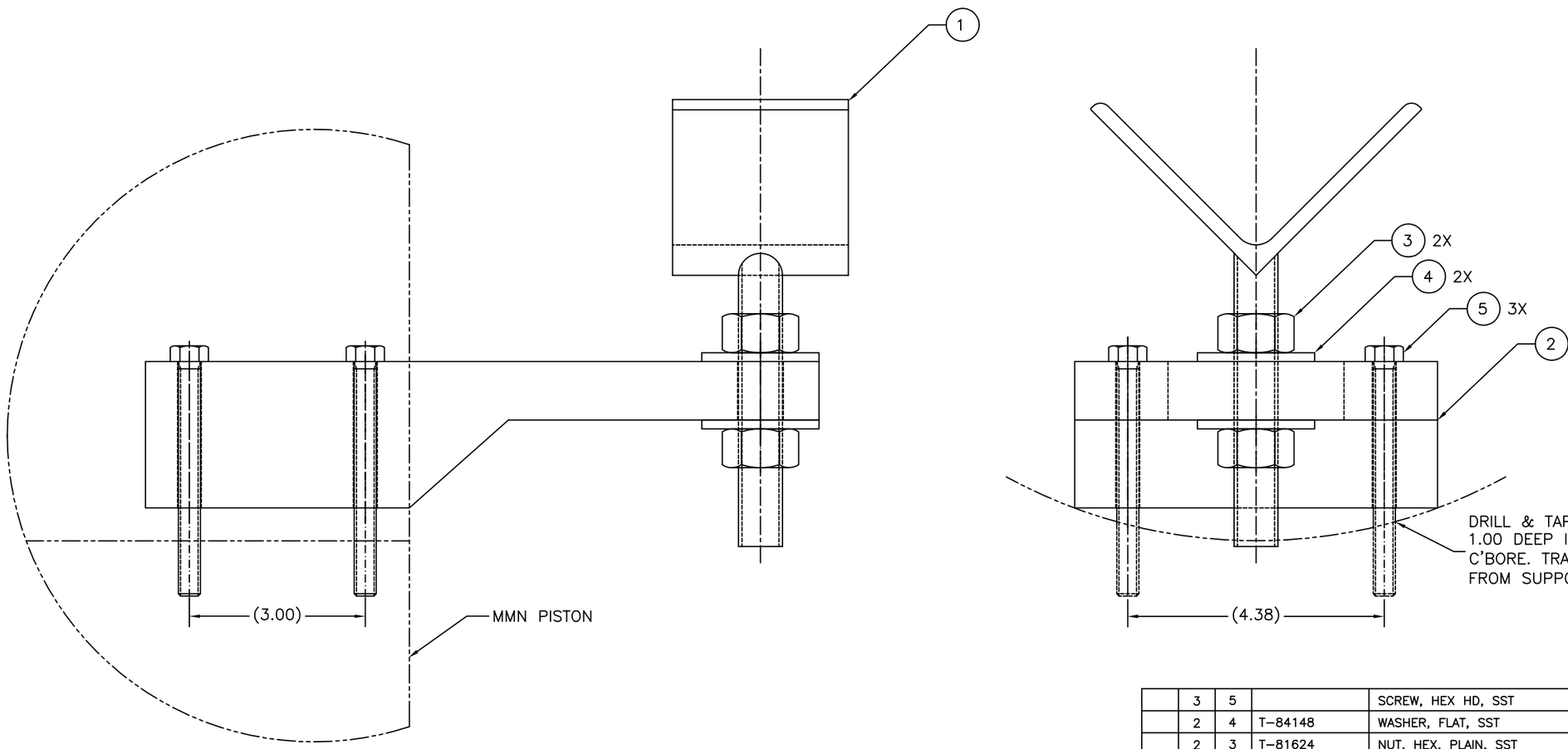

QUANTITY		ITEM NO.	PART NUMBER	DESCRIPTION	REMARKS
	3	5		SCREW, HEX HD, SST	.375–16 X 4.00
	2	4	T–84148	WASHER, FLAT, SST	.750
	2	3	T–81624	NUT, HEX, PLAIN, SST	.750–10
	1	2	002–0503–037	SUPPORT BRACKET	
	1	1	002–0503–036	SUPPORT WELDMENT	

BILL OF MATERIALS

USED ON DRAWING NO.	QTY. PER ASS'Y.
002–0503–026	1

APPLICATION

OUTSTANDING ECN NUMBERS

INTERPRET IN GENERAL ACCORDANCE WITH ASME Y14.24M–1989

UNLESS OTHERWISE SPECIFIED

DIMENSIONS ARE IN INCHES
DECIMAL TOLERANCES
.X ± .06
.XX ± .02
.XXX ± .005
ANGULAR TOLERANCE ± 1°

FINISH: NA

BREAK SHARP EDGES MAX. .03 MIN. .01

RHIC

DRAWN BY	BOHNENBLUSCH	11/18/98
DESIGN APPROVAL		
CHECKED BY		
ENGINEER APPROVAL		
SUPERVISOR APPROVAL		
Q.A. APPROVAL		

BROOKHAVEN NATIONAL LABORATORY
UPTON, N.Y. 11973

TITLE: PHENIX BEAMLINE SUPPORT SLIDING B/L SUPPORT ASSY

SIZE: D | DRAWING NUMBER: 002–0503–038 | REV. A

Q.A. CATEGORY: A–3 | SCALE: 1/1 | WEIGHT: NA | SHEET 1 OF 1

DWG NO. 002–0503–038 | SHT 1 OF 1 | REV A