Precision Thick Film Chip Resistors

Type: **ERJ**

ERJ3E, 6E, 8E, 14, 12 Series
ERJ2R, 3R, 6R Series

■ Features

- Small size and lightweight
  For PCB size reduction and lightweight products
- High reliability
  Metal glaze thick film resistive element and three layered electrode results in high reliability.
- Matching with placement machines
  Bulk, Taping and magazine packagings for automatic placement machines
- Solderability
  Suitable for both reflow soldering and flow soldering

Marking

- Four digit marking of nominal resistance value on resistive element side (except 2R, 3E Type)
- High power
  One rank up approval of power rating is available for 3E, 6E, 8E type
- Low Resistance Tolerance
  ERJ3E, 6E, 8E, 14, 12 Series ... ±1%
  ERJ2R, 3R, 6R Series ..... ±0.5%, ±1%
- Approved under the ISO-9001 system
  Approved under the QS-9000 system

- Conforming to:

IEC115-8, JIS C5223

- Explanation of Part Numbers (ERJ3E, 6E, 8E, 14, 12 Series)

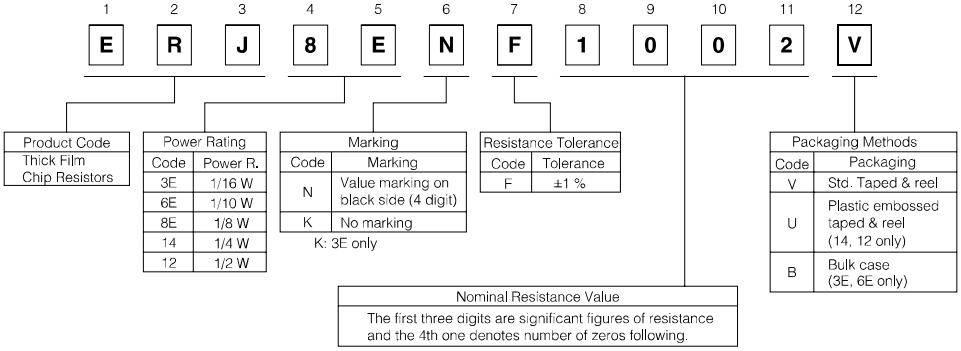

- Explanation of Part Numbers (ERJ2R, 3R, 6R Series)

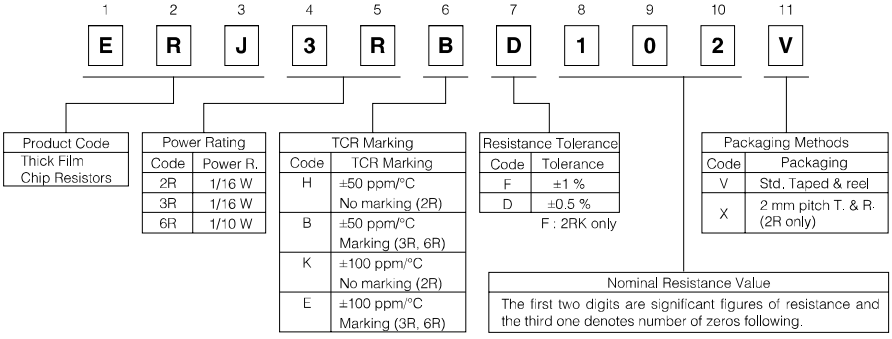

Design and Specifications are subject to change without notice. Ask factory for technical specifications before purchase and/or use.
Whenever a doubt about safety issues arises from this product, please inform us immediately for technical consultation.

■ Construction

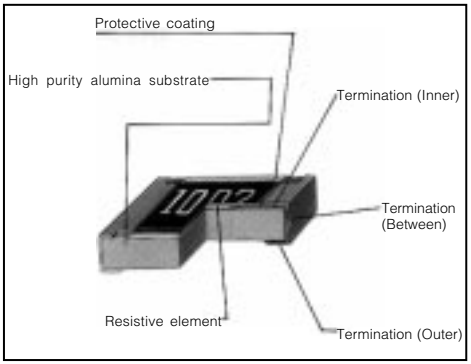

■ Dimensions in mm (not to scale)

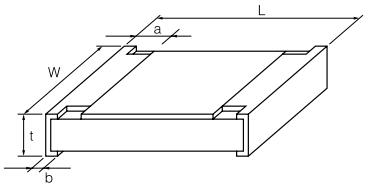

Type	Dimensions (mm)					Weight (1000 pcs.)
	L	W	a	b	t	
ERJ2R	$1.00^{\pm0.05}$	$0.50^{\pm0.05}$	$0.20^{\pm0.10}$	$0.25^{\pm0.05}$	$0.35^{\pm0.05}$	0.8 g
ERJ3R	$1.60^{\pm0.15}$	$0.80^{+0.15}_{-0.05}$	$0.30^{\pm0.20}$	$0.30^{\pm0.15}$	$0.45^{\pm0.10}$	2 g
ERJ6R	$2.00^{\pm0.20}$	$1.25^{\pm0.10}$	$0.40^{\pm0.20}$	$0.40^{\pm0.20}$	$0.60^{\pm0.10}$	4 g
ERJ3EK	$1.60^{\pm0.15}$	$0.80^{+0.15}_{-0.05}$	$0.30^{\pm0.20}$	$0.30^{\pm0.15}$	$0.45^{\pm0.10}$	2 g
ERJ6EN	$2.00^{\pm0.20}$	$1.25^{\pm0.10}$	$0.40^{\pm0.20}$	$0.40^{\pm0.20}$	$0.60^{\pm0.10}$	4 g
ERJ8EN	$3.20^{+0.05}_{-0.20}$	$1.60^{+0.05}_{-0.15}$	$0.50^{\pm0.20}$	$0.50^{\pm0.20}$	$0.60^{\pm0.10}$	10 g
ERJ14N	$3.20^{\pm0.20}$	$2.50^{\pm0.20}$	$0.50^{\pm0.20}$	$0.50^{\pm0.20}$	$0.60^{\pm0.10}$	16 g
ERJ12N	$4.50^{\pm0.20}$	$3.20^{\pm0.20}$	$0.50^{\pm0.20}$	$0.50^{\pm0.20}$	$0.60^{\pm0.10}$	27 g

■ Ratings

Type	Power Rating at 70 °C	Maximum RCWV*	Maximum Overload Voltage**	Resistance Tolerance (%)	Resistance Ranges (Ω) min.	Resistance Ranges (Ω) max.	T.C.R. (ppm/°C)	Standard Resistance Values
ERJ2R	1/16 W	50 V	100 V	±1, ±0.5	10	91	±100	E-24
					100	100 K	±50	
					110 K	1 M	±100	
ERJ3R	1/16 W	50 V	100 V	±0.5	10	91	±100	E-24
					100	100 K	±50	
					110 K	1 M	±100	
ERJ6R	1/10 W	150 V	200 V	±0.5	10	91	±100	E-24
					100	100 K	±50	
					110 K	1 M	±100	
ERJ3EK	1/16 W (1/10 W)**	50 V	100 V	±1	10	1.0 M	±100	E-24,96
ERJ6EN	1/10 W (1/8 W)**	150 V	200 V	±1	10	2.2 M	±100	E-24,96
ERJ8EN	1/8 W (1/4 W)**	200 V	400 V	±1	10	2.2 M	±100	E-24,96
ERJ14N	1/4 W	200 V	400 V	±1	10	1.0 M	±100	E-24,96
ERJ12N	1/2 W	200 V	400 V	±1	10	1.0 M	±100	E-24,96

∗ Rated Continuous Working Voltage (RCWV) shall be determined from RCWV=$\sqrt{\text{Power Rating} \times \text{Resistance Values}}$, or max. RCWV listed above, whichever less.

∗∗ Short-time Overload Test Voltage (SOTV) shall be determined from SOTV=2.5 × Power Rating or max. Overload Voltage listed above whichever less.

Power Derating Curve

For resistors operated in ambient temperatures above 70 °C, power rating shall be derated in accordance with the right figure.

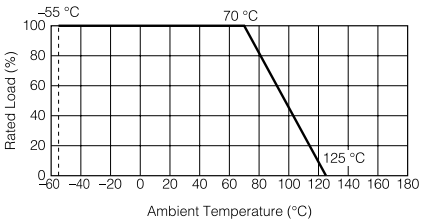

Design and Specifications are subject to change without notice. Ask factory for technical specifications before purchase and/or use.
Whenever a doubt about safety issues arises from this product, please inform us immediately for technical consultation.

■ Packaging Methods

● Standard Quantity

Type \ Thickness \ Style		Paper Taping (4 mm pitch)	Embossed Taping (4 mm pitch)	Bulk Case
ERJ2R	0.35	10000 pcs./reel(2 mm pitch)		
ERJ3R	0.45	5000 pcs./reel		
ERJ6R	0.60	5000 pcs./reel		
ERJ3EK	0.45	5000 pcs./reel		25000 pcs./case
ERJ6EN	0.60	5000 pcs./reel		10000 pcs./case
ERJ8EN	0.60	5000 pcs./reel		
ERJ14N	0.60		5000 pcs./reel	
ERJ12N	0.60		5000 pcs./reel	

● Taping Reel

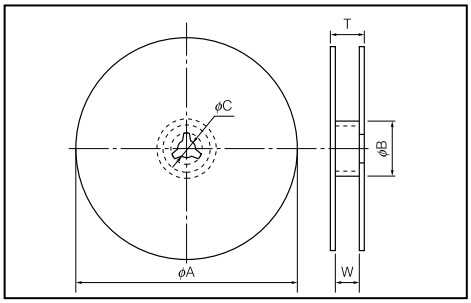

(mm) Dimensions	Type	φA	φB	φC	W	T
	3EK,6EN, 8EN,14N	$180.0^{0}_{-0.3}$	60 min.	$13.0^{\pm1.0}$	$9^{\pm1.0}$	$11.4^{\pm1.0}$
	12N				$13^{\pm1.0}$	$15.4^{\pm1.0}$

● Bulk Case

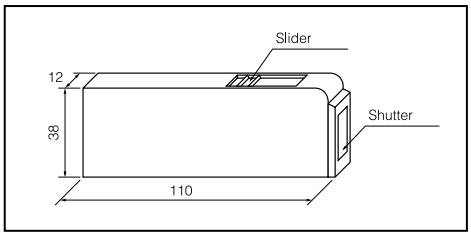

● Paper Taping

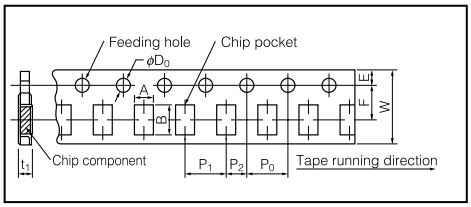

● Embossed Taping

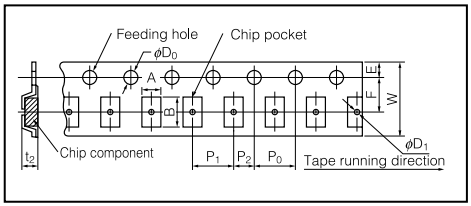

(mm) Dimensions	Type	A	B	W	F	E	P_1
	14N	$2.80^{\pm0.20}$	$3.50^{\pm0.20}$	$8.00^{\pm0.30}$	$3.50^{\pm0.05}$	$1.75^{\pm0.10}$	$4.00^{\pm0.10}$
	12N	$3.50^{\pm0.20}$	$4.80^{\pm0.20}$	$12.00^{\pm0.30}$	$5.50^{\pm0.05}$		$4.00^{\pm0.10}$

(mm) Dimensions	Type	P_2	P_0	ϕD_0	t_2	ϕD_1
	14N	$2.00^{\pm0.05}$	$4.00^{\pm0.10}$	$1.50^{+0.10}_{0}$	$1.00^{\pm0.10}$	1.00min.
	12N					1.50min.

(mm) Dimensions	Type	A	B	W	F	E	P_1	P_2	P_0	ϕD_0	t_1
	2R	$0.70^{\pm0.05}$	$1.20^{\pm0.05}$	$8.00^{\pm0.20}$	$3.50^{\pm0.05}$	$1.75^{\pm0.10}$	$4.00^{\pm0.10}$	$2.00^{\pm0.05}$	$4.00^{\pm0.10}$	$1.50^{+0.10}_{0}$	
	3R,3EK	$1.10^{\pm0.10}$	$1.90^{\pm0.05}$								$0.64^{\pm0.05}$
	6R,6EN	$1.65^{\pm0.15}$	$2.50^{\pm0.20}$								$0.84^{\pm0.05}$
	8EN	$2.00^{\pm0.15}$	$3.60^{\pm0.20}$								

⚠Cautions for Safety

Refer common precautions (ER3 page) and individual cautions (ER10 page).