Muon Magnet South

Preliminary Design

MMS assembly

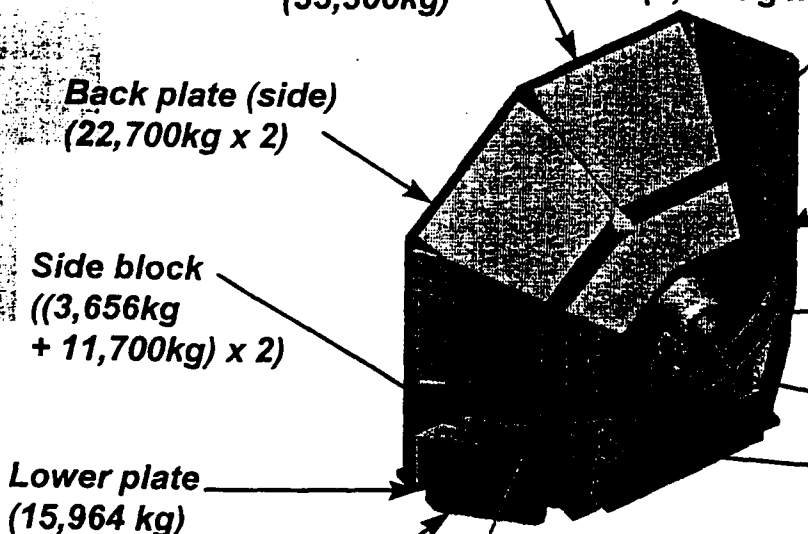

PDR Summary (MMS assembly)

Component weights

Item	Quantity	Unit weight	Total weight
Back-plate(mid)	1	33,300	33,300
Back-plate(side)	2	22,700	45,400
Donut(big)	1	6,238	6,238
Donut(small)	1	4,701	4,701
Lower-plate	1	15,964	15,964
Side block	2	3,656	7,312
Mid block	1	5,500	5,500
Lead	1	44,000	44,000
Piston	1	30,982	30,982
Lampshade panel(top)	5	3,541	17,705
Lampshade panel(bottom)	1	14,835	14,835
Teacup	1	6,091	6,091
Others (side weight and so on)	1	13,764	13,764
Coil(front)	1	554	554
Coil(rear)	1	1,281	1,281
		Total weight:	247,627 kg

CRANE LIMIT?

11-Jul-96

NOTES
UNLESS OTHERWISE SPECIFIED:

1. ALL DIMENSIONS ARE IN MILLIMETERS/INCHES.
2. DIMENSIONING AND TOLERANCING PER ANSI Y14.5M-1982.
3. SURFACE TEXTURE PER ANSI B46.1-1985. SURFACE TEXTURE SYMBOLS PER ANSI Y14.36-1978.

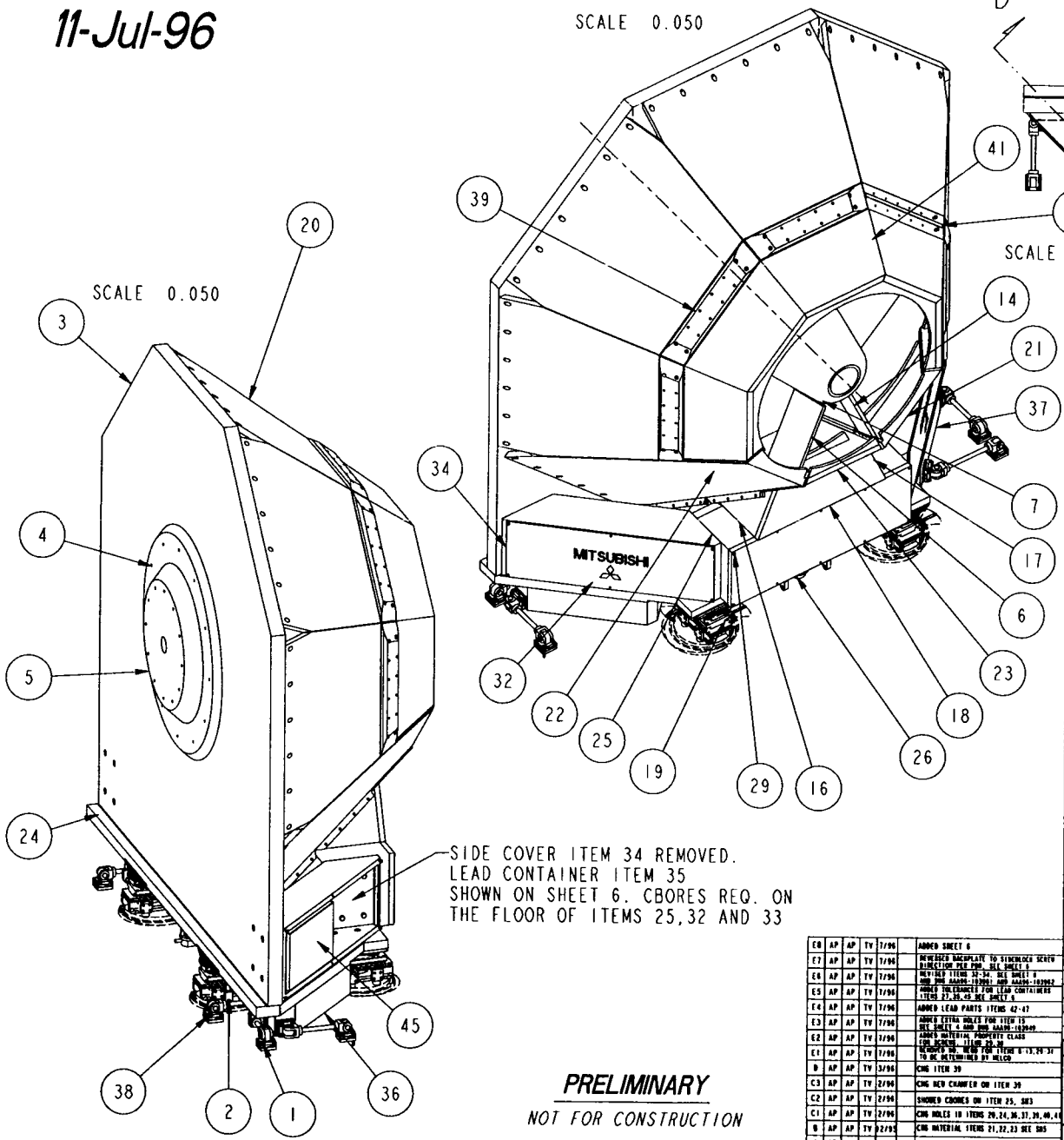

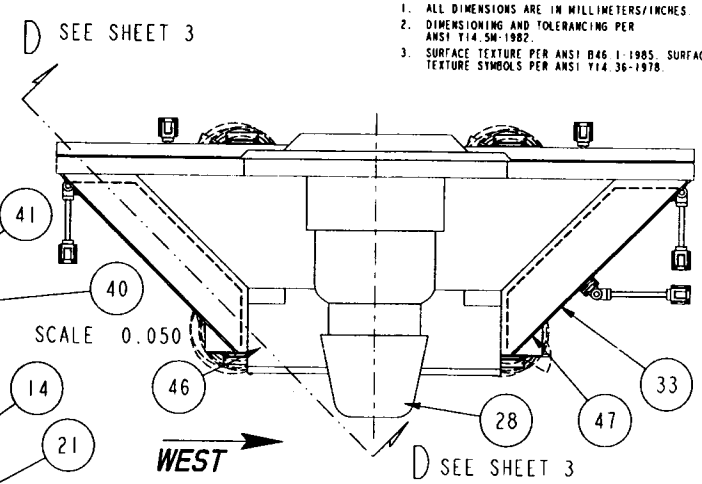

NO REQD	PART / LLNL STK NO	DESCRIPTION / MATERIAL	SPEC NO	ITEM
2	LLNL	ZZS_SIDELEAD / LEAD BRICKS - LLNL		47
1	LLNL	ZZS_MIDLEAD / LEAD BRICKS - LLNL		46
2	LLNL AAA96-XXXXXX	ZMS_SIDELEADCONTNRIN / STL 1006		45
-	BOSSARD BN 3 M6x25	ZMS_M6SOCHD25 / ALLOY STL SOCHDCAP SCR M6X25LG CLASS 8.8	DIN 912 8.8	44
3	LLNL AAA96-XXXXXX	ZMS_LEADLID2 / STL 1006		43
4	LLNL AAA96-XXXXXX	ZMS_LEADLID / ASTM A36		42
1	MMN REF 93-104173	MMS_TEACUP /		41
5	MMN REF 94-104176	MMS_TCUPSPACR / STL 1006		40
5	MMN REF 93-104175	MMS_SPLICEBAR / STL 1006		39
-	LLNL AAA96-XXXXXX TAB A/R	MMS_SM_ZTIEDOWNS / ZAXIS HORIZONTAL RESTRAINTS - LLNL		38
1	MITSUBISHI	MMS_SIDEWTWEST / STL 1006		37
1	MITSUBISHI	MMS_SIDEWTEAST / STL 1006		36
2	LLNL AAA96-XXXXXX	MMS_SIDELEADCONTNR1 / STL 1006		35
2	MITSUBISHI	MMS_SIDECOVER2 / STL 1006		34
1	MITSUBISHI	MMS_SIDEBLOCK10B / STL 1006		33
1	MITSUBISHI	MMS_SIDEBLOCK10A / STL 1006		32
-	MITSUBISHI SPEC	MMS_SCRWASHERM36 / STL. ZINC PLATE M36 WASHER		31
-	MITSUBISHI SPEC.	MMS_SCRM36 / ALLOY STL SOCHD CAP SCR M36 CLASS 10.9	DIN 912 10.9	30
-	MITSUBISHI SPEC.	MMS_SCRM24 / ALLOY STL SOCHD CAP SCR M24 CLASS 10.9	DIN 912 10.9	29
1	MMN REF 93-101860	MMS_PISTON / STL 1006		28
3	LLNL AAA96-XXXXXX	MMS_MLEADCONTR2 / STL 1006		27
1	MITSUBISHI	MMS_MIDCOVR10 / STL 1006		26
1	MITSUBISHI	MMS_MIDBLOCK10 / STL 1006		25
1	MITSUBISHI	MMS_LOWPLATE9A / STL 1006		24
1	MMN REF 93-101893	MMS_LAMPLOWPAN4 / STL 1006 - SST 304L		23
1	MMN REF 93-101891	MMS_LAMPLOWPAN3M / STL 1006 - SST 304L		22
1	MMN REF 93-101891	MMS_LAMPLOWPAN3 / STL 1006 - SST 304L		21
5	MMN REF 93-101890	MMS_LAMP2PAN / STL 1006		20
4	NILMAN 200-XTDMC-96031	MMS_NILASN7 / STL ASTM A36 OR EQUIV		19
1	MITSUBISHI	MMS_GUSPLATE10 / STL 1006		18
1	MITSUBISHI	MMS_GUS10B / STL 1006		17
1	MITSUBISHI	MMS_GUS10A / STL 1006		16
2	LLNL AAA96-XXXXXX	MMS_FLATJACKASM2 / RSM-1500 ENERPAC HYDRAULIC CYLINDER		15
1	MMN REF 93-104157	MMS_FINWEST / SST 310		14
-	MITSUBISHI SPEC.	MMS_FINSTUD / SST .751N OR M20 STUD X 89mm		13
-	MITSUBISHI SPEC	MMS_FINSPHERWASH / STL SPHER WASH. .251D x 50.8ID x 12.7THK		12
-	MITSUBISHI SPEC	MMS_FINM24WASHER / STL. ZINC PLATE		11
-	MITSUBISHI SPEC.	MMS_FINM24SCR / STL. M24 HEX HD SCR x 100mm		10
-	MITSUBISHI SPEC.	MMS_FINM24NUT / STL M24 NUT		9
-	MITSUBISHI SPEC.	MMS_FINM20NUT / SST .751N OR M20 NUT		8
14	CARR LANE CL-12-LF-S	MMS_FINLEVEL / SST LEVELING FOOT		7
1	MMN REF 93-104157	MMS_FINEAST / SST 310		6
1	MMN REF 93-101864	MMS_DONUTSN / STL 1006		5
1	MMN REF 93-101864	MMS_DONUTBIG / STL 1006		4
1	MMN REF 93-101886	MMS_BACPLATE / STL 1006		3
18	LLNL AAA96-XXXXXX	AAY_RESTRAINT2 / YAXIS VERTICAL RESTRAINTS - LLNL		2
-	LLNL AAA96-XXXXXX TAB A/R	AAA_TIEDOWNS_X2 / XAXIS HORIZONTAL RESTRAINTS - LLNL		1

LTR	DWN	CHK	APVD	DATE	CHANGE
E8	AP	AP	TV	7/96	ADDED SHEET 6
E7	AP	AP	TV	7/96	REVISED BACKPLATE TO SINCLOCK SCREW DIRECTION PER PMM. SEE SHEET 1
E6	AP	AP	TV	7/96	REVISED ITEMS 32-34. SEE SHEET 6 ADD PMS AAA95-103961 ADD AAA95-103962
E5	AP	AP	TV	7/96	ADDED TOLERANCES FOR LEAD CONTAINERS ITEMS 27,28,43 SEE SHEET 6
E4	AP	AP	TV	7/96	ADDED LEAD PARTS ITEMS 42-47
E3	AP	AP	TV	7/96	ADDED EXTRA HOLES FOR ITEM 15 SEE SHEET 4 ADD PMS AAA95-103949
E2	AP	AP	TV	7/96	ADDED MATERIAL PROPERTY CLASS FOR BOLTS. ITEMS 22-30
E1	AP	AP	TV	7/96	REMOVED PL. HEAD FOR ITEMS 8,13,29-31 TO BE DETERMINED BY MELCO
D	AP	AP	TV	3/96	CHG ITEM 39
C3	AP	AP	TV	2/96	CHG NEW CHAMFER ON ITEM 39
C2	AP	AP	TV	2/96	SHOWED CBORES ON ITEM 25, SH3
C1	AP	AP	TV	2/96	CHG HOLES ID ITEMS 20,24,36,37,39,40,41
B	AP	AP	TV	12/95	CHG MATERIAL ITEMS 21,22,23 SEE SH5
A	AP	AP	TV	11/95	CHANGED ITEMS 25,26,28,32-35

DWN POBLY 11/95
CHK VENCELLI 11/95
APVD TANAMOTO 11/95
CLASSIFIED BY:
TITLE
DATE

LAWRENCE LIVERMORE NATIONAL LABORATORY
MECHANICAL ENGINEERING DEPT
UNIVERSITY OF CALIFORNIA

CLASSIFICATION

MAJOR UNIT: RELATIVISTIC HEAVY ION COLLIDER
SUBASSY: PHENIX MUON MAGNET SOUTH
DETAIL: MUON PISTON MAGNET SOUTH INSTALLATION
DRAWING NO: AAA95-104779-0E
SCALE NO: N/A
SHEET 1 OF 5

PRELIMINARY
NOT FOR CONSTRUCTION

PHENIX – MUON MAGNET SOUTH
PDR

5–1–96

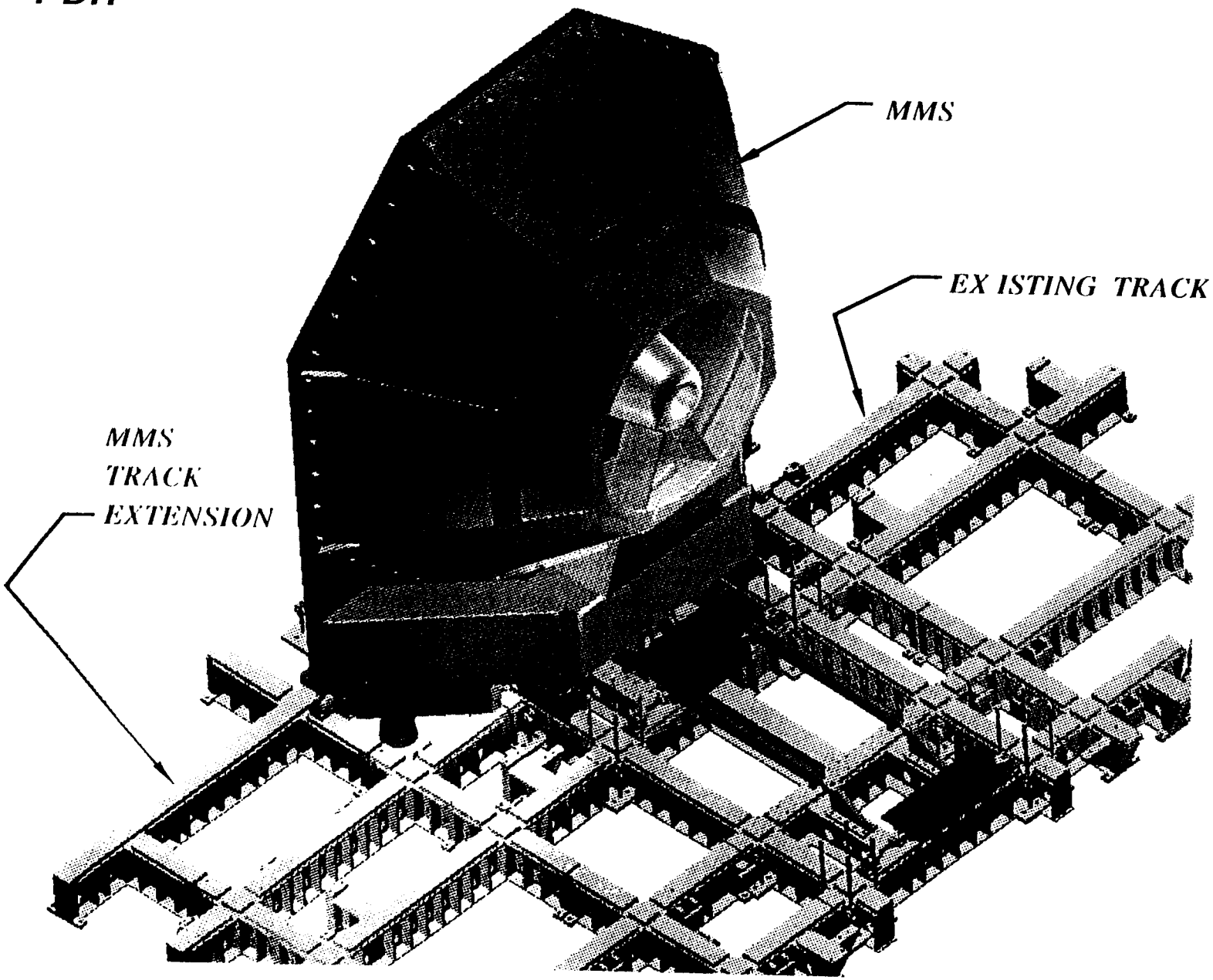

1) Lower-plate installation

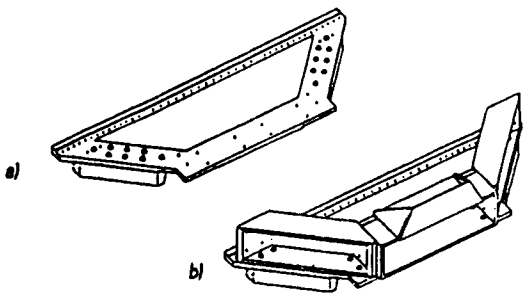

2) Back-plate erection

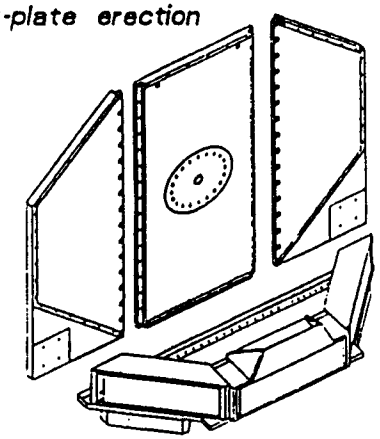

3) Bottom lampshade mount

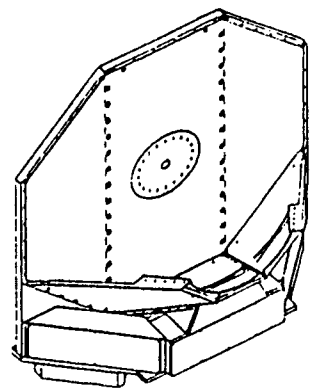

4) Piston and fin added

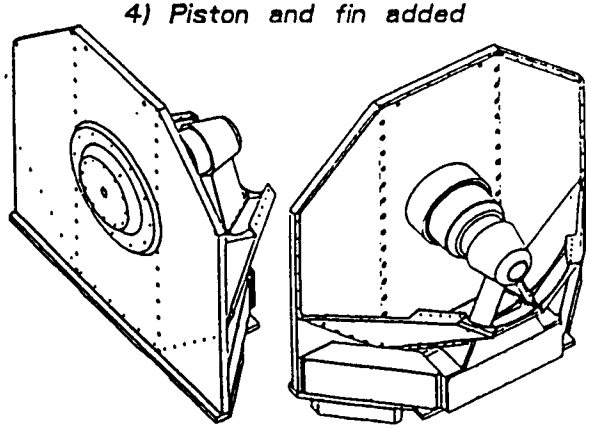

5)Teacup and top lampshade added

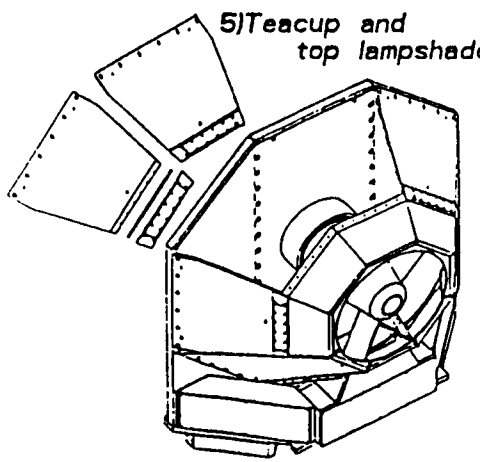

6) Complete MMS system

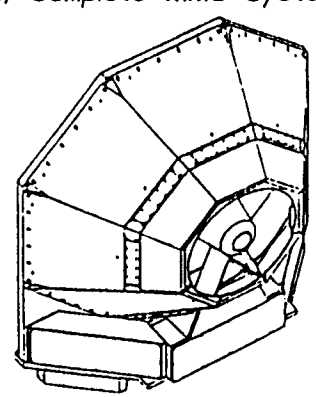

Assembly flow

25-Apr-96

ASM.PROCESS

Component weights

Item	Quantity	Unit weight	Total weight
Back-plate(mid)	1	33,300	33,300
Back-plate(side)	2	22,700	45,400
Donut(big)	1	6,238	6,238
Donut(small)	1	4,701	4,701
Lower-plate	1	15,964	15,964
Side block	2	3,656	7,312
Mid block	1	5,500	5,500
Lead	1	~~100,000~~ 44	~~100,000~~ 44
Piston	1	30,982	30,982
Lampshade panel(top)	5	3,541	17,705
Lampshade panel(bottom)	1	14,835	14,835
Teacup	1	6,091	6,091
Others (side weight and so on)	1	13,764	13,764
Coil(front)	1	554	554
Coil(rear)	1	1,281	1,281
		Total weight:	~~303~~ 247,627 kg

side 13 × 2 } 49 US ton
mid 23

44 metric ton

MITSUBISHI ELECTRIC CORPORATION

Design parameters

Item	Design Value		
	Front Coil	Rear Coil	
		Inner Coil	Outer Coil
AT	131100 AT	135700 AT	126500 AT
Current	2300 A	2300 A	2300 A
Number of Turns	57 turn/coil	59 turn/coil	55 turn/coil
Inner Diameter	ϕ1413.0 mm	ϕ1617.0 mm	———
Outer Diameter	ϕ1499.4 mm	———	ϕ1787.4 mm
Coil Length	586 mm	606 mm	567 mm
Conductor Cross Section	18.5 x 18.5 - ϕ11.5	18.5 x 18.5 - ϕ11.5	18.5 x 18.5 - ϕ11.5
Conductor Material	Oxygen Free Copper	Oxygen Free Copper	Oxygen Free Copper
Resistance (at 20 deg C)	19.0 mΩ	22.4 mΩ	22.0 mΩ
Operating Voltage	44.4 V	52.6 V	51.5 V
Operating Joule Loss	102.1kW	121.0 kW	118.5 kW
No. of Water Circuits	8	8	8
Water Flow Rate	178.6l/min	167.4 l/min	163.9 l/min
Water Temperature Rise	8.1 deg C	10.2 deg C	10.2 deg C

MITSUBISHI ELECTRIC CORPORATION

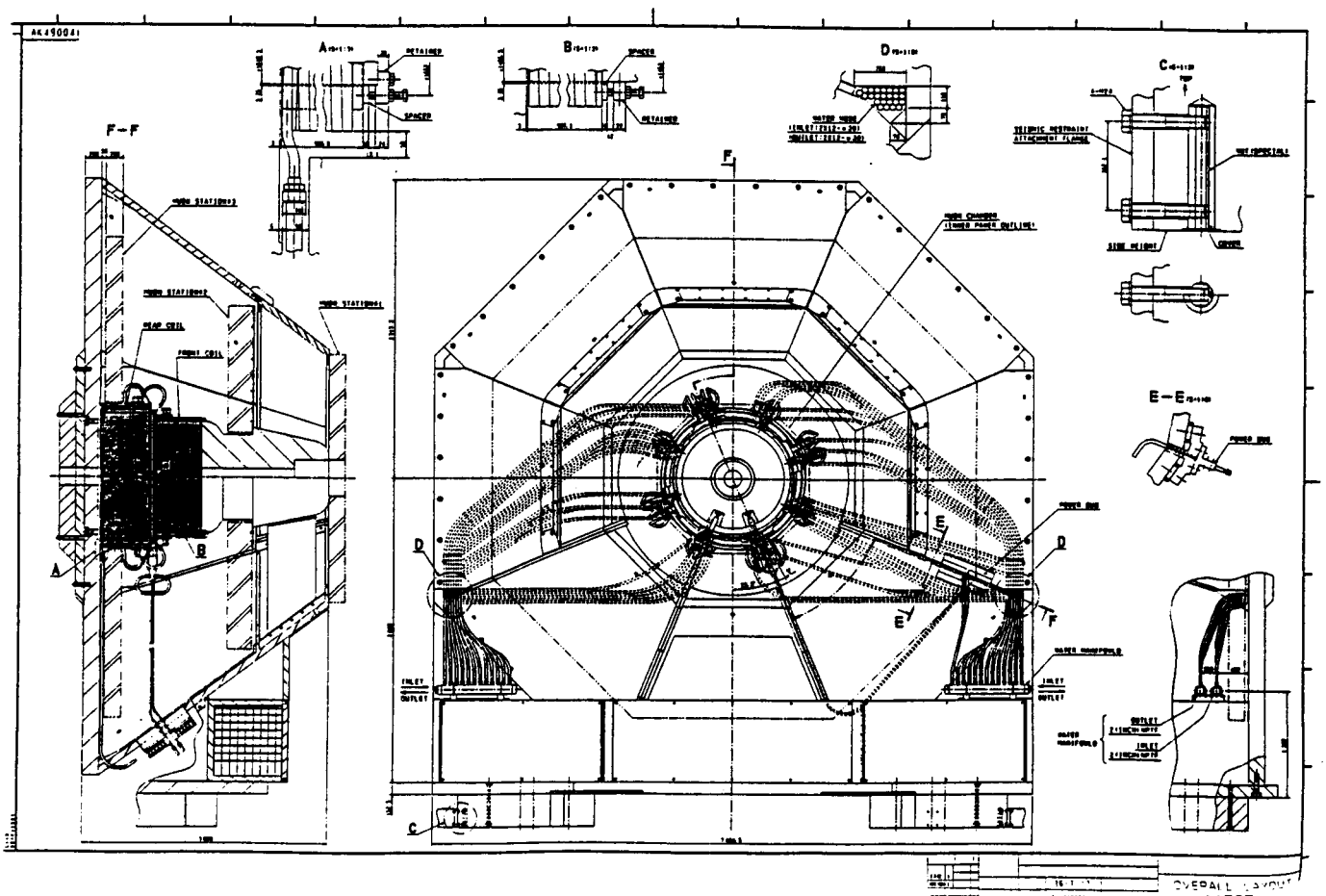

PHENIX Muon Magnet South - Coil Parameters

	Front Coil	Rear Coil
Amp-Turns	133,339	253,024
Configuration	2 Layer Solenoid	4 Layer Solenoid
	Quadrafilar - Copper	Quadrafilar - Copper
Inside Radius (mm)	703.3	805.28
Outside Radius (mm)	765	892.74
# of Turns	57	114
Cond Size (mm)	18.47 square	18.47 square
Cond Hole ø (mm)	11.53	11.53
Current (amps)	2300	2300
Voltage (volts)	44.8	104
Power (kwatts)	103	239.2
Flow rate per circuit (gpm)	5.99	5.52
Flow rate total (gpm)	47.9	88.3
Water Flow Velocity (ft/sec)	11.9	10.9
Weight (kg)	554	1281
Outlet Water Temp °C	28.1	30.2

RMY-01
4/26/96

Coil parameters (Spec.)

Item	Front Coil	Rear Coil
AT	133,339 AT	253,024 AT
Current	2,300 A	2,300 A
Number of Turns	57 turn/coil	114 turn/coil
Inner Diameter	ϕ1,406.6 mm	ϕ1,610.6 mm
Outer Diameter	ϕ1,530.0 mm	ϕ1,785.5 mm
Coil Length	586 mm	606 mm
Conductor Cross Section	~~18.5 x 18.5~~ 18.47² -ϕ11.5	~~18.5 x 18.5~~ 18.47² -ϕ11.5
Conductor Material	Oxygen Free Copper	Oxygen Free Copper
Resistance (at 20 deg C)	19.2 mΩ	44.3 mΩ
Voltage	44.8 V	104.0 V
Joule Loss	101.4 kW	234.5 kW
No. of Water Circuits	8	16
Water Flow Rate	~~181.3 l/min~~	~~334.3 l/min~~
Water Temperature Rise	8.1 deg C	10.2 deg C