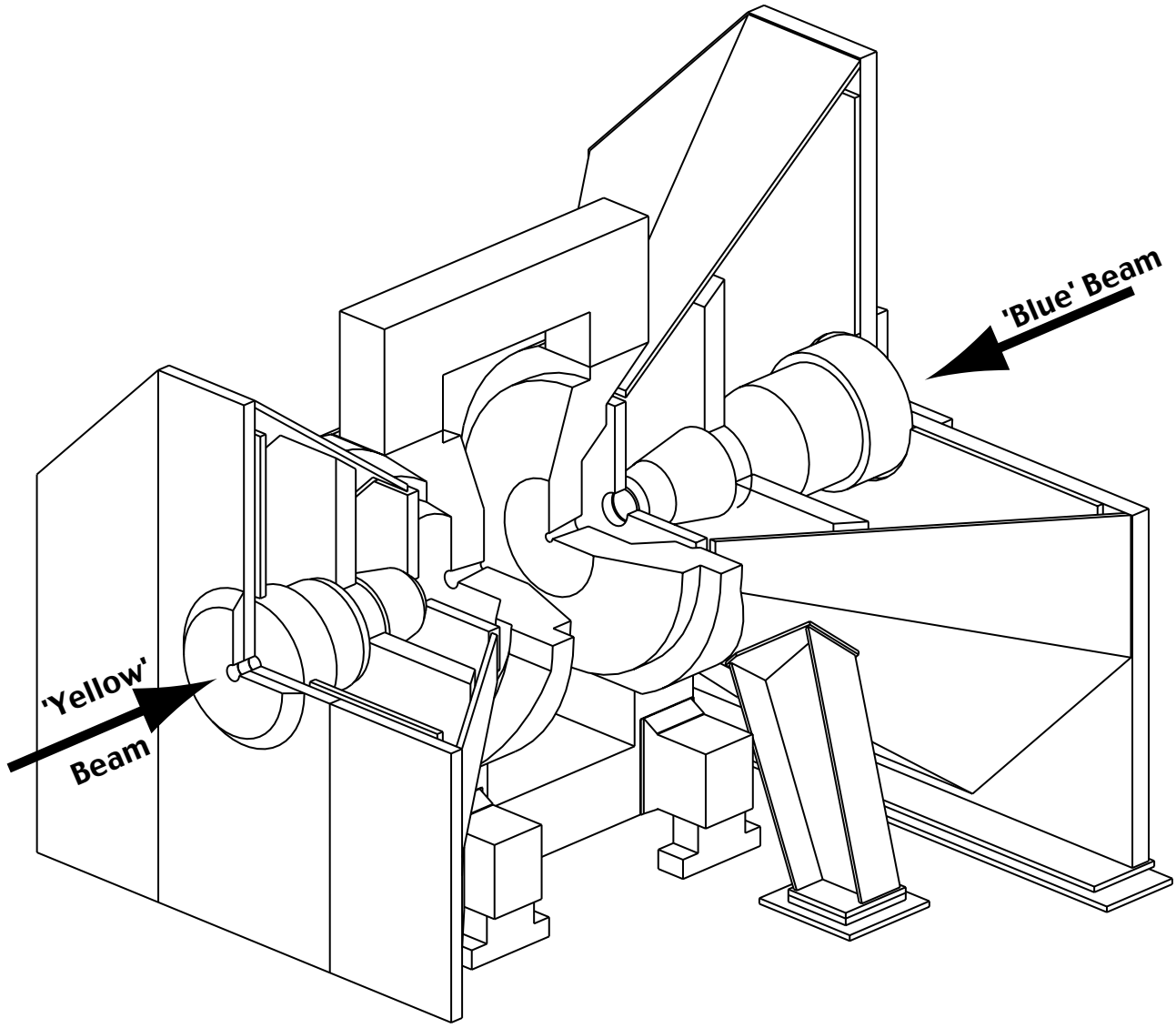
'Blue' Beam
'Yellow'
Beam