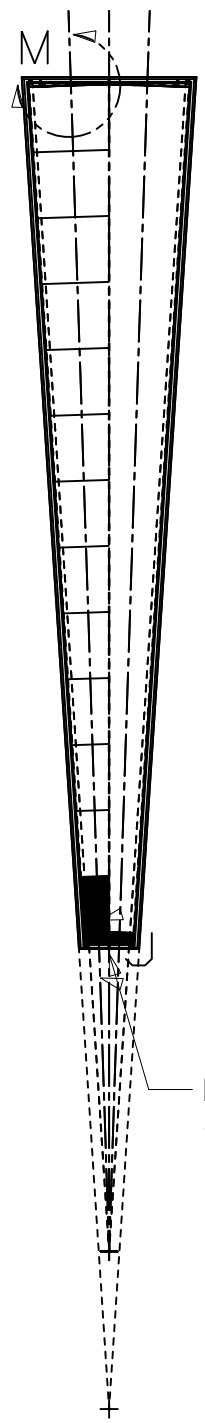

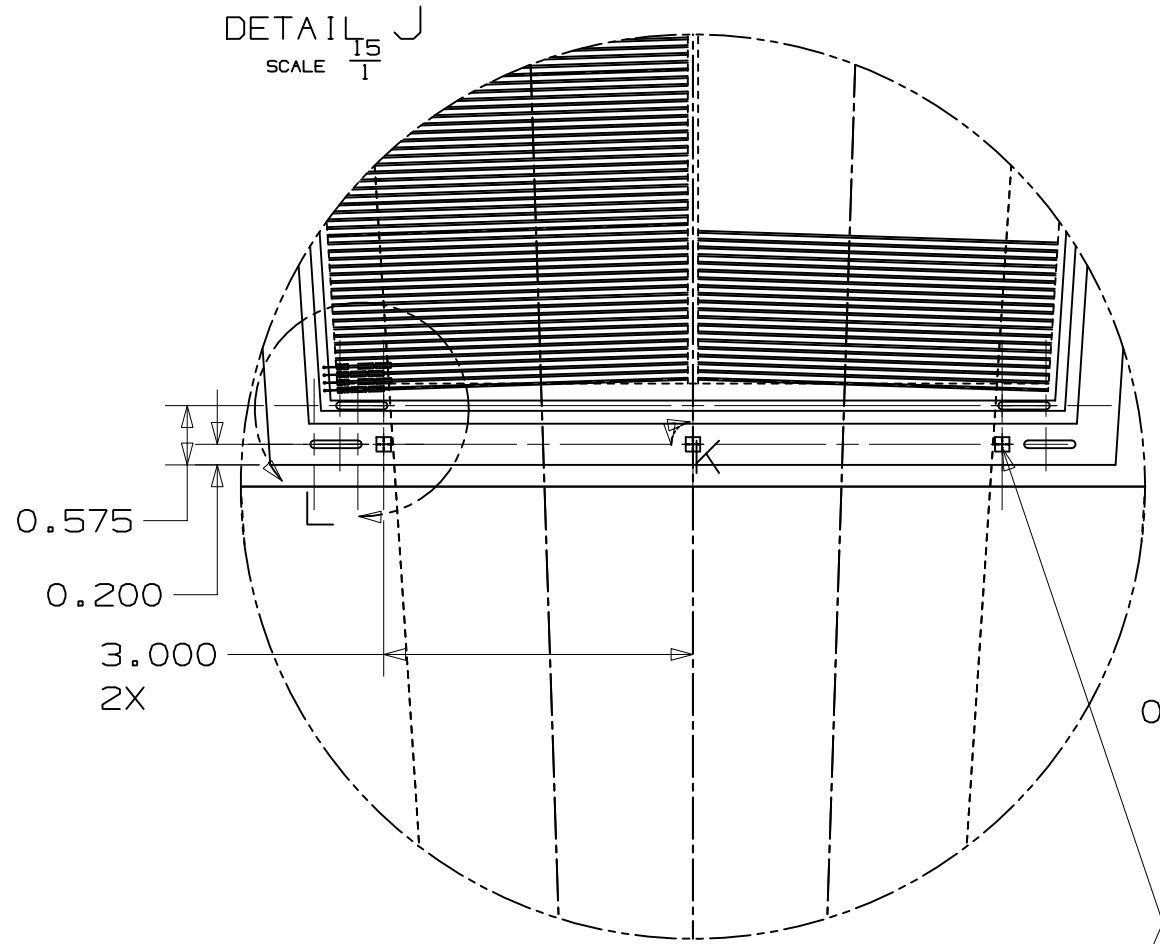

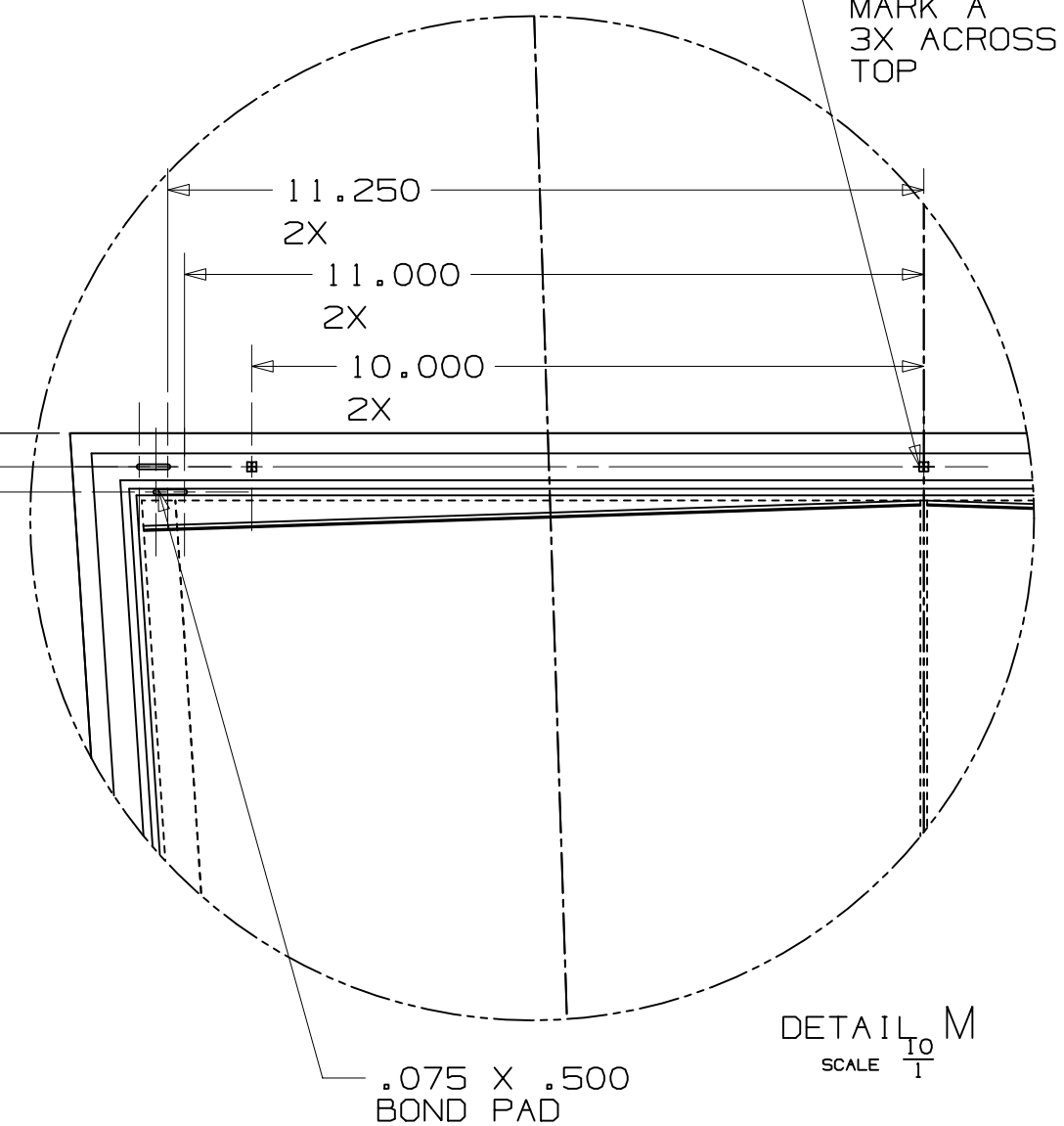

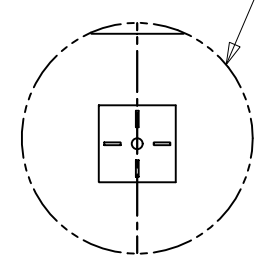

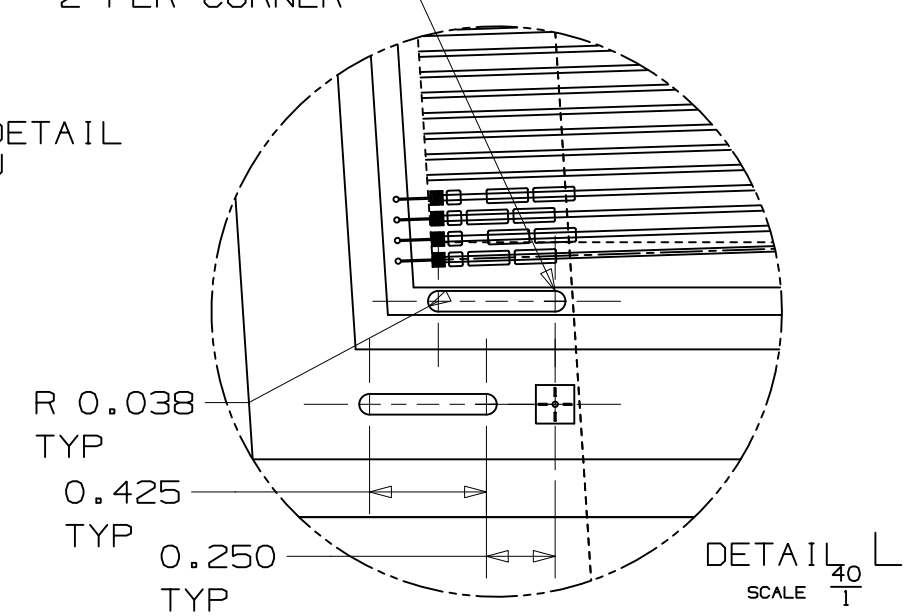

ITEM NUMBER	NUMBER REQD	DESCRIPTION

ALL DIMENSION IN MILLIMETERS

REV	CLASS REVIEW	REVISIONS	DATE	CHANGED BY	CHECKED BY	APPROVED BY
—		ORIGINAL ISSUE	—	—	—	—

CLASSIFICATION:
DRAWING: PART: TITLE BLOCK:

	SIGNATURE	DATE	GROUP
ORIG	JON K	6/08	P-25
DRAWN	WALT	6/08	P-25
CHECKED			
PROJ ENGR			
APPROVED			
RELEASED			

LOS ALAMOS
LOS ALAMOS NATIONAL LABORATORY
LOS ALAMOS, NEW MEXICO, 87545

TOLERANCE-(UNLESS OTHERWISE NOTED)
X=± ____ 0.XX =± .03 ANG=± .25
.X=± ____ 0.XXX=± .010 FIN= ____

TITLE
FVTX DETECTOR
LARGE SENSOR
WEDGE"B"

SCALE	TOTAL SHEETS	DRAWING NO.	SIZE	NO.
		126Y-267964	B	4