ITEM NUMBER	NUMBER REQD	DESCRIPTION

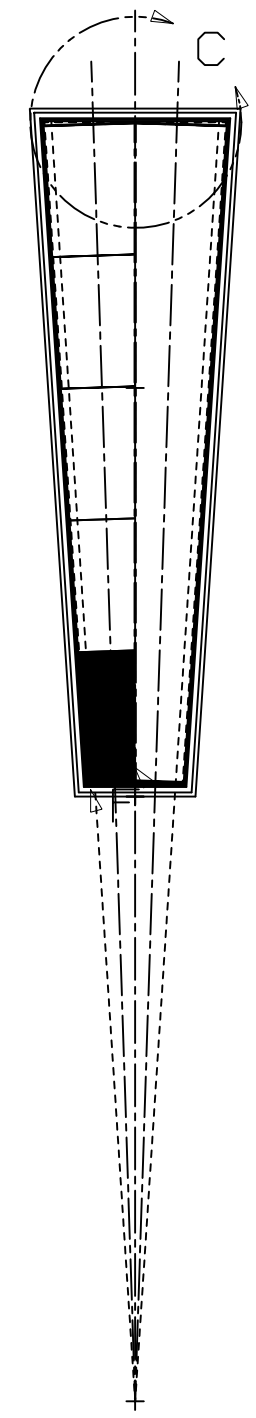

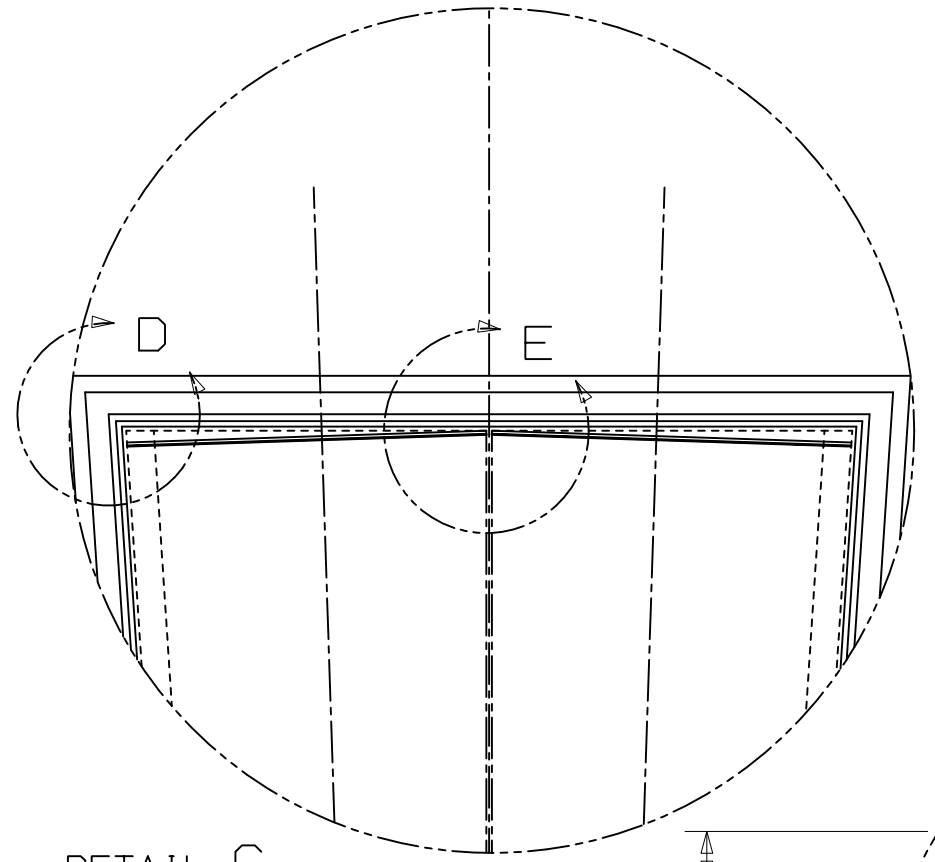

DETAIL C
SCALE 8/1

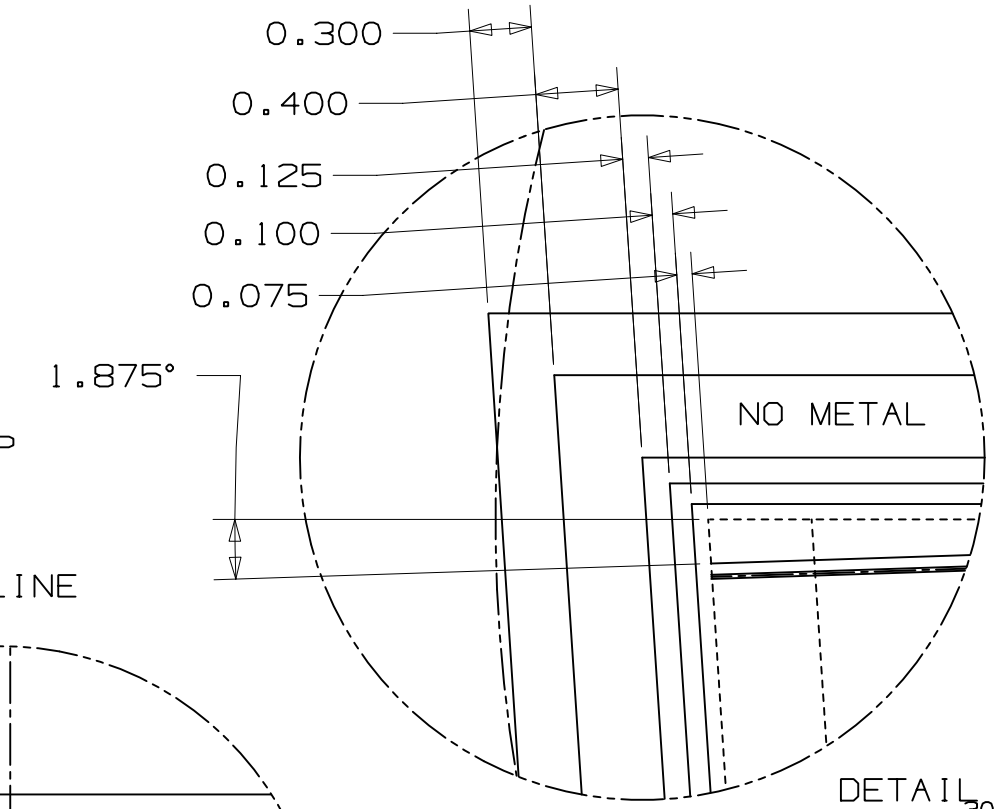

DETAIL D
SCALE 30/1

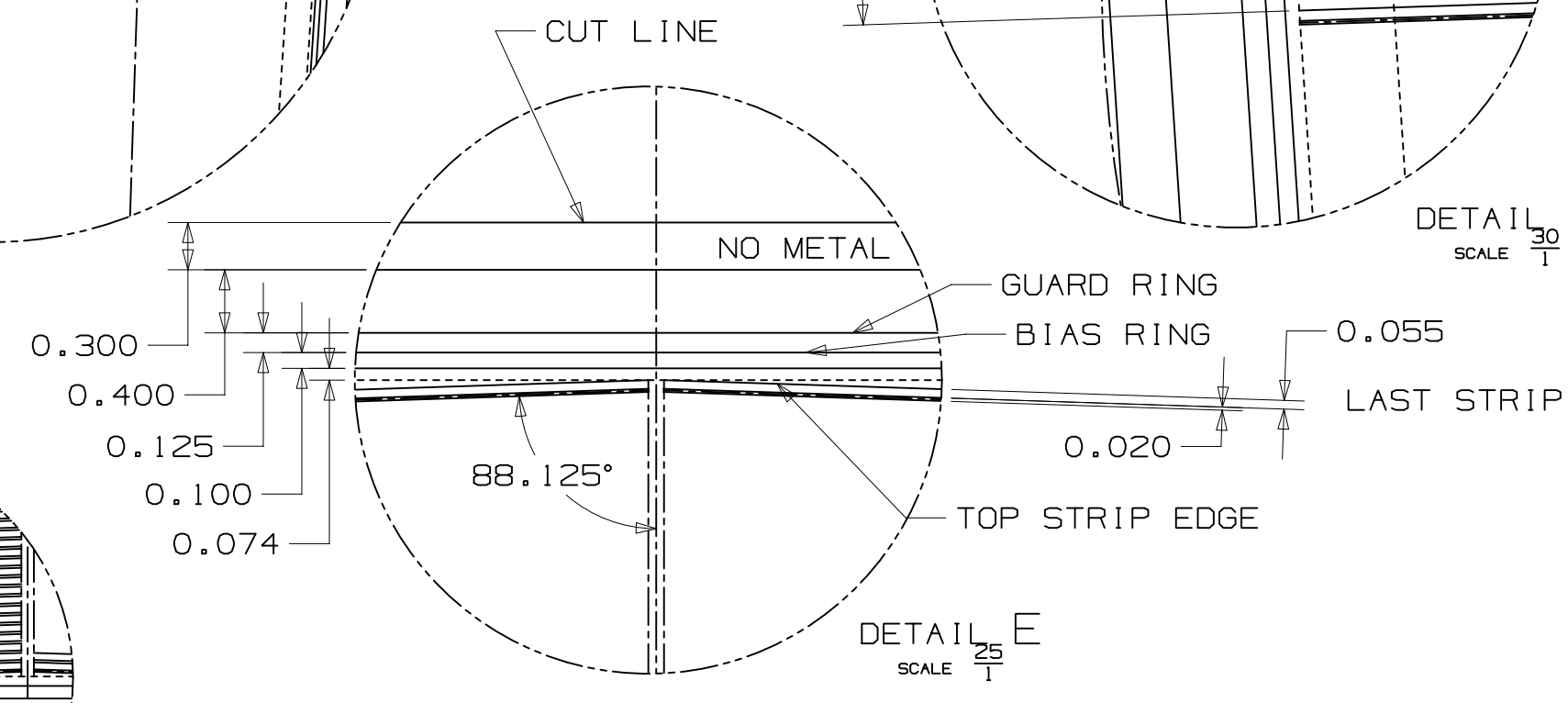

DETAIL E
SCALE 25/1

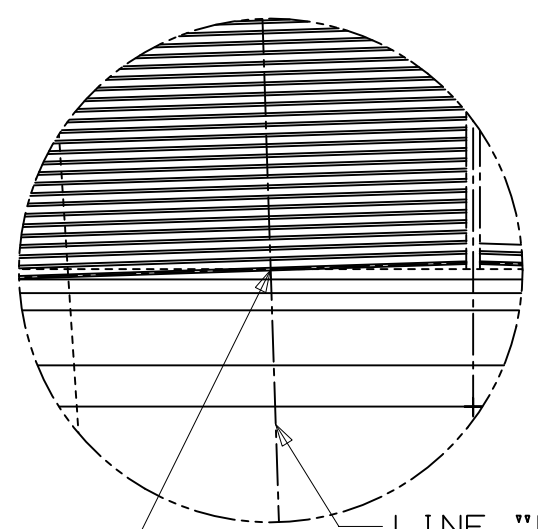

DETAIL F
SCALE 20/1

CLASSIFICATION:
DRAWING: PART: TITLE BLOCK:

	SIGNATURE	DATE	GROUP
ORIG	D LEE	5/08	P-25
DRAWN	WALT	5/08	P-25
CHECKED			
PROJ ENGR			
APPROVED			
RELEASED			

REV	CLASS REVIEW	REVISIONS	DATE	CHANGED BY	CHECKED BY	APPROVED BY
—		ORIGINAL ISSUE	—	—	—	—

LOS ALAMOS
LOS ALAMOS NATIONAL LABORATORY
LOS ALAMOS, NEW MEXICO, 87545

TOLERANCE-(UNLESS OTHERWISE NOTED)
X=± ____ 0.XX =± .03 ANG=± .25
.X=± ____ 0.XXX=± .010 FIN= ____

TITLE
FVTX DETECTOR
SMALL SENSOR
WEDGE "A"

SCALE	TOTAL SHEETS	DRAWING NO.	SIZE	NO.
		126Y-267964	B	7