ITEM NUMBER	NUMBER REQD	DESCRIPTION

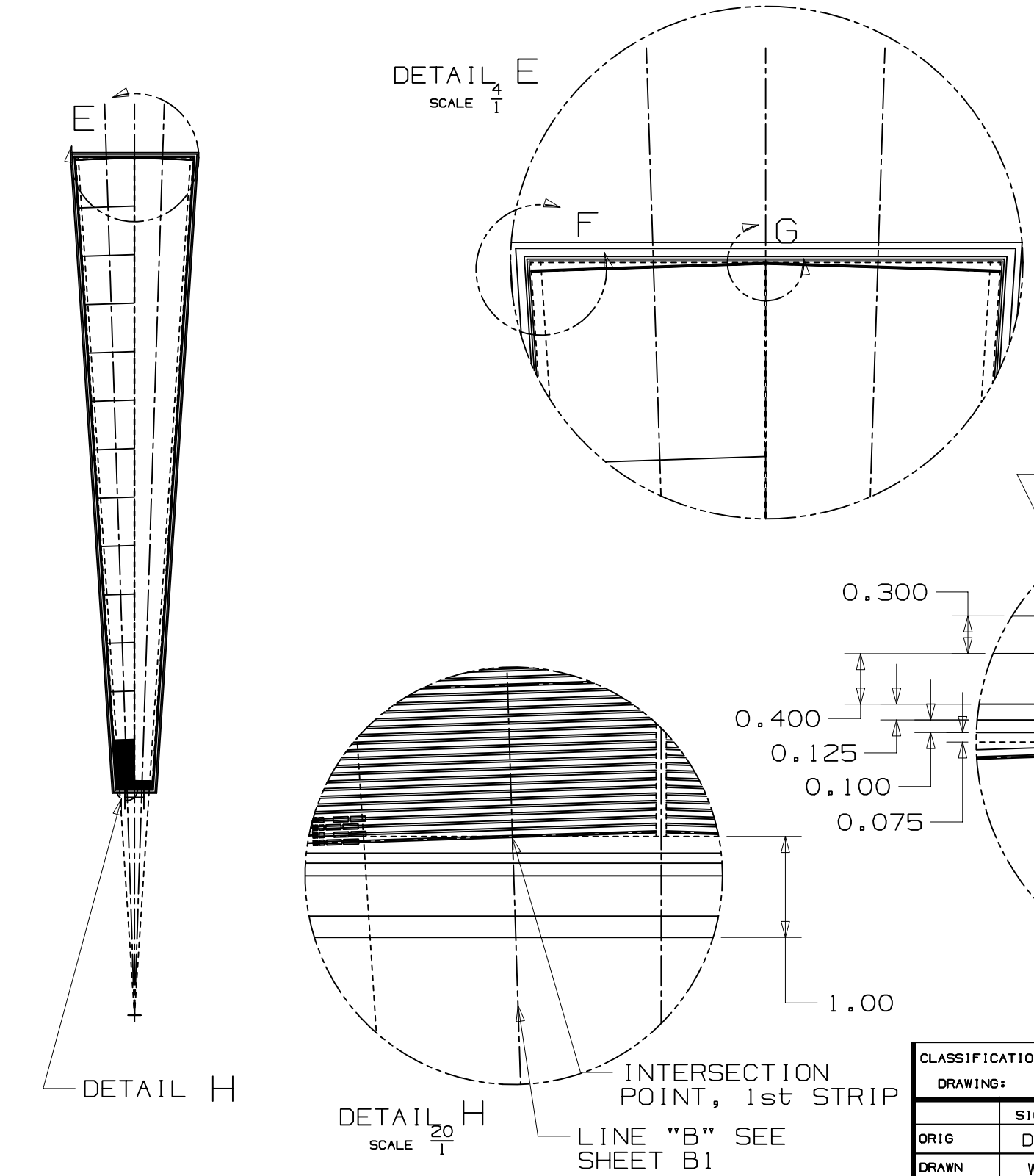

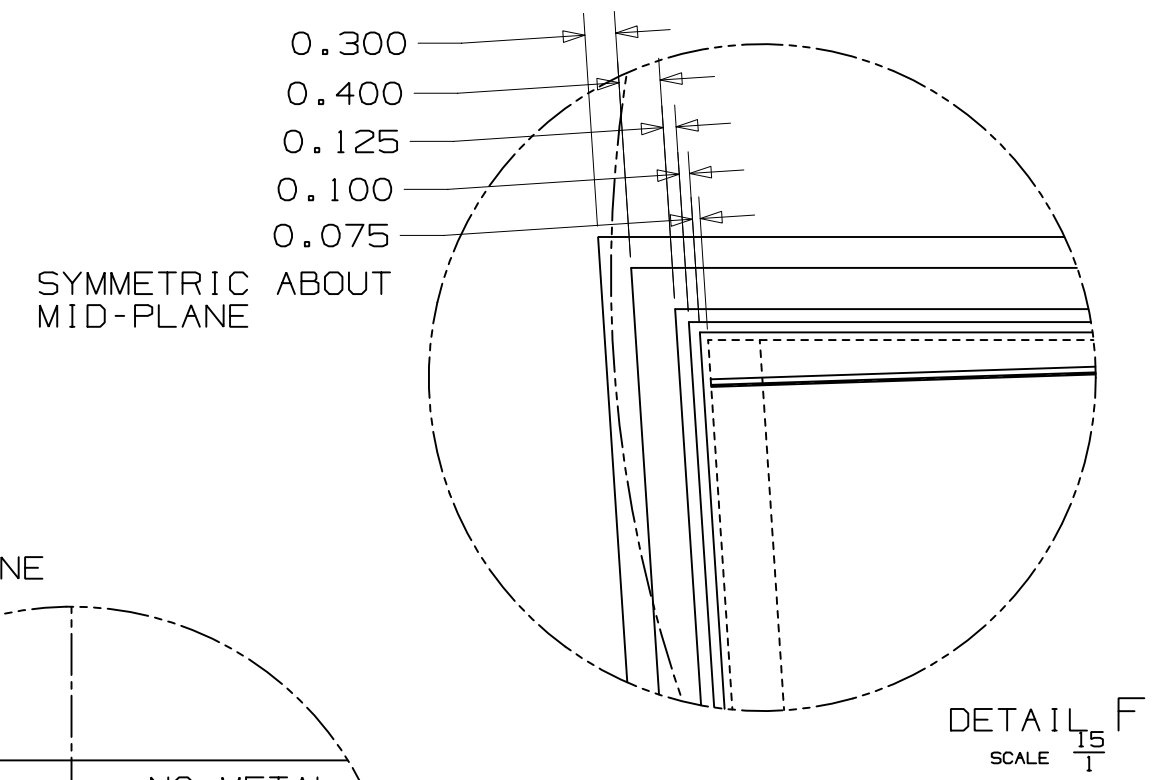

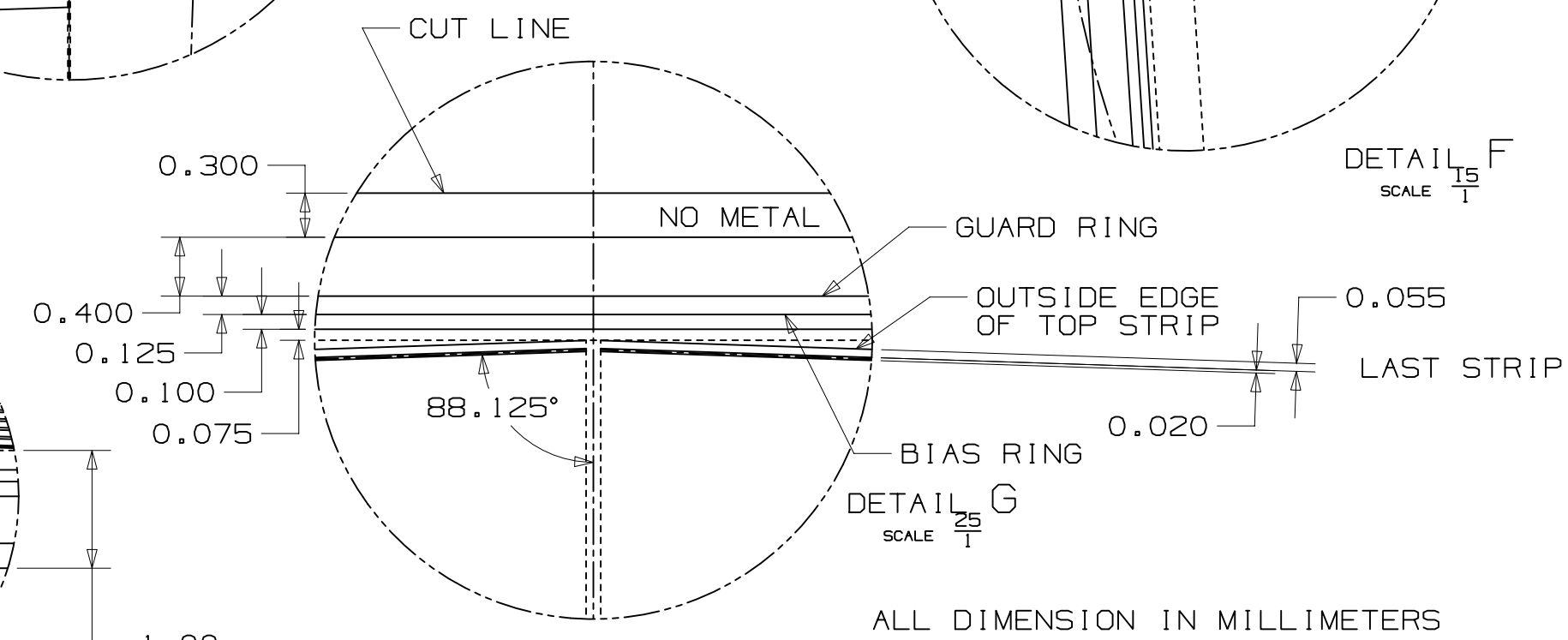

ALL DIMENSION IN MILLIMETERS

WEDGE "B" DETECTOR 13 FPHX CHIPS ON EACH SIDE, 128 CHANNELS PER CHIP, 3328 OUTPUTS PER WEDGE

CLASSIFICATION:
DRAWING: PART: TITLE BLOCK:

	SIGNATURE	DATE	GROUP
ORIG	D LEE	5/08	P-25
DRAWN	WALT	5/08	P-25
CHECKED			
PROJ ENGR			
APPROVED			
RELEASED			

REV	CLASS REVIEW	REVISIONS	DATE	CHANGED BY	CHECKED BY	APPROVED BY
A		CLARIFICATION ON TOP STRIP	6/08	WALT		
—		ORIGINAL ISSUE	—	—	—	—

LOS ALAMOS
LOS ALAMOS NATIONAL LABORATORY
LOS ALAMOS, NEW MEXICO, 87545

TOLERANCE-(UNLESS OTHERWISE NOTED)
X=± 0.XX =± .03 ANG=±
.X=± 0.XXX=± .010 FIN=

TITLE
FVTX DETECTOR
LARGE SENSOR
WEDGE"B"

SCALE	TOTAL SHEETS	DRAWING NO.	SIZE	NO.
		126Y-267964	B	3