# PHENIX Level 2 Ttrigger system

**PHENIX Focus Seminar**
**Jan 27, 2004**

**Tony Frawley**
**Florida State University**

# Main Contributors

S.S. Adler[a], S. Belikov[f], M. Bjorndal[c], M. Chiu[c], C.R. Cleven[e], B.A. Cole[c], K.K. Das[d], E.J. Desmond[a], J.E. Frantz[c], A.D. Frawley[d], X. He[e], S. Kelly[b], G.C. Mishra[e], J.L. Nagle[b], C. Pinkenburg[a], M.L. Purschke[a], H. Qu[e]

a. Brookhaven National Laboratory, Upton, NY 11973-5000, USA
b. University of Colorado, Boulder, CO 80309, USA
c. Columbia University, New York, NY 10027, USA
d. Florida State University, Tallahassee, FL 32306, USA
e. Georgia State University, Atlanta, GA 30303, USA
f. Iowa State University, Ames, IA 50011, USA

# Why do we need triggers?

| Species | Collision rate (KHz) | Event size (KB) | Data volume (MB/s) | Rate to disk (MB/s) |
|---|---|---|---|---|
| AuAu | < 14 | 250 | < 3,500 | 300 |
| pp | < 8000 | 90 | < 720,000 | 300 |

We reduce the data volume to 300 MB/s by using **level 1** and **level 2** triggers to select those events that are likely to contain the physics that we want, and discarding events that do not seem to be interesting. We also write **as much minimum bias data as possible** to get the physics that we cannot trigger on.

In AuAu running, we do not presently have level 1 triggers which provide

# PHENIX Online System

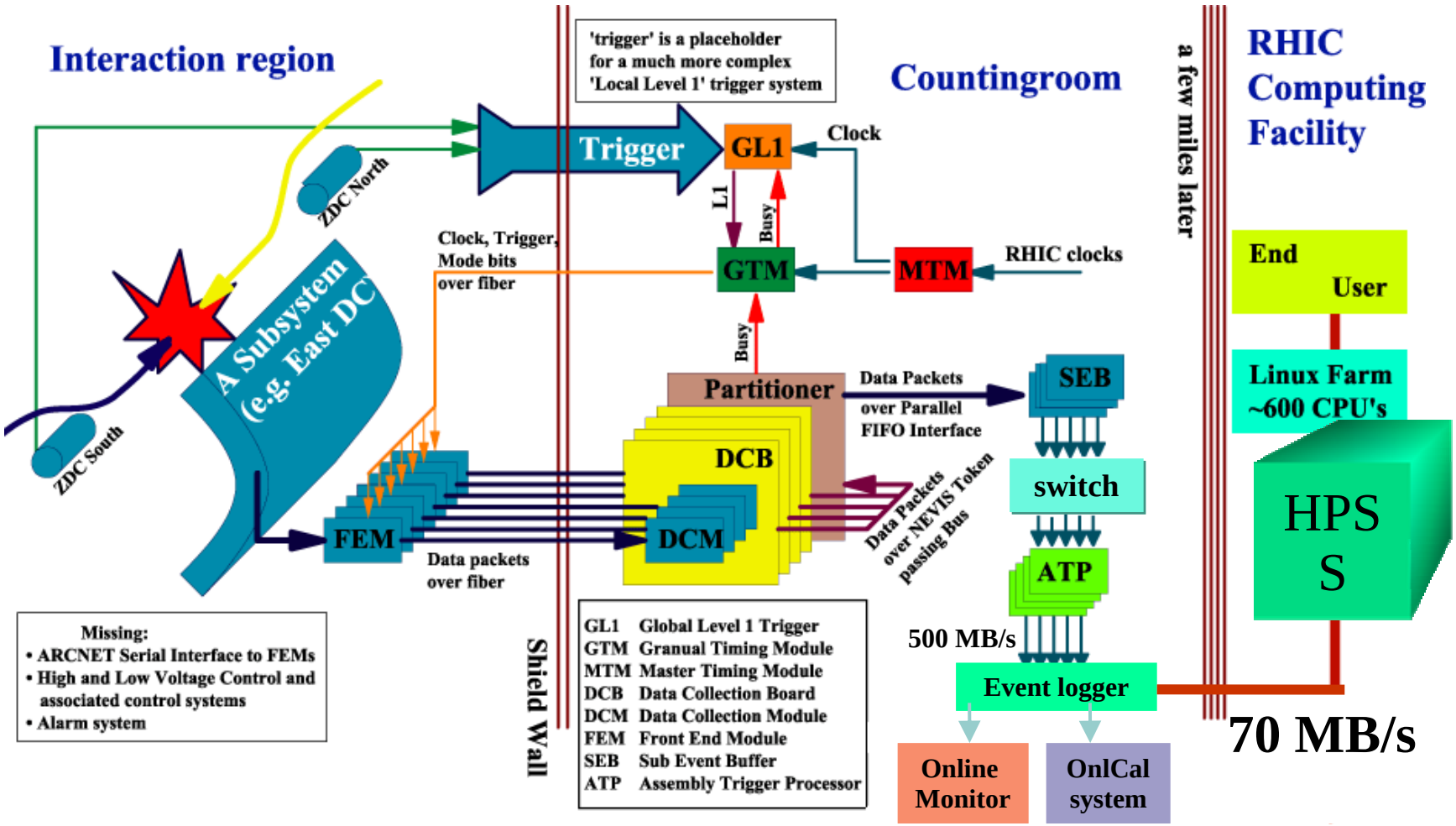

# PHENIX Event Builder

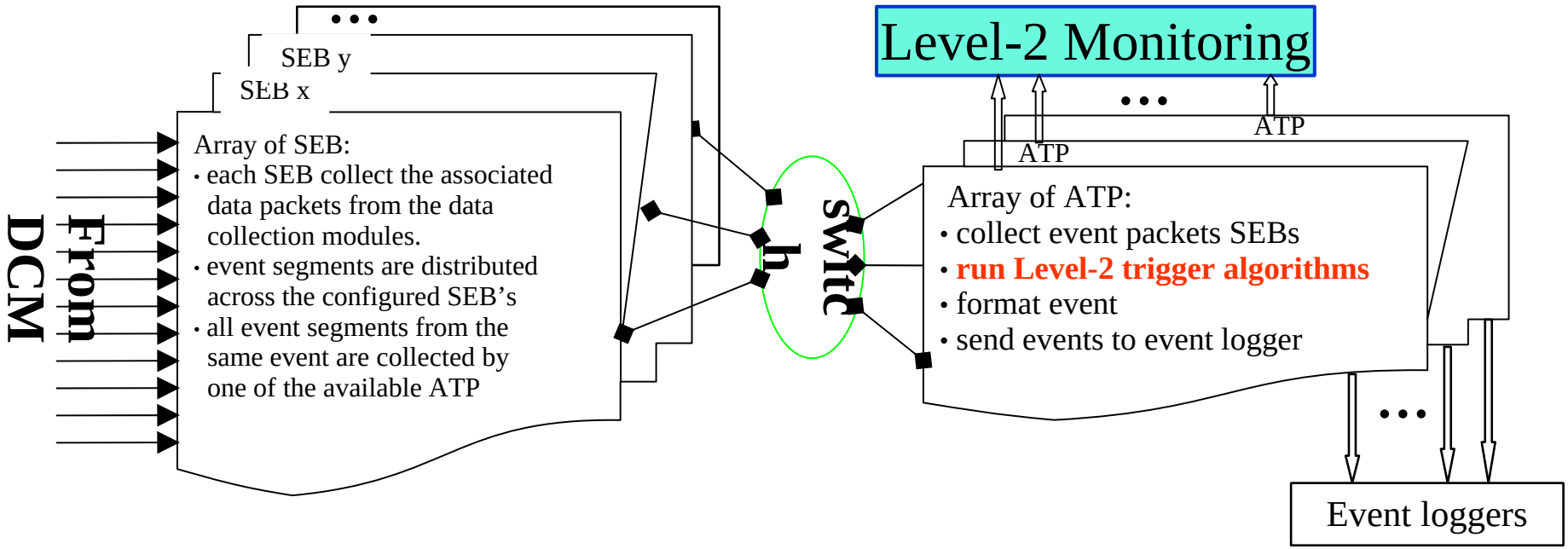


PHENIX Level-2 trigger algorithms run on each Assembly and Trigger Processor (ATP) which is part of the PHENIX Event Builder components. Each ATP collects event segments from all Sub Event Buffer (SEB) nodes and sends each complete formatted event to the event logger.

Level-2 configuration parameters are sent to each ATP from Run Control before each run is started.

# Level-2 Infrastructure

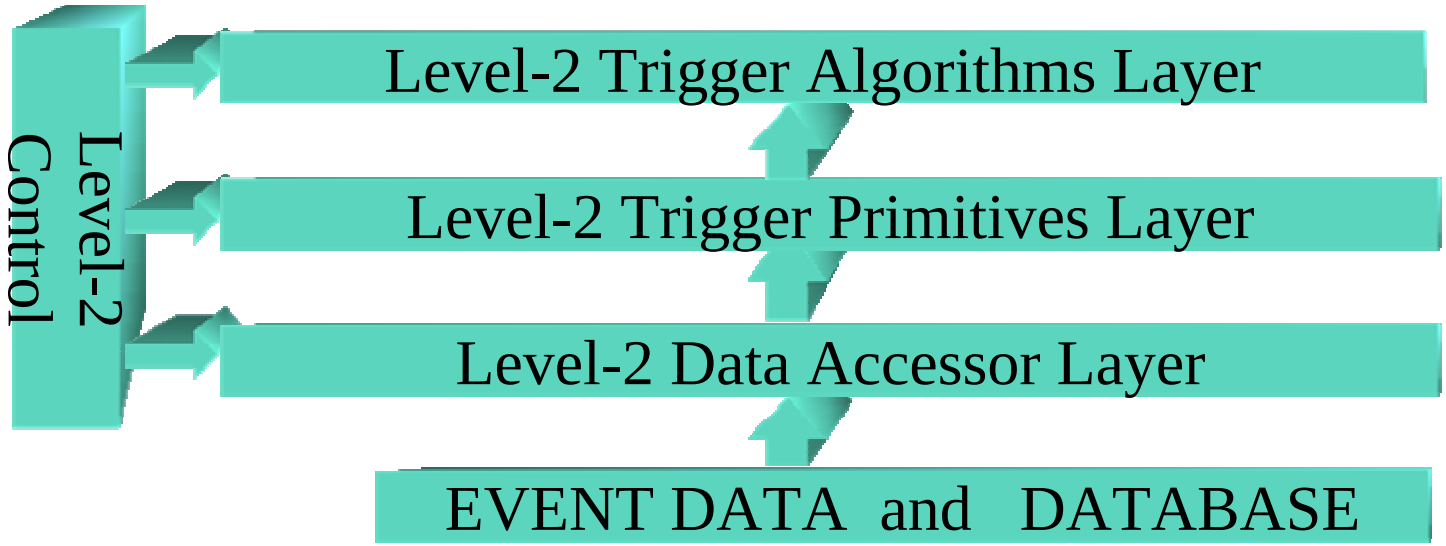


The Level-2 trigger code is written in C++ and can be viewed as different logical layers as shown above. Aside from the control class, each specific trigger class is derived from common template to enforce a common interface. For each event each trigger algorithm object is created which then accesses the associated trigger primitives. Each trigger primitive object is created once only and can be shared by multiple trigger algorithms for each event. The primitive objects access data accessor objects, database objects and other primitive objects. These objects only get instantiated under request. A Level-2 monitoring object is also created at the end of the each event processing and is passed to the remote monitoring process via direct Corba connection.

# Level-2 Trigger in Run-2

- Level-2 trigger system was first implemented in Run-2 for 200 GeV Au+Au collisions.
- There were seven trigger algorithms (which included single electron, electron pair, single deep muon, muon pair, high pT EMCal, High pT charged and coherent peripheral) each of them could use different threshold settings.
- The total Level-2 trigger processing time for a single event was found to be 31 ms (the design value is 25 ms). This was adequate for RHIC Run-2 with 32 ATP's active given the maximum DAQ throughput about 800 Hz.
- For Run-2, regular Level-2 monitoring was only done with events written to disk.
- In over all, the PHENIX Level-2 triggers worked well in Run-2.

# Level-2 Monitoring (new in Run 4)

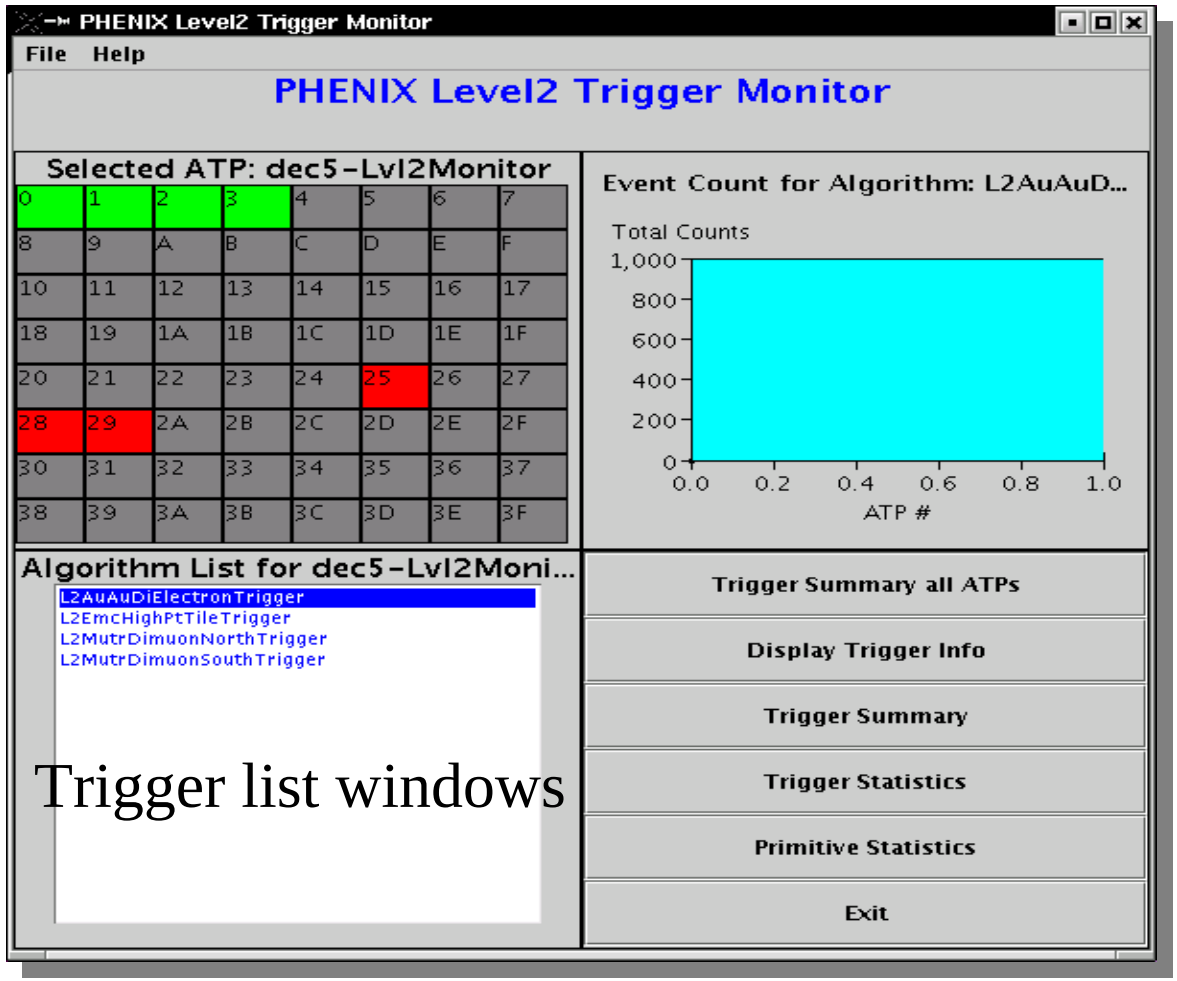


**Note:**

A screen snapshot of the Level-2 real-time performance monitoring windows.

- All running trigger processors (ATP's) are indicated with green box, gray boxes mean that the corresponding ATP's are not enabled and the red boxes indicate the enabled ATP's not responding.

# Monitoring Primitives

Run # 1 ATP # 1 Primitive Statistics

Run # 1 ATP # 1 Primitive Statistics

| Primitive Name | Primit... | Event Count | Error Count | Avg Event ... | Event Use Fraction |
|---|---|---|---|---|---|
| L2AuAuEMCalRichRingMatcher | V1 | 997 | 0 | 0.0103914... | 1.0 |
| L2AuAuElectronCandidate | V1 | 997 | 0 | 0.0460662... | 1.0 |
| L2AuAuElectronInvMass | V1 | 997 | 0 | 0.04655387 | 1.0 |
| L2AuAuRichRingAssociator | V1 | 997 | 0 | 0.0376058 | 1.0 |
| L2AuAuTwoPointTrackerEMC | V1 | 997 | 0 | 0.0248083... | 1.0 |
| L2BbcPrimitive | V1 | 997 | 0 | 6.1023573... | 1.0 |
| L2EMCHighPtTileList | V2 | 7976 | 0 | 0.0134000... | 1.0 |
| L2EMCHitTileList | V1 | 0 | 0 | 0.0 | 1.0 |
| L2EMCTileMaker | V1 | 7976 | 0 | 0.0127929... | 1.0 |
| L2MuiSymsetCalcPerPanel | V1 | 31890 | 0 | 0.0302413... | 1.0 |
| L2MuiTracks | V1 | 1993 | 0 | 0.0155909... | 1.0 |
| L2MutrClusterPrimitive | V1 | 13746 | 0 | 0.0032572... | 1.0 |
| L2MutrCoordPrimitive | V1 | 13745 | 1 | 0.0035918... | 1.0 |
| L2MutrPairPrimitive | V1 | 1979 | 14 | 0.03282888 | 1.0 |
| L2MutrTrackPrimitive | V1 | 1979 | 14 | 0.0187382... | 1.0 |
| L2RichRingFinder | V1 | 997 | 0 | 0.0011173... | 1.0 |

A snapshot of trigger primitive information from a given ATP (example only)

# Trigger Summary Tables

**The table below shows an example of the Level-2 trigger performance (averaged over all ATP's) of all trigger algorithms configured in a test system. The most useful information are:**

**a) Accepted event count**

**b) Average event processing time**

**c) Trigger rejection factor**

Level2 Trigger Summary Table

| AlgoName | Version | EventCount | AcceptCount | AveEvtTime | RejFactor | ErrCount | Bit Set |
|---|---|---|---|---|---|---|---|
| L2AuAuDiEl... | 0.0 | 997 | 30 | 0.046608... | 33.0 | 0 | 0 |
| L2EmcHigh... | 0.0 | 996 | 99 | 0.013878... | 10.0 | 0 | |
| L2MutrDim... | 0.0 | 997 | 0 | 0.0147034 | 1000000.0 | 0 | |
| L2MutrDim... | 0.0 | 996 | 287 | 0.047168... | 3.0 | 14 | 0 |

# Run 4 Strategy

Our run 4 trigger strategy is driven by the realization in 2003 (pushed by Martin Purschke) that we are now able to archive **HUGE** volumes of data as a result of:

- **Writing to four buffer boxes at once**

- **Compressing data in the ATP's before transfer to reduce bandwidth needs**

- **Adding more transfer capability to RCF**

As you will see in a moment, this means that we can record **over 100 $\mu b^{-1}$** of minbias data (compare ~ 4 inverse microbarns minbias data in Run 2).

This means we only need triggers for the **truly** statistics starved physics!

# Level-2 Algorithms in Run-4

**There will be four Level-2 trigger algorithms in Run-4**

- Au+Au di-electron trigger
- High pT electromagnet calorimeter trigger
- Muon North Arm di-muon trigger
- Muon South Arm di-muon trigger

# L2AuAuDiElectronTrigger

Find RICH rings
Use a lookup table to find areas of EMCal that might be associated
Construct tracks using these EMCal hits and all possible PC1 hits
Test each track to see if it is associated with a RICH ring
**If so:**

- Test to see if it is associated with the PC3
- **If so:**
  - Construct the PC3/PC1 track and get the momentum
    make a cut on (EMCal energy) / (PC1/PC3 momentum)
    **accept any track that remains as an electron**
    **Construct pair masses using PC1/PC3 momentum**
    **Cut on mass > 2.4 GeV**

# High pT photon trigger

Divide EMcal into **4 pmt x 4 pmt overlapping** tiles
Add up the energy in each tile
Accept event if any tile is greater than threshold (eg. 3.5 GeV)

# Di-Muon Triggers

Find a stub in the **MuID**
See if it points to a hit in **MuTr** station 3
If so:

- Is there a matching track in MuTr?
- If so:
  - **Calculate momentum in MuTr**
  - **Construct masses for all pairs**
  - **Make mass cut**

# Effect of high data archiving rate

I made some estimates in 2003 of how much **minbias data** we would get and how much **rare event triggered data** we would get. The following two slides show the situation if we were stuck with **35 MB/s** archiving rate (the Run 2 rate), and if we can use **240 MB/s** archiving rate (both rates before compression).

In fact it has been demonstrated in Run 4 that we can archive at 300 MB/s **compressed** rate.

These estimates assume that the luminosity in the run linearly increases during the run. The horizontal axis shows the assumed peak BBLL1 count rate at the end of the run.

# 35 MB/s archiving (not relevant to us now, just a reminder of how hard we would have had to work!)

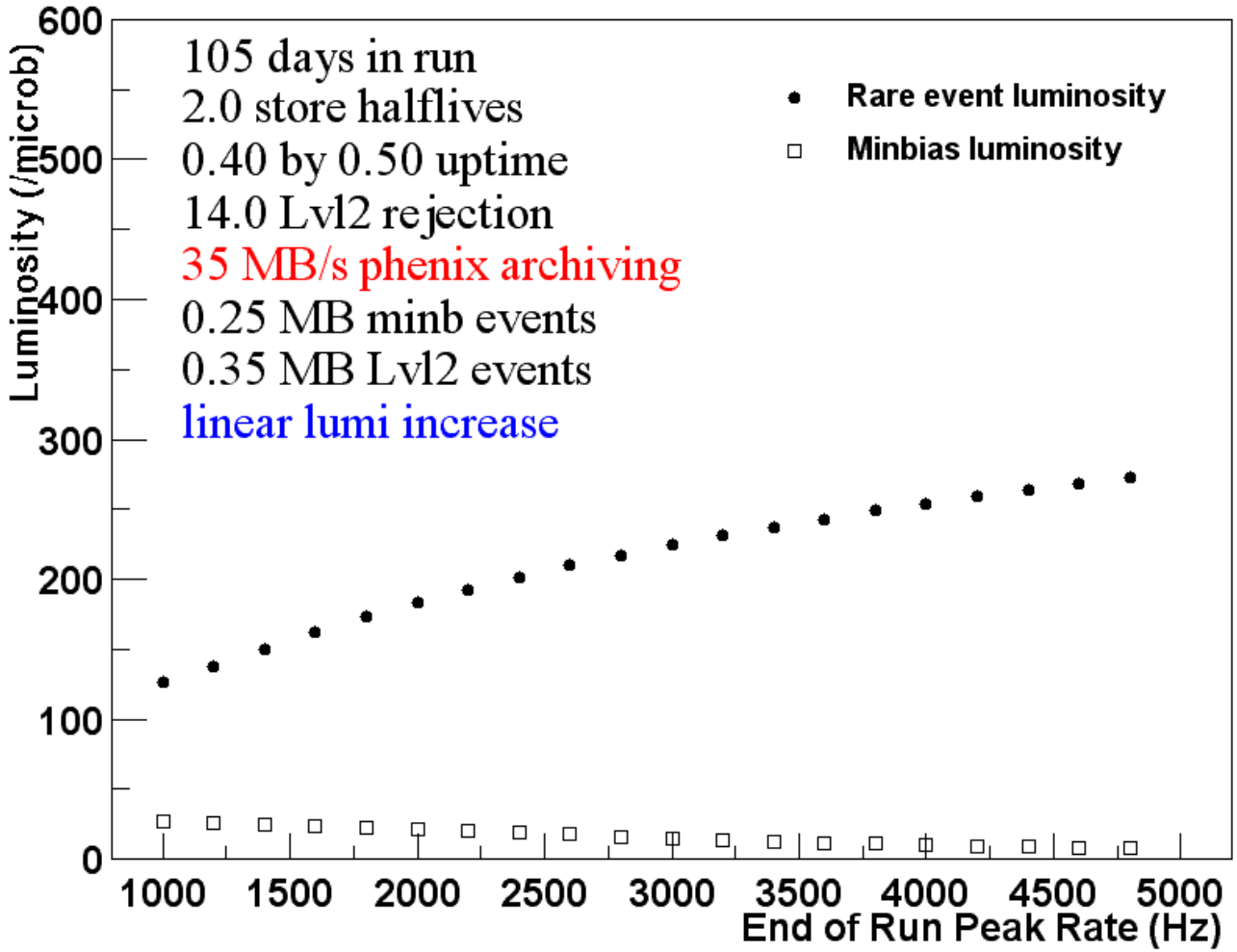

# 240 MB/s archiving

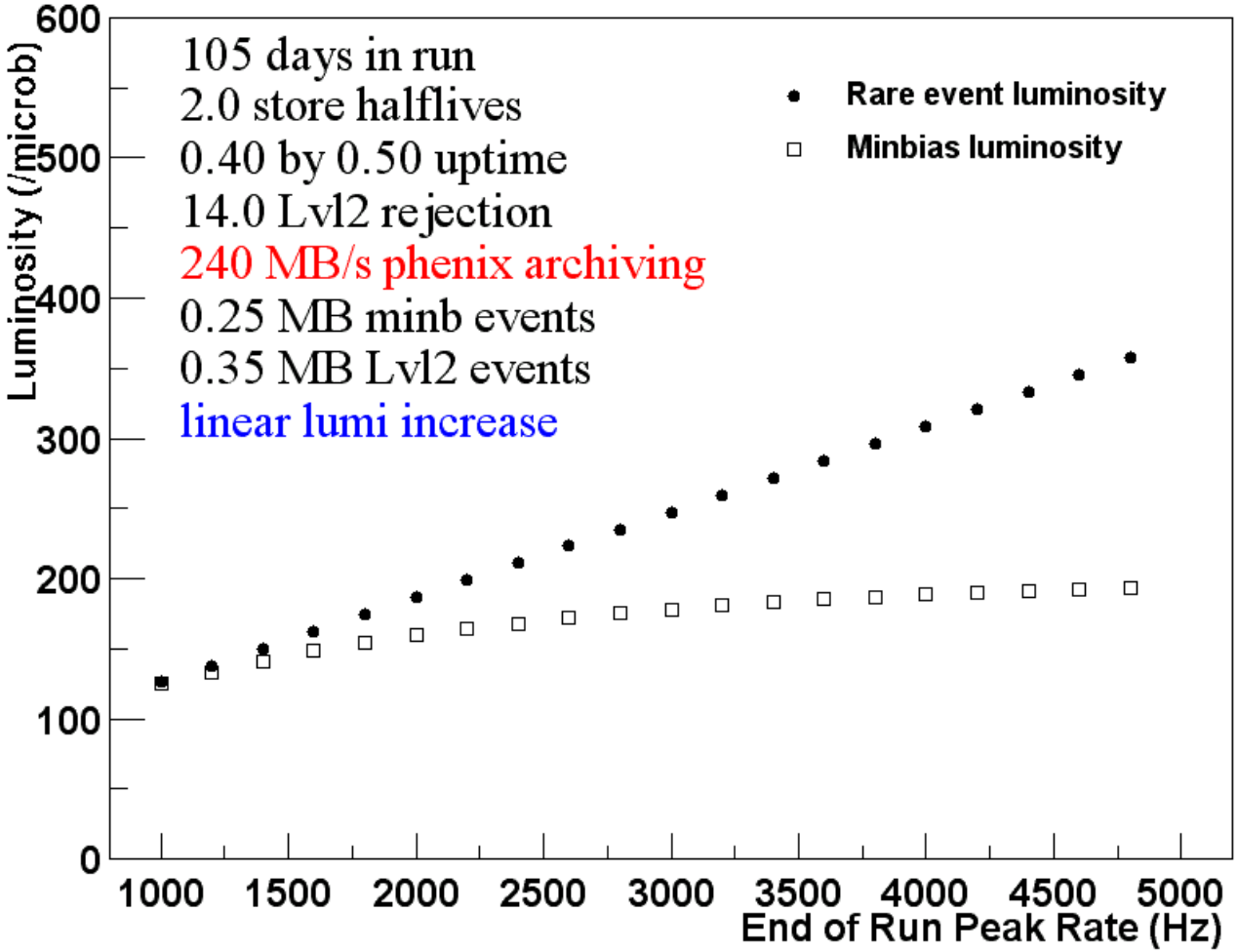


**No impact on the rare event sample, but the recorded minbias sample is 150 – 175 $\mu b^{-1}$ for believable luminosities.**

## But!

The data volume that we are recording is enormous. If we want to look at, for example, a J/ψ peak during the run it is not feasible - analyzing a large fraction of the data is not feasible on the time scale of the run.

But if we run level 2 triggers with high rejection power, they tag the interesting events for us, and we can analyze only those events that pass the central arm J/y trigger, for example, to get J/y yields. This reduces the data volume by a factor of 40.

**The expected trigger rejections are roughly:**

| | |
|---|---|
| **Au+Au di-electron trigger** | **45** |
| **High pT electromagnet calorimeter trigger** | **100** |
| **Muon North Arm di-muon trigger** | **50** |
| **Muon South Arm di-muon trigger** | **50** |

# Evaluating trigger performance

There is a module (**Lvl2RunTrigReco**) that runs triggers in Fun4All as part of the reconstruction loop on PRDF files. A second module (Lvl2RunTrigSelect) can be used to abort processing if one of the level 2 triggers does not fire (to make things faster).

The **trigger decision** and **trigger primitives** are written to the DST node, and then can compared with the results of offline reconstruction by an **evaluator module** for each trigger.

To get the trigger efficiency for di-electrons, for example, the evaluator module finds **all electron pairs from PHCentralTracks** using the appropriate electron track cuts, and then sees which pairs were found by the di-electron trigger. The track matching is done by comparing hit positions in PC1, PC3 and EMCal between offline and level 2.

# Timescale

We are not yet seeing luminosity high enough to warrant running level 2 triggers **with rejection**. But we want to start running the triggers with no rejection so that we can start filtering out a small fraction of the data for analysis to see our rare signals during the run.

We hope that level 2 triggers will be running in the DAQ (without rejection) sometime next week.

In the meantime, we continue to evaluate the triggers by running them in Fun4All on Run 4 data files, and comparing with the results of offline reconstruction.