HAMAMATSU

PHOTOMULTIPLIER TUBES FOR GAMMA CAMERA

For Gamma Camera and Scintillation Counting, Low Profile, High P. H. R.

Type. No.	Cathode Sensitivity			Anode Sensitivity					Rise Time (ns)	P.H.R.*3 (%)	Stability*4 (%)
	Luminous (μA/lm)	Blue *1 (μA/lm-b)	Q.E. *2 (%)	Luminous (A/lm)	Blue *1 (A/lm-b)	Dark Current (nA)	Gain	Ebb (Vdc)			
	Typ.	Typ.	Typ.	Typ.	Typ.	Typ.	Typ.		Typ.	Typ.	Typ.
R6231-01 (51mm Dia.)	110	12.0	30	30	3.5	2	2.7×10^5	1000	5.0	8.5/a	0.5
R6232-01 (60mm Dia.)	110	12.0	30	30	3.5	2	2.7×10^5	1000	6.0	8.3/a	0.5
R6233-01 (76mm Dia.)	110	12.0	30	30	3.5	2	2.7×10^5	1000	6.0	8.5/b	0.5
R6234-01 (60mm Hex.)	110	12.0	30	30	3.5	2	2.7×10^5	1000	6.0	8.3/a	0.5
R6235-01 (76mm Hex.)	110	12.0	30	30	3.5	2	2.7×10^5	1000	6.0	8.3/b	0.5
R6236-01 (60mm Squ.)	110	12.0	30	30	3.5	2	2.7×10^5	1000	6.0	8.3/a	0.5
R6237-01 (76mm Squ.)	110	12.0	30	30	3.5	2	2.7×10^5	1000	6.0	8.3/b	0.5

*1: Filter: CORNING CS-5-58 polished to 1/2 stock thickness
*2: At 420 nm
*3: Measured with an NaI (Tl) scintillator and a ^{57}Co source.
a: 51 mm(2") diameter × 51 mm(2") thickness, b: 76 mm(3") diameter × 76 mm(3") thickness
*4: This is defined as follows under the operation for 16 hours at a constant count rate of 1k cps:

$$Dg = \frac{\sum_{i=1}^{n} |P - P_i|}{n} \cdot \frac{100}{P} \ (\%)$$

Where P is the mean pulse height averaged over n readings, Pi is the pulse height at the i-th reading, and n is the total number of readings.

VOLTAGE DISTRIBUTION RATIO AND SUPPLY VOLTAGE

Electrodes	K	G	Dy1	Dy2	Dy3	Dy4	Dy5	Dy6	Dy7	Dy8	P
Ratio	2	2	1	1	1	1	1	1	1	1	

Supply Voltage: 1000Vdc, K: Cathode, Dy: Dynode, P: Anode G: Grid

NOTE: Standard Bleeder Assembly or Custom Designed Bleeder Assembly will be provided upon your requests.

Subject to local technical requirements and regulations, availability of products included in this promotional material may vary. Please consult with our sales office.
Information furnished by HAMAMATSU is believed to be reliable. However, no responsibility is assumed for possible inaccuracies or omissions. Specifications are subject to change without notice. No patent rights are granted to any of the circuits described herein. © 1999 Hamamatsu Photonics K.K.

PHOTOMULTIPLIER TUBES FOR GAMMA CAMERA

Dimensional Outlines and Basing Diagrams (Unit: mm)

R6237-01

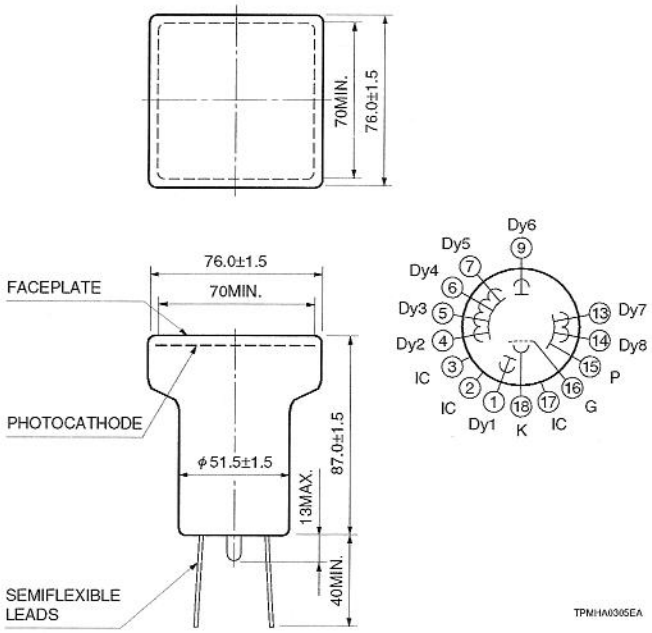

HAMAMATSU

HAMAMATSU PHOTONICS K.K., Electron Tube Center
314-5, Shimokanzo, Toyooka-village, Iwata-gun, Shizuoka-ken, 438-0193, Japan, Telephone: (81)539/62-5248, Fax: (81)539/62-2205
U.S.A.: Hamamatsu Corporation: 360 Foothill Road, P. O. Box 6910, Bridgewater. N.J. 08807-0910, U.S.A., Telephone: (1)908-231-0960, Fax: (1)908-231-1218
Germany: Hamamatsu Photonics Deutschland GmbH: Arzbergerstr. 10, D-82211 Herrsching am Ammersee, Germany, Telephone: (49)8152-375-0, Fax: (49)8152-2658
France: Hamamatsu Photonics France S.A.R.L.: 8, Rue du Saule Trapu, Parc du Moulin de Massy, 91882 Massy Cedex, France, Telephone: (33)1 69 53 71 00, Fax: (33)1 69 53 71 10
United Kingdom: Hamamatsu Photonics UK Limited: Lough Point, 2 Gladbeck Way, Windmill Hill, Enfield, Middlesex EN2 7JA, United Kingdom, Telephone: (44)181-367-3560, Fax: (44)181-367-6384
North Europe: Hamamatsu Photonics Norden AB: Smidesvägen 12, SE-171-41 SOLNA, Sweden, Telephone: (46)8-509-031-00, Fax: (46)8-509-031-01
Italy: Hamamatsu Photonics Italia: S.R.L.: Strada della Moia, 1/E, 20020 Arese, (Milano), Italy, Telephone: (39)02-935 81 733, Fax: (39)02-935 81 741

TPMH1133E02
MAR. 1999
Printed in Japan (1000)

Dimensional Outlines and Basing Diagrams (Unit: mm)

R6233-01

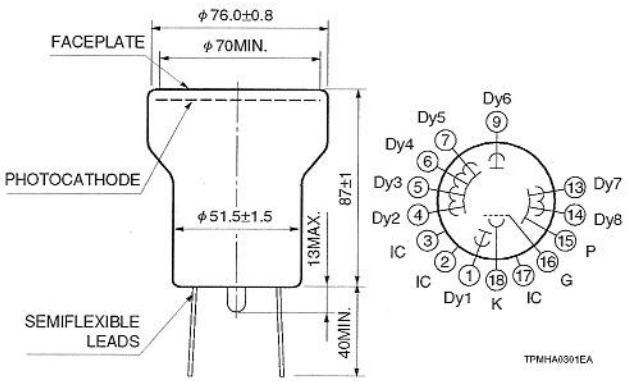

R6234-01

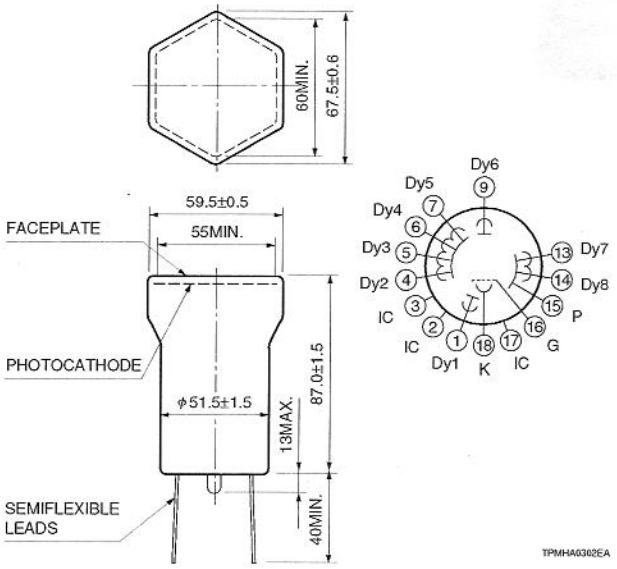

R6235-01

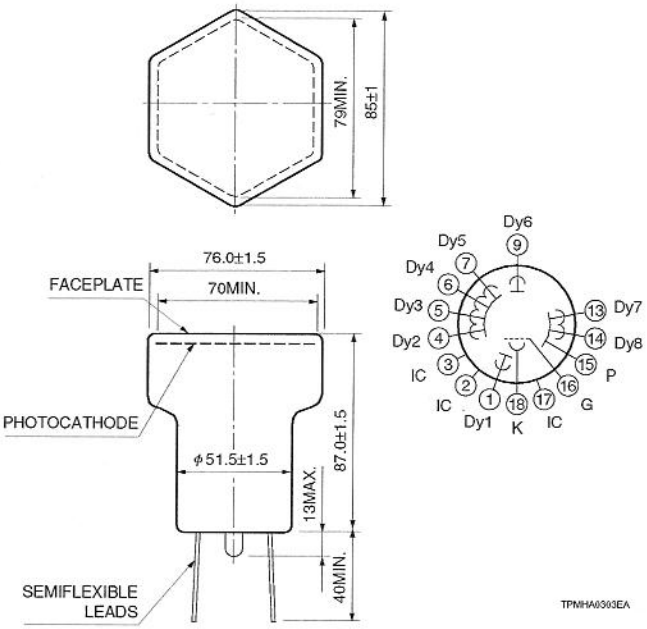

R6236-01

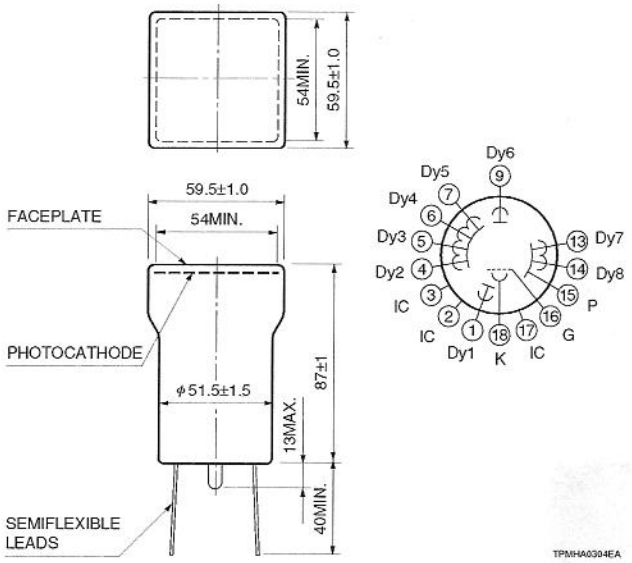

PHOTOMULTIPLIER TUBES FOR GAMMA CAMERA

Figure 1: Typical Spectral Response

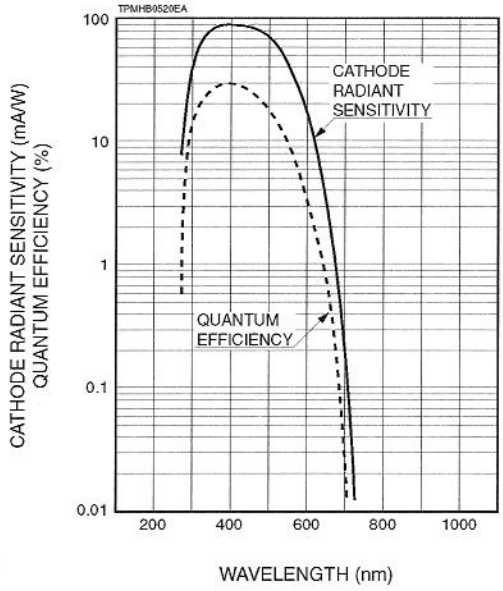

Figure 2: Anode Sensitivity and Gain Characteristic

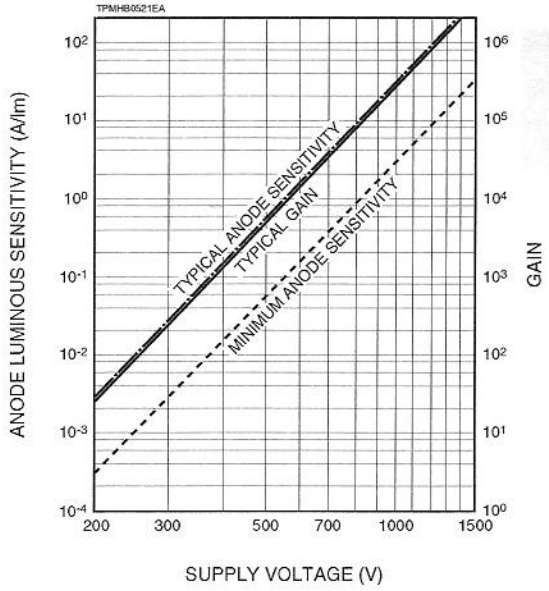

Dimensional Outlines and Basing Diagrams (Unit: mm)

R6231-01

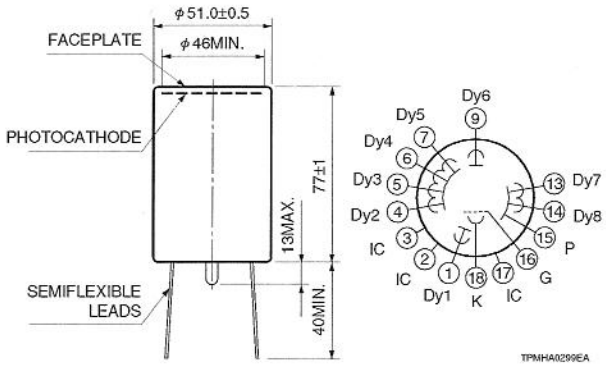
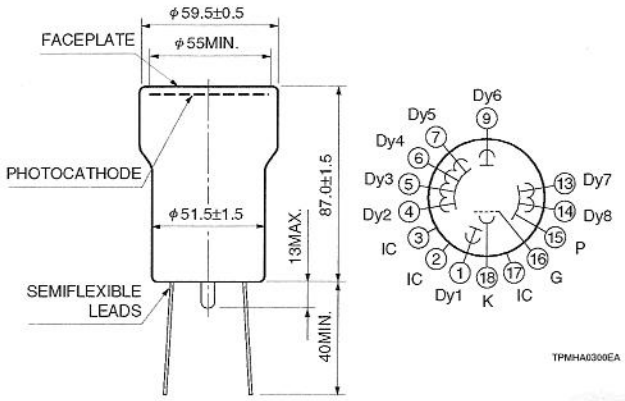
R6232-01