The MOEDAL Experiment: A Progress Report (March 2004)

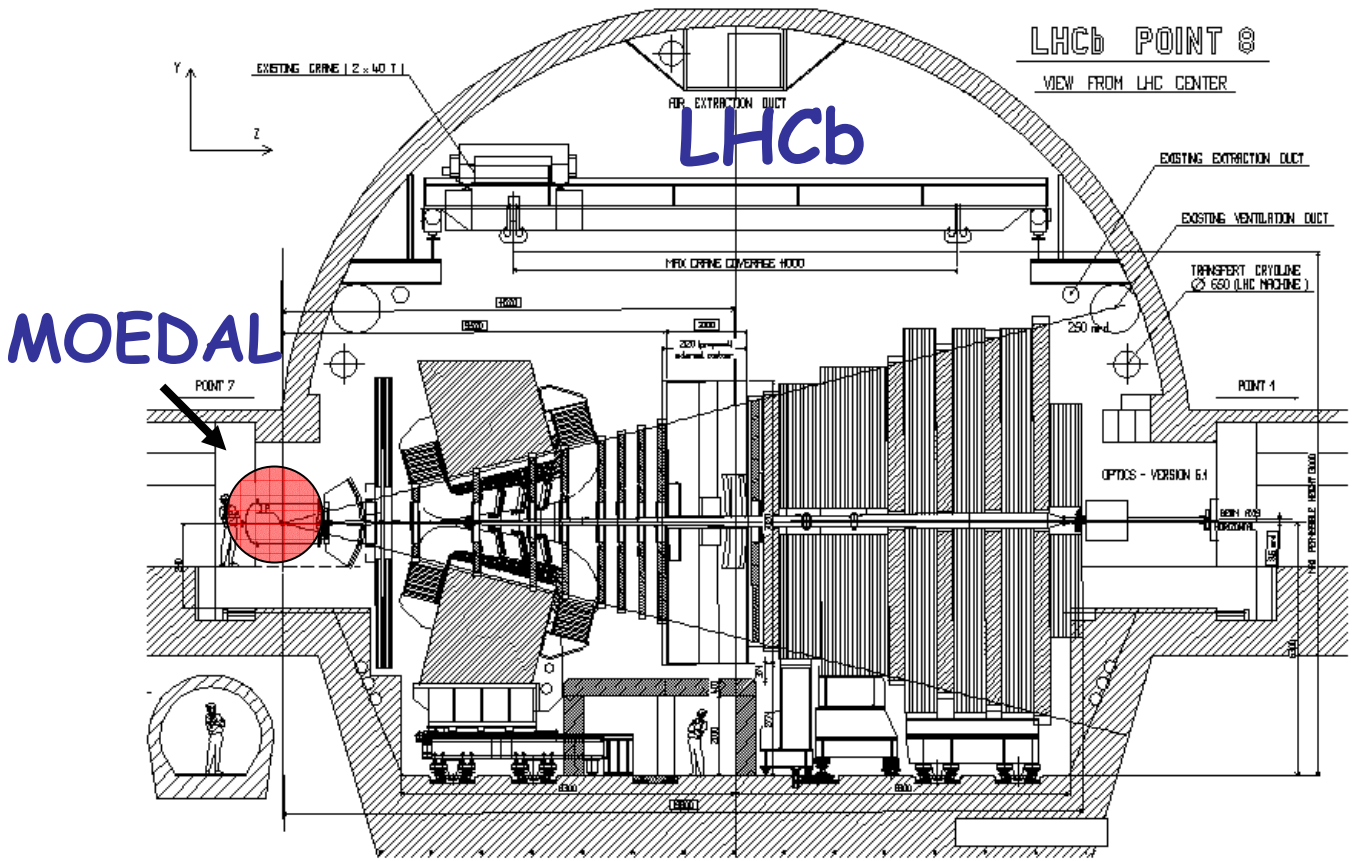

James Pinfold

(for the MOEDAL Collaboration)

The MOEDAL Collaboration

Centre for Subatomic Research, University of Alberta, Edmonton, Alberta T6tG OV1, CANADA: B. Caron, J. de Jong, J. L. Pinfold, J. Soukup, W. J. McDonald.

Institute of Physics, University of Bologna, Via Irnerio 46, 1040126 Bologna, Italy: G. Giacomelli, H. Dekhissi, A. Margiotta, L. Patrizii, P. Serra, M. Spurio

CERN, Geneve 23, Switzerland: M. Placidi

Department of Physics, University of Cincinnati, Ohio 45221, USA: K. Kinoshita

Laboratoire de Physique Nucleaire, Universite de Montreal, Case Postale 6128, Succ. "A", Montreal, Quebec H3C 3J7, Canada: A. Houdayer, C. Leroy

Department of Physics, Northeastern University, 360 Huntington Ave, 112 Dana, Boston, MA 02115, USA: J. Swain

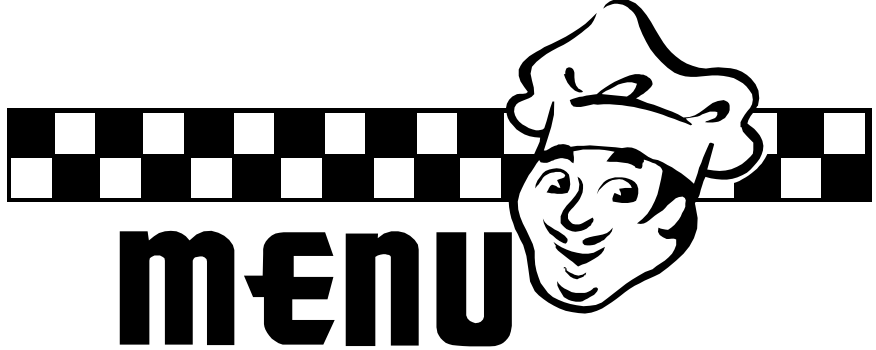

- Introduction
- Radiation tolerance of the MOEDAL
- Studying the material budget in the LHCb VELO region
- Moving towards the final design of MOEDAL detector
- Possible extension of MOEDAL sensitivity to multiply magnetically charged monopoles
- Monitoring MOEDAL performance
- Moving towards the Technical Proposal

A Very Brief Review of Monopole Properties

- Quantized magnetic charge: $ge=nhc/2 = n(137/2)e$ $(n=1,2,3\ldots)$
- Magnetic coupling constant: $g^2/hc= 34.25n^2$
- Energy gain in a magnetic field: $dE/dx=gB=0.2n^2$ (GeV/cm)B(Tesla)
- Ionization Rate (for $\beta>10^{-3}$): →

$$\left(\frac{dE}{dx}\right)_m = \left(\frac{dE}{dx}\right)_{BB}\left(\frac{g}{e}\right)^2 (mn\beta)^2$$

- Ionization Rate (for $\beta<10^{-3}$): →

$$\left(\frac{dE}{dx}\right)_m \geq \frac{1}{4}\left(\frac{\beta}{5\times10^{-3}}\right)\frac{\overline{V}_f^2}{\alpha^2 c^2}\left(\frac{dE}{dx}\right)_{BB}$$

- Mass…not predicted

Brief Review of MOEDAL Detection Technique

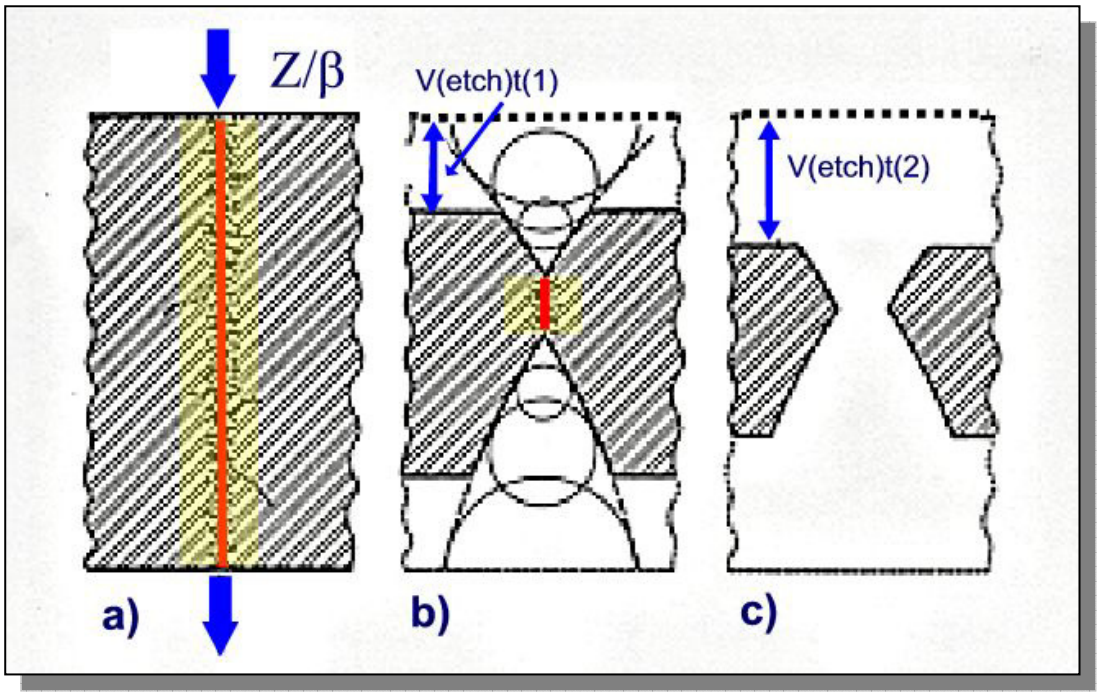

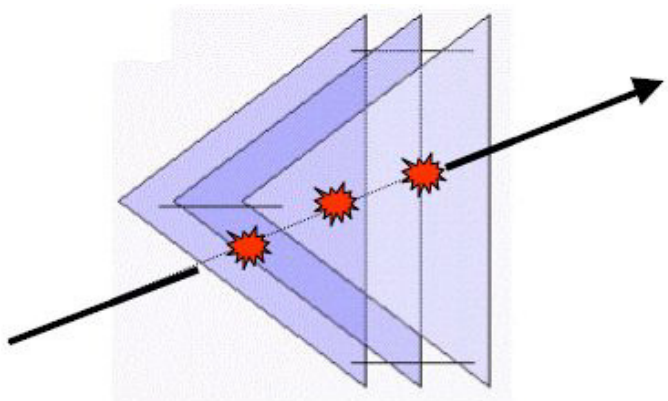

Look for aligned etch pits In multiple sheets

- The passage of a highly ionizing particle through the track-etch detector is marked by an invisible damage zone along the trajectory.
- The damage zone is revealed as a cone shaped etch-pit when the plastic detector is etched in a controlled manner using a hot sodium hydroxide solution.
- The depth of the etch pit is an increasing function of the particle Z/β

Radiation Environment Around VELO Dose

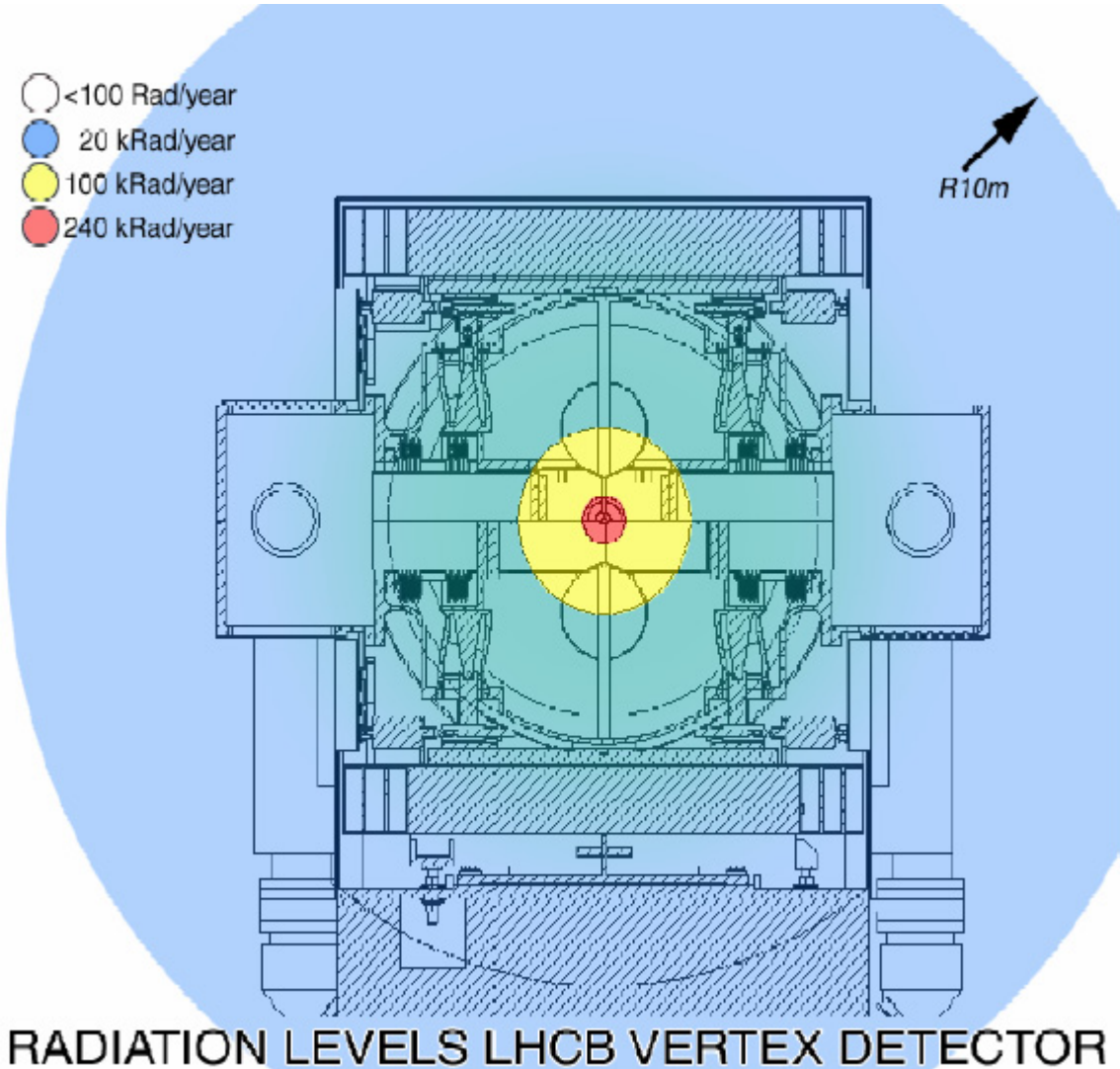

Hadron Fluxes

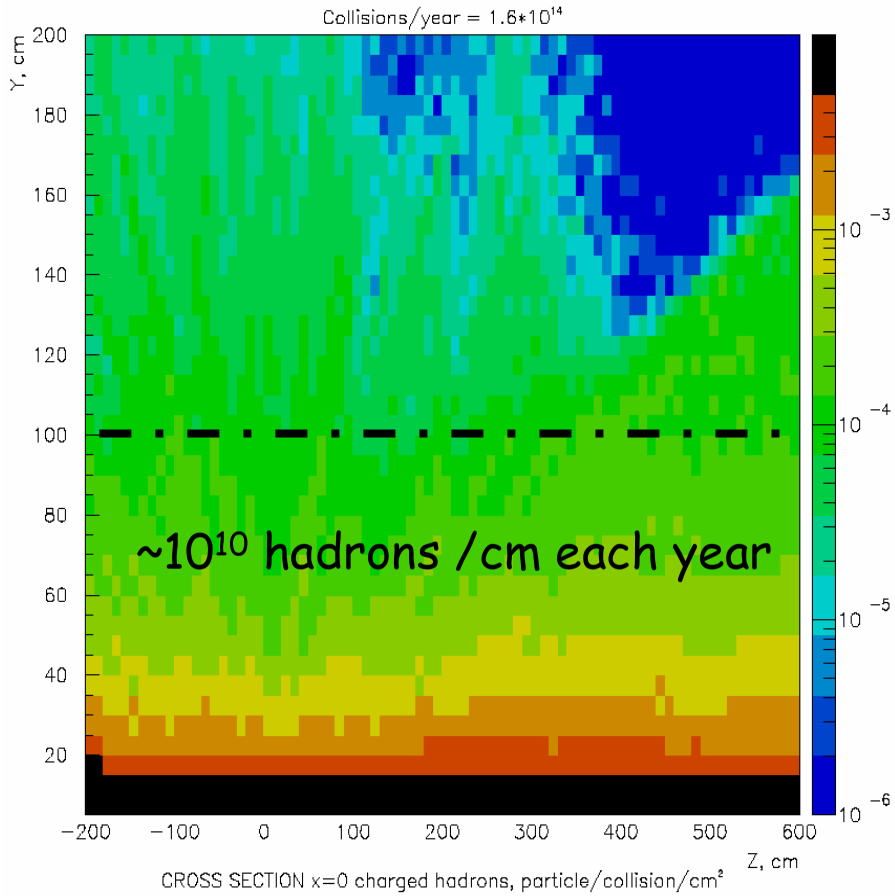

Charged hadron flux x=0

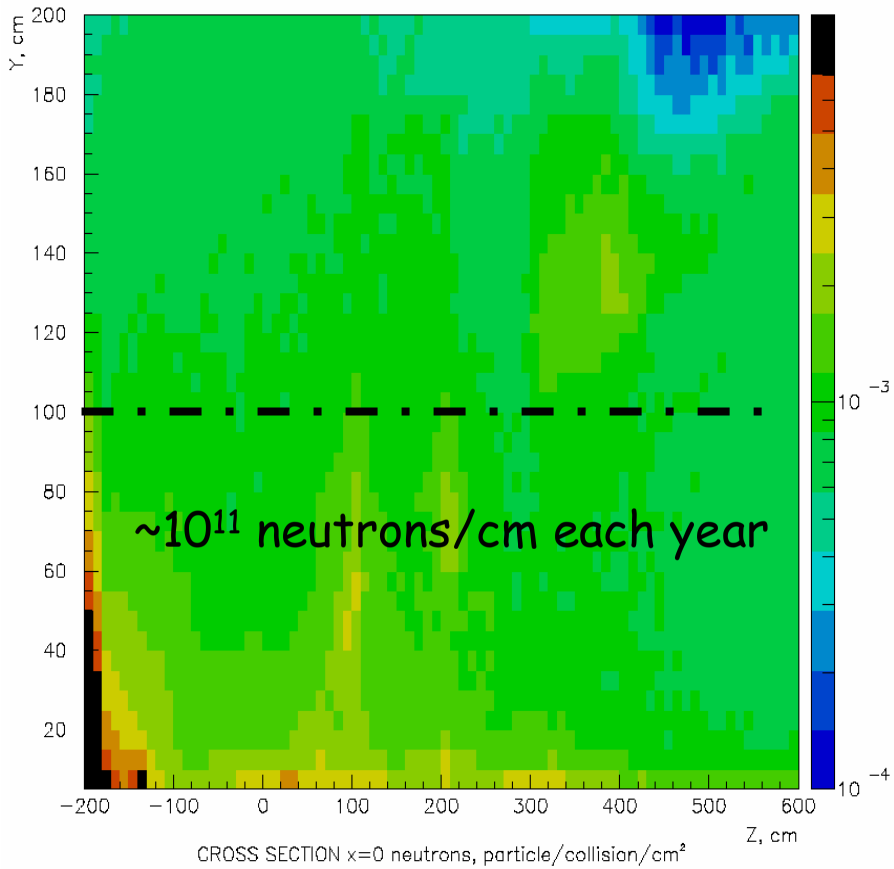

Neutron flux, x=0

Radiation Resistance of CR39/Lexan

	CR-39	Rodyne	UG-5
Solid angle ($\Omega/4\pi$)	0.7	0.7	$\simeq$0.18
Etchant	6.25N NaOH	6.25N NaOH	49% HBF_4
Final/initial thickness	0.3	0.4	0.84
$(Q/\beta)_{min}$ for $\theta=0°$	20	65	84
$(Q/\beta)_{min}$ for $\theta=45°$	31	73	84
Minimum detectable β for			
$n=1$	0.025	0.86	Undetectable
$n=2$	0.006	0.076	0.14
Dose limit (Mrad)	2	200	1000
Etch pits/hadron due to spallation	10^{-4}	4×10^{-6}	2×10^{-7}
Density of detected etch pits (cm^{-2})	6×10^{6}	2×10^{5}	10^{5}

- Results obtained from an expt. at the D0 intersection regions at FNAL – Phys. Rev. Lett. 59, p2523, 1987.
- Chemistry of rad. sensitivity of CR-39 polymers has been studied – J. Electrochem. Soc., p811, 1982.
- Track etch detectors can have the following radiation tolerance:
  CR39 2MRads - Rodyne(lexan) 200 Mrad - UG-5 glass 1000 Mrads.
- Dose at LHCb IP compatible with unlimited exposure of CR39.
- We can collect 10^8 etch pits/cm on the plastic detectors and still be able to register a monopole track. This corresponds to ~10 yrs of exposure to neutral and charged hadrons at the LHCb IP.

Material in the LHCb Vertex (1)

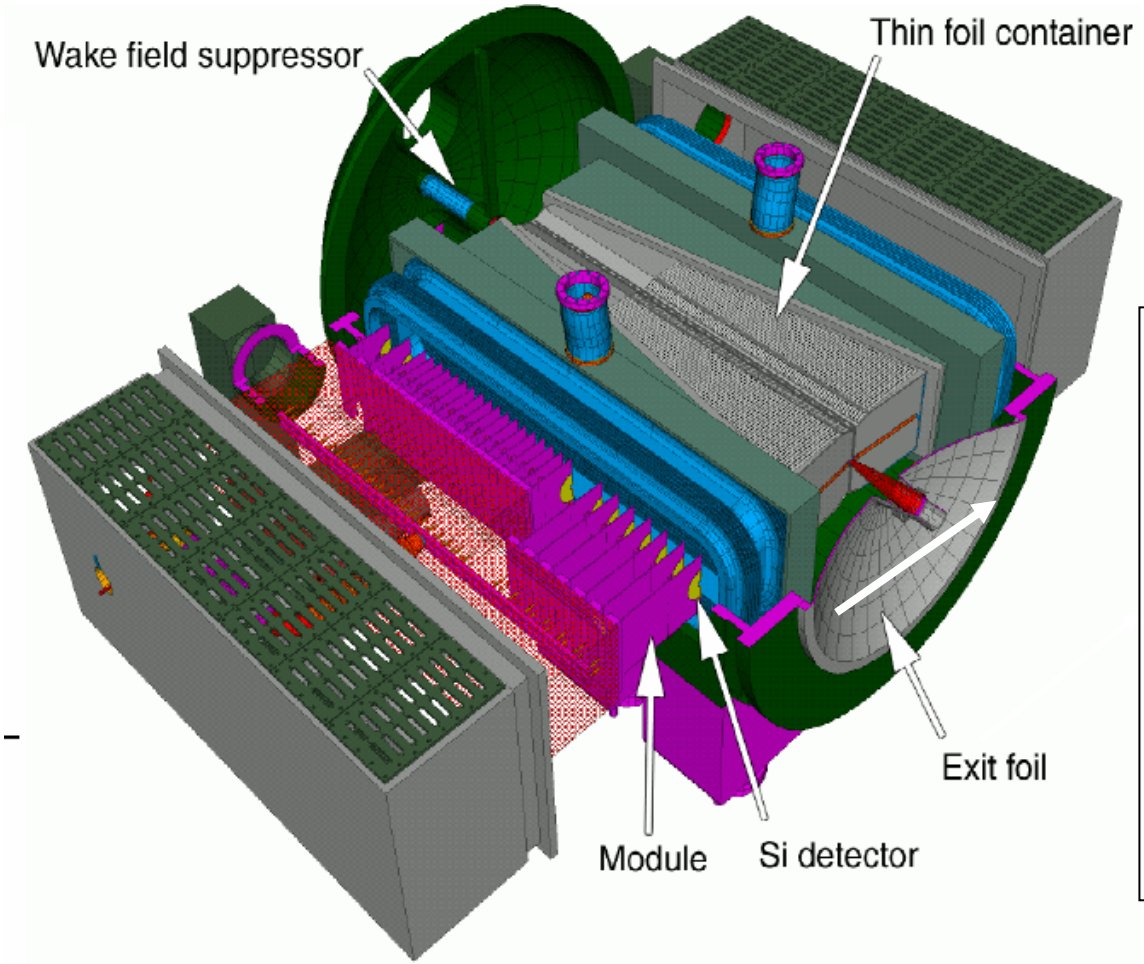

+ COVER

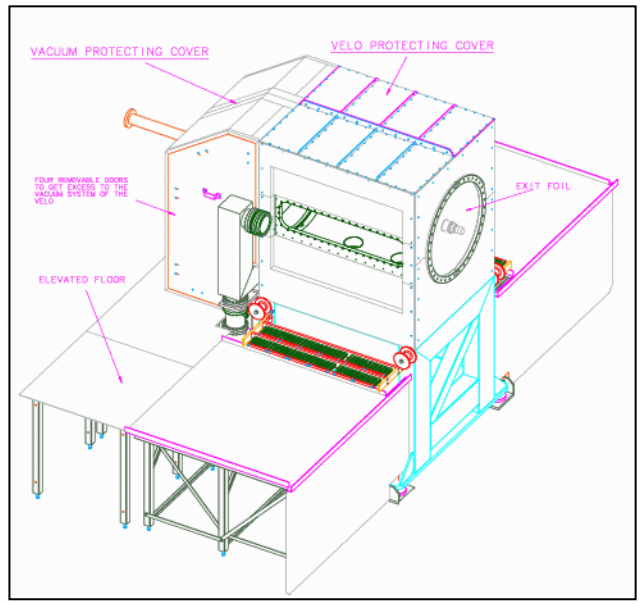

The LHCb IP – the VELO region

Material in the LHCb Vertex (2)

- Material around the vertex region is complicated and not that symmetric
- We worked with the NIKHEF group in LHCb responsible for the mechanical design of VELO region. They made 60 cross-sections, through the beam axis – every 3° in ϕ.
- For each phi cross-section we will draw vectors every 2 degrees in *theta* and note the thickness and type of material the vectors pass through.
- Using the 10.8K (60 x 180) vectors that result we built up a 3-D picture of material around the vertex region.
- This material map is the input to the existing Monte Carlo program that predicts acceptance of monopoles (and other highly ionizing particles)

Estimating Backgrounds Using GEANT4(.5.2)

- Backgrounds due to spallation products in the detector and environs – etch pits from hadronic backgrounds.
- We are using GEANT4 to provide extra detailed information on the size of the potential background.
- It isa expected that backgrounds will be very small due to the uniquess of a monopole signal (>3 precisely aligned pairs of etch pits, consistent with a monopole charge, pointing to the IP within ~1 cm)
- Use Geant4 Hadronic Physics lists: http://cmsdoc.cern.ch/~hpw/GHAD/HomePage/ In particular:
  - High energy calorimetry (for spallation products pruced by high energy particles from interactions)
  - Low energy dosimetry (to look at neutron produced damage)
- The high energy calorimetry code uses: *" The second physics list, QGSP -- theory driven modeling for the reactions of energetic pions, kaons, and nucleons. It employs quark gluon string model for the 'punch-through' interactions of the projectile with a nucleus, the string excitation cross-sections being calculated in quasi-eikonal approximation. A pre-equilibrium decay model with an extensive evaporation phase to model the behavior of the nucleus 'after the punch'. It uses current best pion cross-section."*

VELO Material Budget

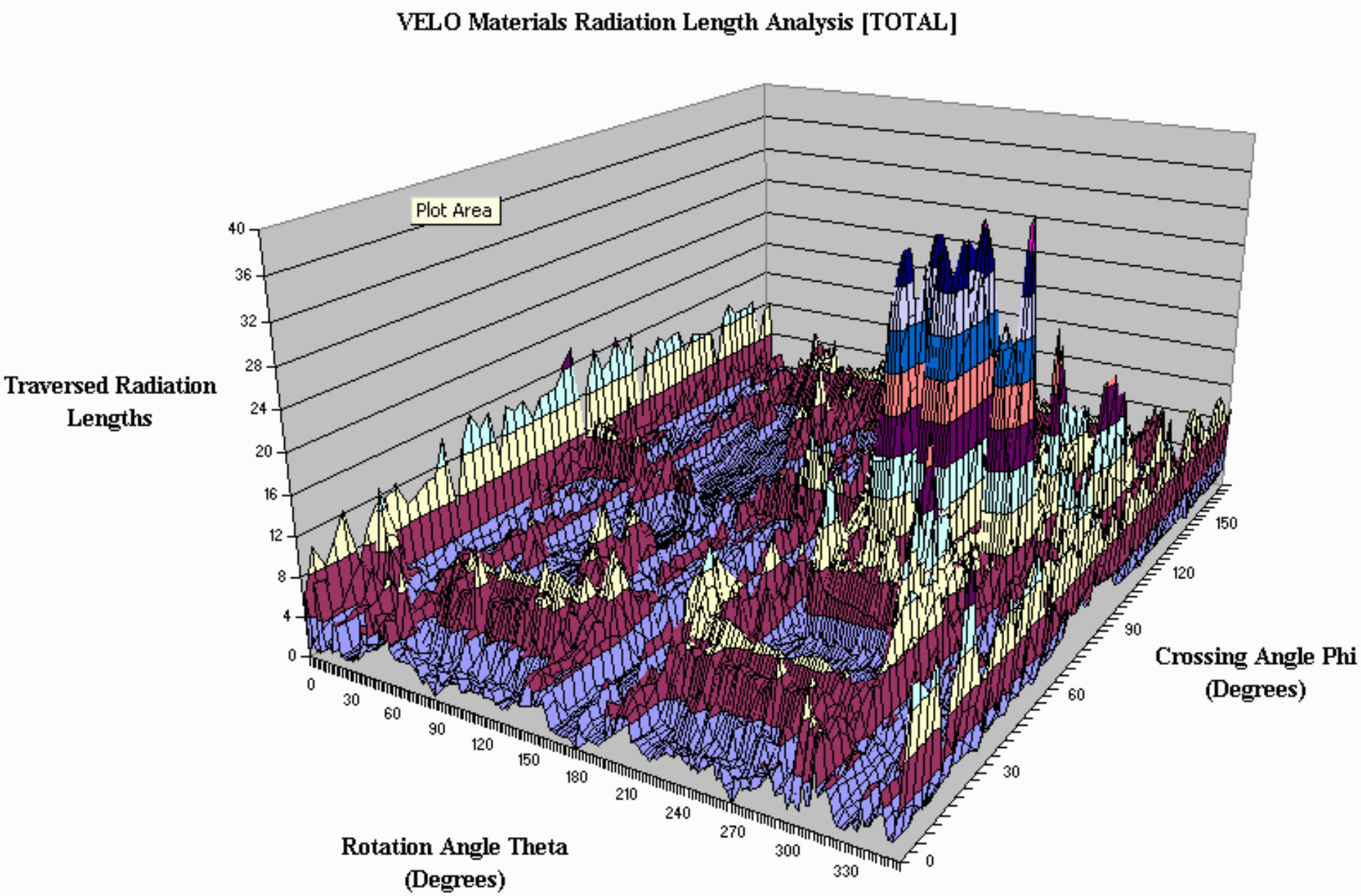

The Conceptual Design of MOEDAL

- In June of 2001 the LHCb collaboration completed the LHCb "VELO" (VErtex Locator) TDR that incorporated the latest LHCb vertex region design.
- We have been tracking developments in the VELO region since that time.
- The LHCb vertex region design is now reasonably mature Thus we have begun the design of the final MOEDAL detector.
- However, there is still the issue of the placing of a crane for the VELO region…we need to know LHCb plans here.
- This design presented here is conceptual only and must be refined in consultation with the LHCb collaboration and CERN TIS group.
- Thus we expect this design to evolve.
- Obviously the LHCb collaboration must be completely happy with the final product which must also satisfy CERN safety criteria,.

The Conceptual Design of MOEDAL(1)

Support from roof only

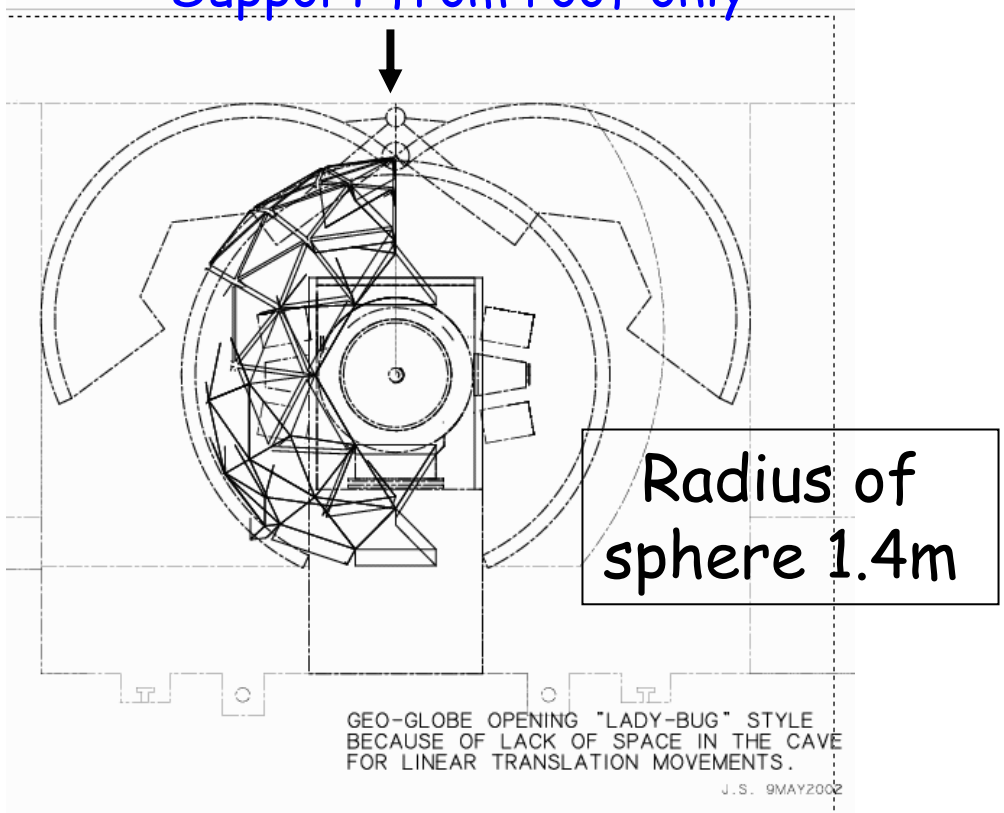

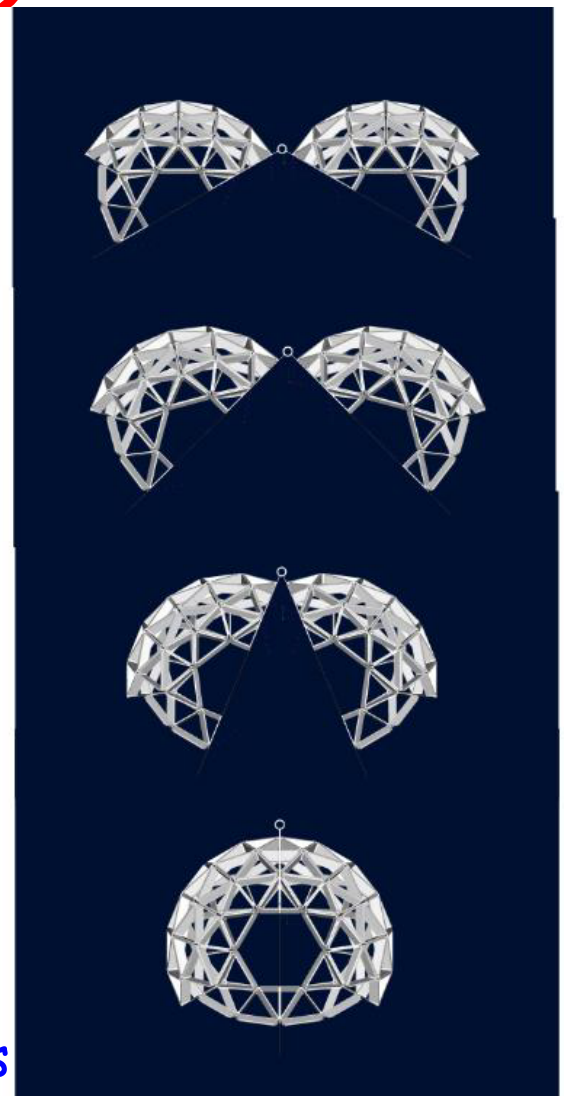

Detector is a housed in geodisic segments. →
To allow fast access (within an hour)
to VELO. The detector opens lake a "ladybird's wings".

The Conceptual Design of MOEDAL(2)

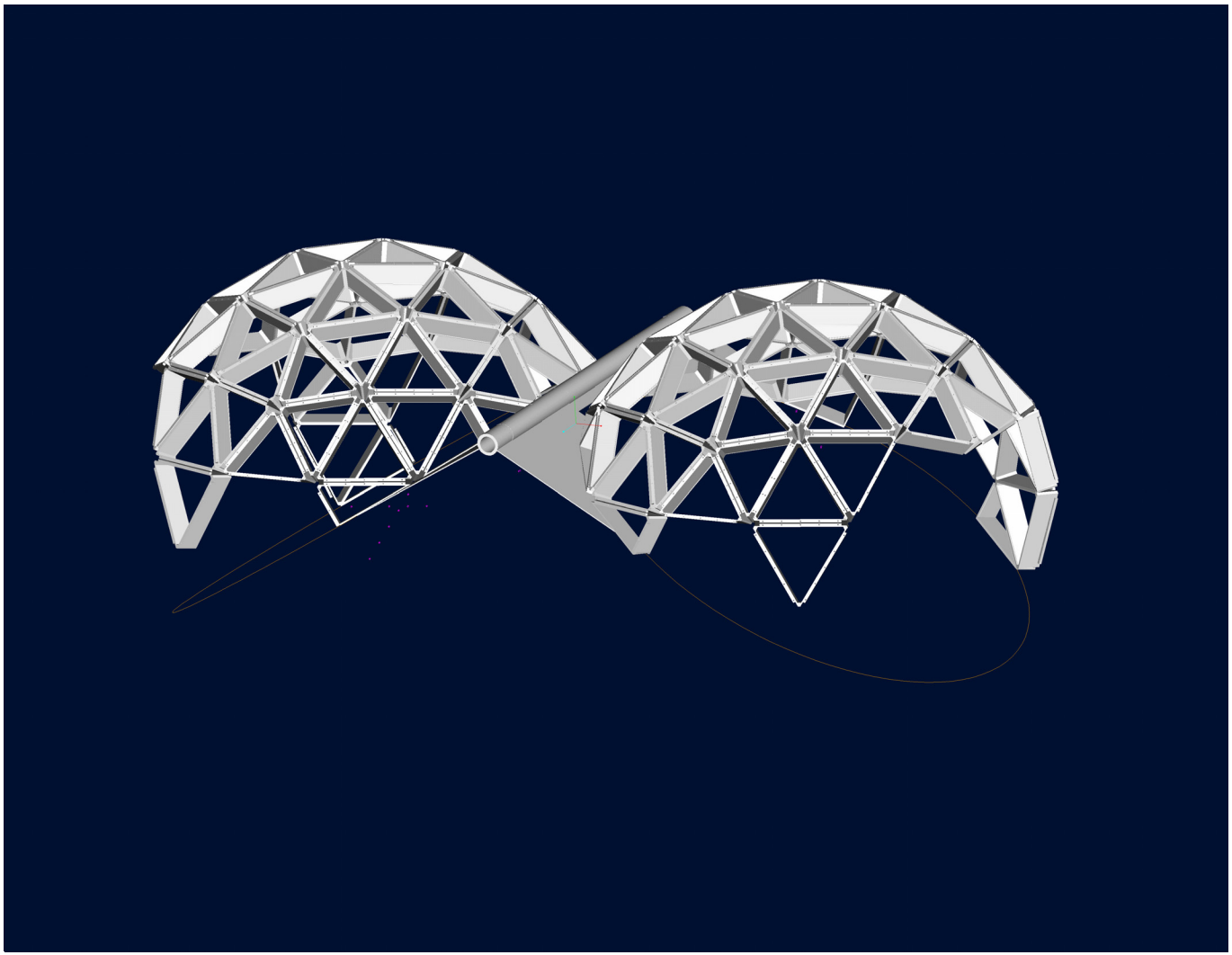

The Conceptual Design of MOEDAL(3)

- Light aluminium frame containing five plastic sheets per triangle element (Lexan-CR39-Lexan-CR39-CR39-lexan). Total thickness ~ 5 mm.
- Alignment of monopole track within the module ~20 microns (using dowel pins)
- All triangular elements do NOT have to be installed. The design allows for access "panels" to LHCB vertex vacuum region.
- Frame holds plastic so that tracks are as normal as possible to the plastic, and racks reconstructed can be pointed to the

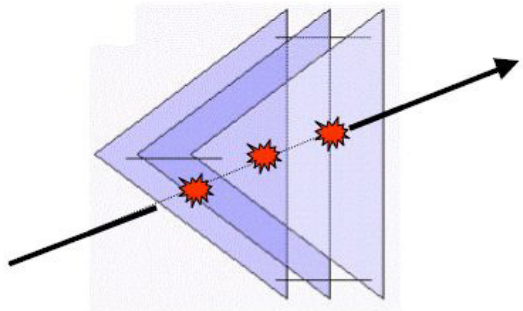

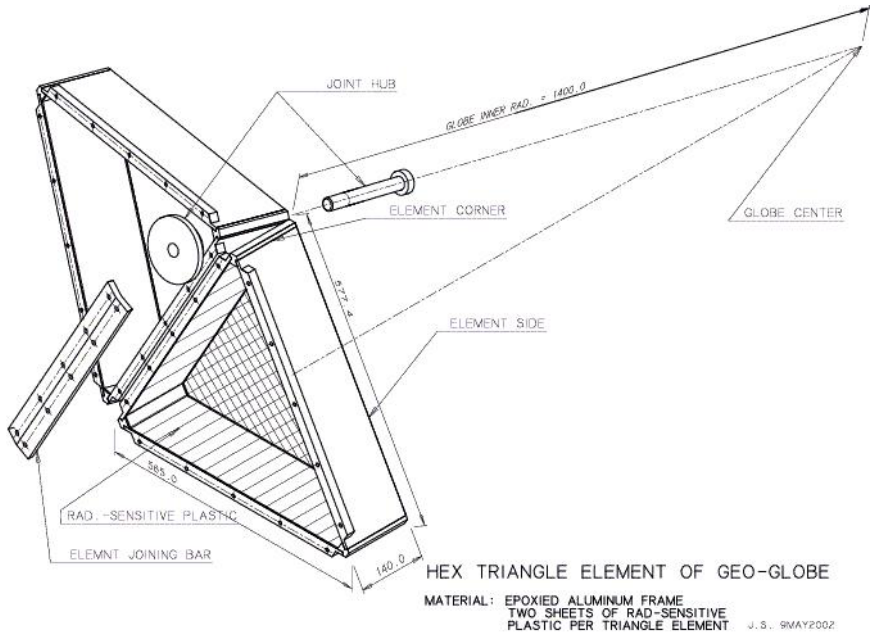

Recent Updates to VELO planning
(Information received on March 20th)

- The VELO designers are proposing (discussion only at present) to premanently mount an crane and on the ceiling above the VELO, which are used to lift one detector half from one side of the vacuum vessel to the other side and to manipulate other heavy components
- Also there will be protecting covers around the vacuum vessel and vacuum system (drawings dated February 14th 2004). We will have to take account of any extra material here and the size of the cover
- We must be able to clear completely the space in the cave around the VELO within an hour, including anything attached to the side walls, as the space will be needed to remove a VELO detector half from the vacuum vessel. This is consistent with the design aims of the MOEDAL detector
- Plan to meet with the VELO engineers asap to discuss these developments

The VELO Crane Proposal (drawings for discussion only)

VELO crane track proposal

Preferred MOEDAL cane mounting

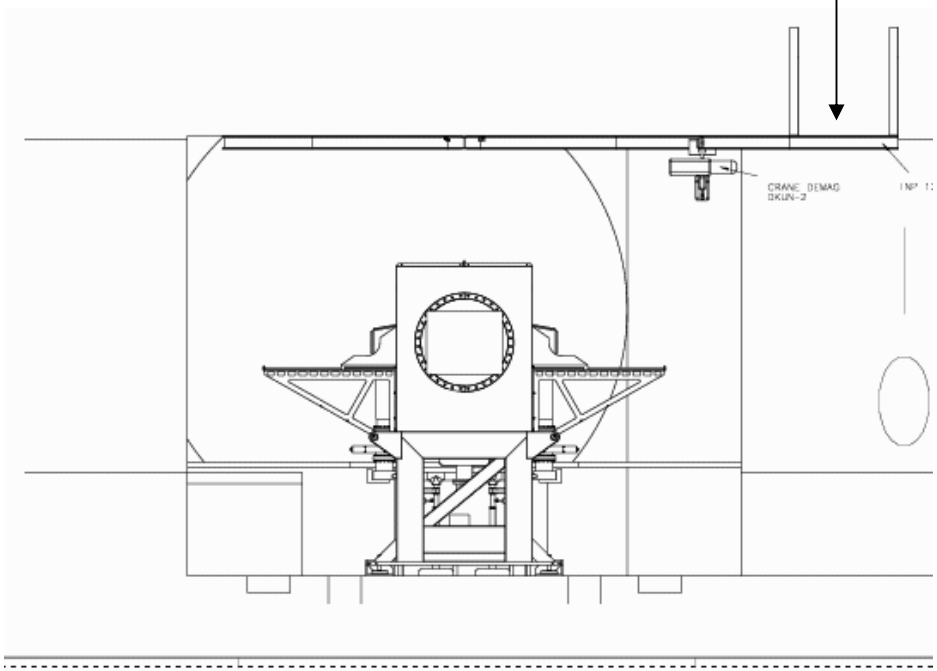

Front of VELO

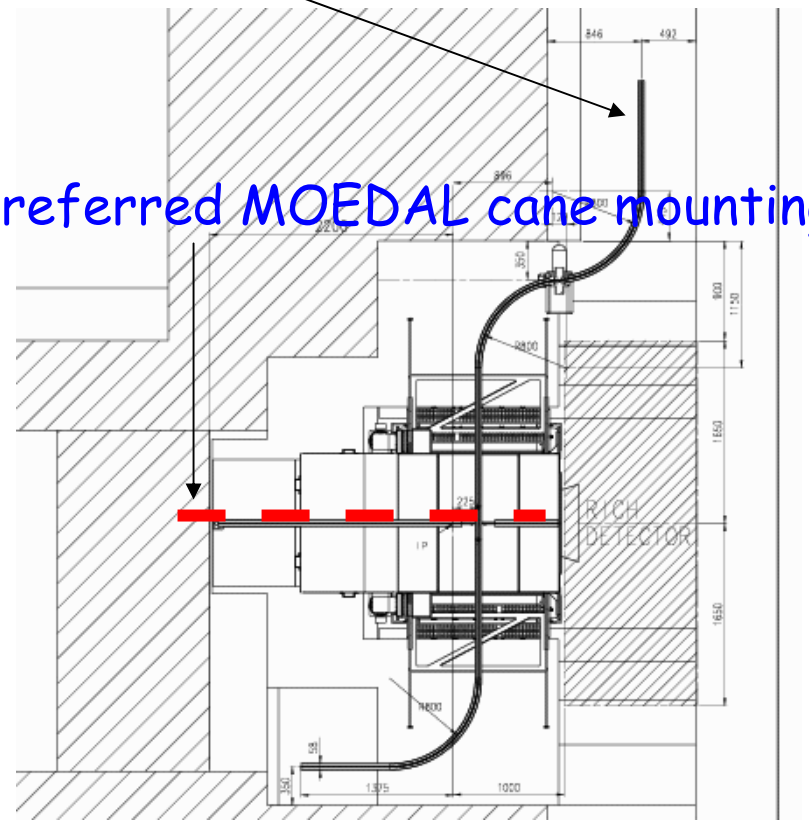

VELO region from above

The VELO "Dust Cover"

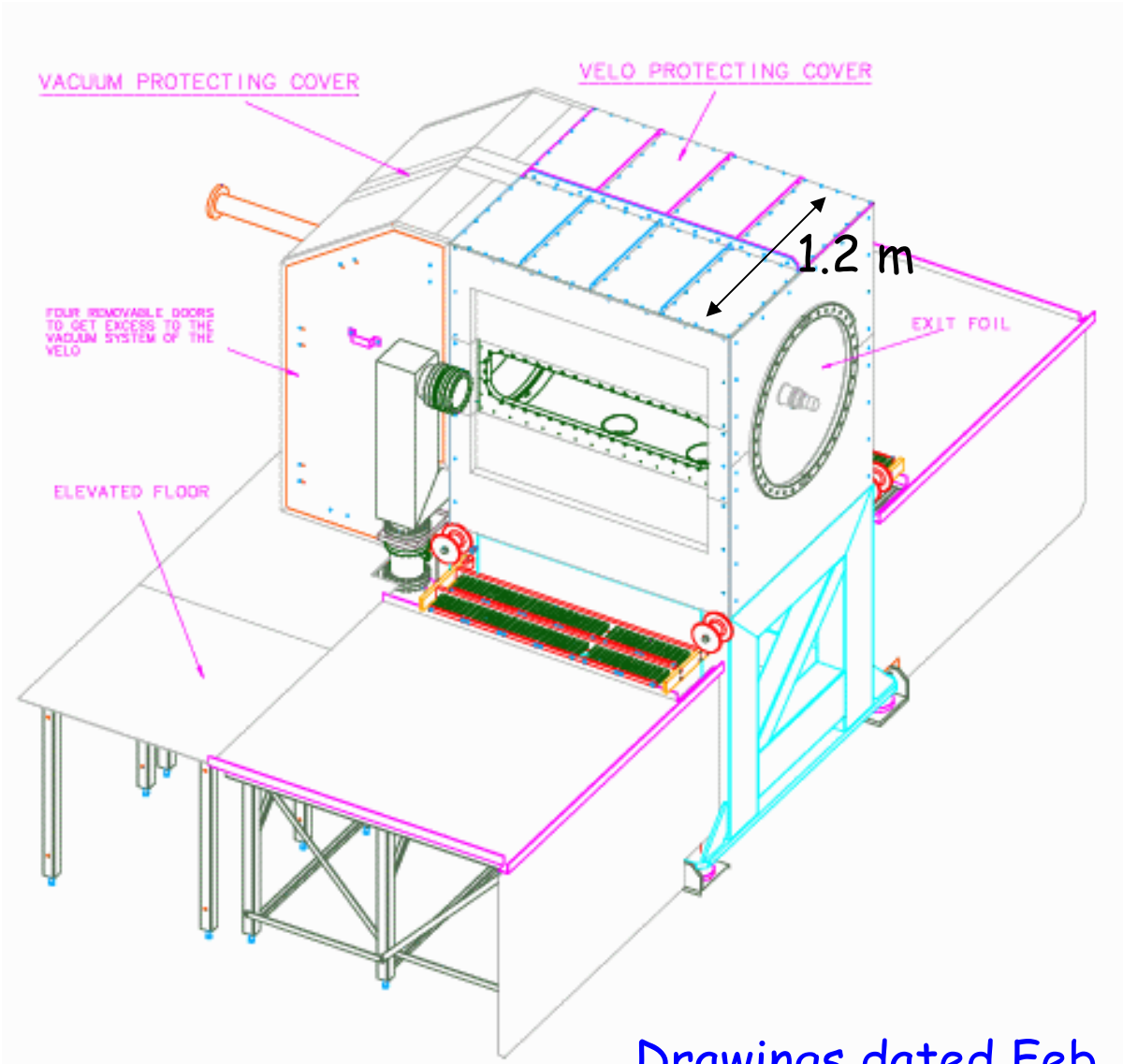

Drawings dated Feb. 14th 2004

Detecting $g \geq 2$ monopoles

- The g=2,3…n monopoles ionize 4,9…n^2 more than g=1 monopoles. Thus the sensitivity for higher magnetic charge monopoles in MOEDAL is much reduced
- Glass track etch detectors are sensitive enough to detect $g \geq 2$ monopoles when placed WITHIN the VELO vacuum vessel
- Unlike plastic track-etch detectors glass detectors (eg UG-5) do not require oxygen
- <u>In fact UG-5 detectors have been successfully used in a vacuum at Tristan and Fermilab</u>
- The high radiation tolerance – up to 1000 Mrad means that it could be deployed at say > 10 cm from the beam without replacement for an indefinite period.
- However we need to discuss, with the LHCb collaboration, the possibility of deploying such detectors within the VELO vacuum chamber

Placing the Glass Detectors

- A proposal: situate UG-5 glass at "away-side" of the vacuum vessel

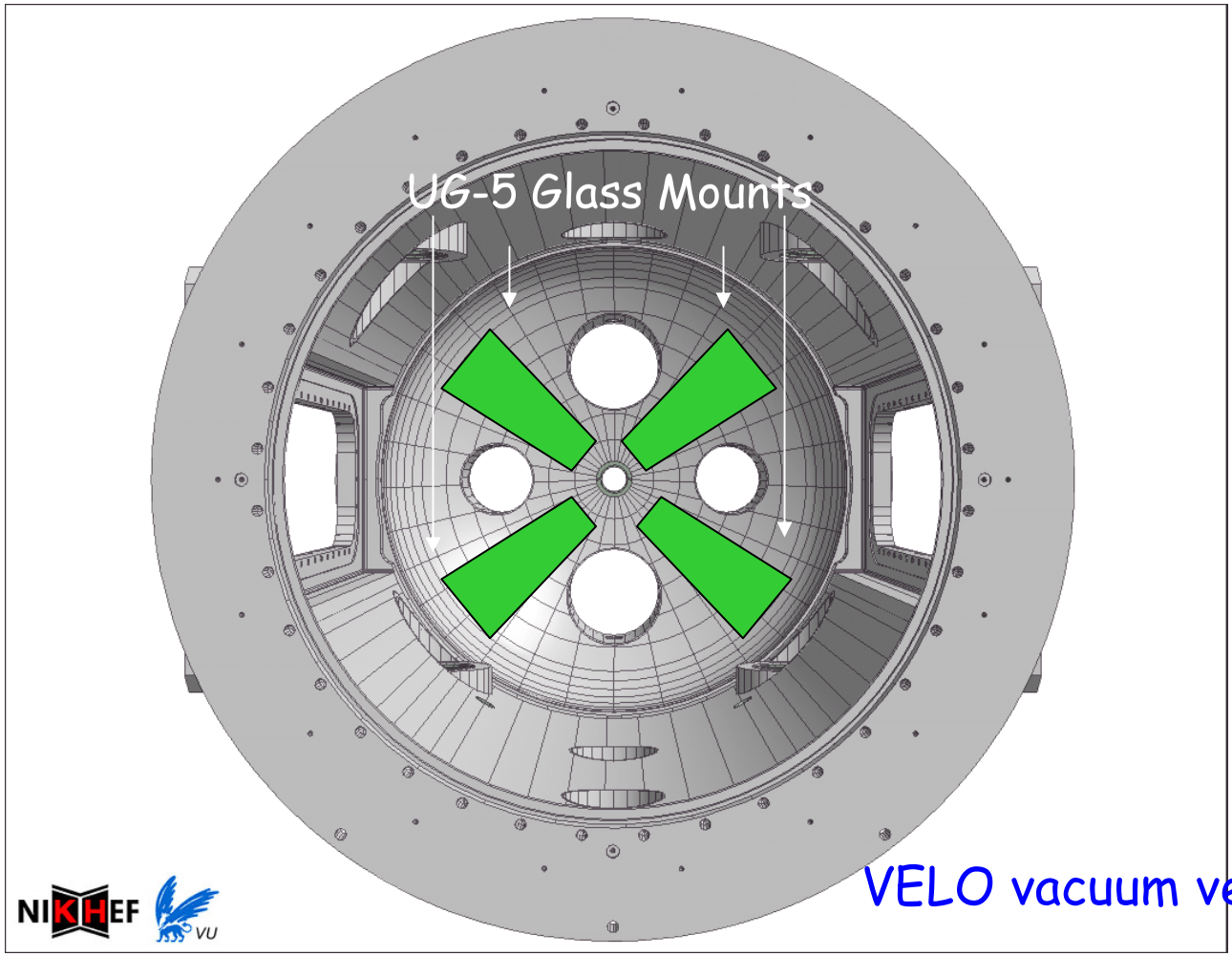

Monitoring MOEDAL Performance

- We have devised a procedure to check that the experiment is working – particularly in the high radiation environments of the LHC
- We propose to irradiate small areas of the CR39 detectors with ions prior to deployment.
- For example we would use:
  - Relativistic Fe ions for CR-39 (Z/β ~30)
  - Gold ions for Rodyne/lexan (Z/β ~90)
- Only if these "fake" monopole tracks in individual sheets give detectable holes with the "ammonia technique" after etching will the detector be deemed to be working.

Towards the Technical Proposal

1. Work with LHCb/VELO group and CERN TIS group to finalize design of MOEDAL detector (in progress). Particular comcerns are:
   A. Safety (access for fire control, flammability, etc.)
   B. Quick and easy access to the VELO region for maintenance, repair and upgrades – we need to coordinate with current LHCb plans for crane access in the VELO region since MOEDAL needs to attach to the roof.
   C. Quick and easy replacement of plastic detector (we plan to be able to completely change the detector in 8 hours
2. We will have to update our material inventory to include VELO cover (in progress)
3. Build a hemisphere prototype of final MOEDAL frame and deploy it at the existing LHCb vertex region model (in progress)
4. Finalize picture of the sensitivity of detectors to radiation in the LHCb region using GEANT4 equipped to study spallation products (in progress)
5. Perform detailed MC studies, using existing program and latest material distribution, of monopole acceptance (in progress) now that we have detailed map of material around the LHCb IP is available)
6. Work with LHCb to refine or abandon plans for UG-5 detectors within the VELO vacuum tank (discussions to begin).
7. *Produce first version of the MOEDAL TP by the end of the 2004 (contingent on 1-5).*