IN SEARCH OF THE SUPERMASSIVE MAGNETIC MONOPOLE

Donald E. GROOM

Department of Physics, University of Utah, Salt Lake City, Utah 84112, U.S.A.

NORTH-HOLLAND–AMSTERDAM

PHYSICS REPORTS (Review Section of Physics Letters) 140, No. 6 (1986) 323–373. North-Holland, Amsterdam

IN SEARCH OF THE SUPERMASSIVE MAGNETIC MONOPOLE*

Donald E. GROOM†

Department of Physics, University of Utah, Salt Lake City, Utah 84112, U.S.A.

Received February 1986

"*. . . it is not certain that nobody has ever seen one. What seems certain is that nobody has ever seen two.*" – John Preskill, Ann. Rev. Nucl. Part. Sci. (1984)

"*. . . don't topologize.*" – Martin Gardner, Scientific American

Contents:

Introduction 325
1. Monopoles 326
2. Astrophysics 327
2.1. Velocities of massive monopoles 327
2.2. Field survival arguments 328
2.3. Monopole mass limits 331
2.4. Limits based on mass density 332
2.5. Escapes from field survival and average density limits 333
2.6. Other limits based upon field survival 333
2.7. Monopole-antimonopole annihilation 334
2.8. Limits based upon nucleon decay catalysis 334
2.9. Conclusions concerning the astrophysics of massive monopoles 337
3. Superconducting induction experiments 338
4. Ionization and/or excitation by slow monopoles 347
4.1. Energy loss to electrons via the induced electric field 348
4.2. Atomic induction 350
5. Track-etch experiments 355
6. Scintillator experiments 357
7. Proportional wire chamber experiments 362
8. The MACRO detector 364
9. Terrestrial limits based upon nucleon decay catalysis 366
10. Conclusions 368
Acknowledgements 369
References 369

Abstract:

During the past three years there has been an intense search for slow, massive magnetic monopoles, presumed to be the oldest observable relics of creation. There is little theoretical guidance as to their expected flux, although such particles are mandatory in a large class of grand unified theories. We review experimental constraints. Superconducting induction experiments provide the most direct upper limit, $1.5 \times 10^{-2}\,\mathrm{cm}^{-2}\,\mathrm{sr}^{-1}\,\mathrm{s}^{-1}$ at

* Supported in part by National Science Foundation (U.S.A.) Grants AST80-10727, PHY83-08135, and PHY83-12626.
† Present address: SSC Central Design Group, LBL Mail Stop 90–4040, Berkeley, CA 94720, U.S.A.

Single orders for this issue

PHYSICS REPORTS (Review Section of Physics Letters) 140, No. 6 (1986) 323–384.

Copies of this issue may be obtained at the price given below. All orders should be sent directly to the Publisher. Orders must be accompanied by check.

Single issue price Dfl. 35.00, postage included.

0 370-1573/86/$17.85 © Elsevier Science Publishers B.V. (North-Holland Physics Publishing Division)

the 90% confidence level, independently of velocity. A Russian group using a large scintillation counter array reports $F \lesssim 2 \times 10^{-15}$ cm^{-2} sr^{-1} s^{-1} for monopoles with velocities as low as $10^{-3}c$, the local virial velocity in the galaxy. A search for tracks in ancient muscovite mica establishes a limit near 10^{-19} cm^{-2} sr^{-1} s^{-1} at this velocity, albeit with some interpretative problems. These terrestrial bounds are to be compared with the Parker limit at $\sim 10^{-15}$ cm^{-2} sr^{-1} s^{-1} (over most of the expected mass range), a bound at 10^{-19} cm^{-2} sr^{-1} s^{-1} if magnetic fields survive in clusters of galaxies, and with several limits based upon neutron star observations—$\sim 10^{-22}$ cm^{-2} sr^{-1} s^{-1} if nucleon decay is or is not catalyzed by monopoles. New induction, scintillation, and proportional wire chamber experiments are in their late construction stages, and a very large array of He–n-pentane streamer chambers, track etch detectors, and scintillators has been proposed. This active and exciting field would be even further stimulated by the discovery of monopoles.

Introduction

The magnetic monopole is the most venerable member of the mythological bestiary of physics. Formally permitted by Maxwell's equations but somehow ignored by most 19th century physicists, it received renewed vigor with Dirac's 1931 study of its physiology [1]. Among other things, he noted that the existence of an isolated monopole was consistent with an electron's having a single-valued wave function only if the monopole's charge g was $ne/2\alpha$, where n is an integer we will usually take as unity and α ($e^2/\hbar c \approx 1/137$) is the fine structure constant. Since the quantization involves the electric charge, the quantization of electric charge also follows if even one monopole exists. Searches in expected habitats over the years have all proven futile [2, 3].

However, two recent developments have stimulated intense activity. The first was theoretical: "Grand unified theories" (GUTs) have appeared, which attempt to unify the electroweak and strong interactions. These involve some semisimple group (SU(5), SO(10), etc.) whose symmetry is badly broken in our present world. Since it *must* contain the electroweak theory and hence an explicit U(1) factor, topological defects which appear as magnetic monopoles must of necessity exist [4, 5]. We know of nowhere in the present universe that objects of such large mass ($\gtrsim 10^{15}$ GeV/c^2) could be produced, but cosmic rays should include these ancient relics of creation.

Secondly, B. Cabrera's careful and sensitive search with a superconducting induction loop turned up a credible and certainly interesting monopole candidate event, which, if genuine, implied a very large flux [6]. In the early months following Cabrera's observation, there appeared a host of "opportunistic" experiments and theoretical papers. It gradually became clear that no easy discoveries were to be made, and by now the field has reverted to those willing to do long and difficult work, with improved null results as the most likely outcome.

The search has stimulated the very best in physicist's ingenuity. Theorists have imagined monopoles bobbing on the surface of a neuton star's superconducting core, as they slowly migrate from one magnetic pole to another [7], while experimentalists have looked for tracks recorded in mica before their ancestors left the oceans [8]. It is only regrettable that there is no evidence for monopoles.

The emphasis of this review is upon experiment, in part because of the reviewer's interests but in part because theory has been so well treated in Preskill's recent review [9]. "Experiment" is interpreted broadly: *Any* experiment involves some chain of deduction between data and conclusions. In the case of a superconducting induction experiment the chain is very short, because there is little doubt that a monopole will produce a signal. The number of links is larger (with increased chances for a weak one) in the case of Price's search in ancient mica, and larger still in e.g. Rephaeli and Turner's arguments concerning magnetic field survival in clusters of galaxies [10]. However, even flux limits based upon nucleon decay catalysis in neutron stars are still "experiments", because they are ultimately based upon measured data.

Some of the limits are mutually exclusive: If catalysis exists, then limits based upon field survival in stellar objects or upon the formation of monopole-nucleus bound states are not correct. If monopoles going through rock capture nuclei, as Price must assume to obtain his mica limits, then most monopoles cannot arrive at a detector by coming through the earth, and all of the quoted limits for induction and electronic detectors are off by a factor of two. We make little attempt at complete consistency in this regard, since it seems better to make minimal assumptions in interpreting each class of experiments.

Two sets of conference proceedings, Magnetic Monopoles [11] and Monopole 83 [12], are often cited in the following pages. These proceedings also contain a number of useful mini-reviews which have not been cited explicitly. The proceedings of the 1981 Trieste conference on the subject provides additional theoretical detail [13]. A useful counterpoint to this paper is provided by Giacomelli's thorough and recent review [14]. Carrigan and Trower have published a very nice succinct review of the subject in Nature [15], while their Scientific American provides a more popular introduction [16].

1. Monopoles

The monopole as the source of magnetic charge in Maxwell's equations was a rather simple object, or at least so it might have appeared as soon as one forgot his preconceptions about axial and polar vectors.* If we reverse our usual pictures of E and B, we see that an induced azimuthal electric field would be observed around a monopole with charge g travelling with velocity v, with magnitude

$$E = \frac{vgb}{c(b^2 + v^2t^2)^{3/2}}$$

where the impact parameter b is reached at time $t = 0$. The direction is "out of the paper", i.e., perpendicular to both the velocity and radius vector, just as in the case of an induced B field. As the monopole goes by, an electron a distance b from its path receives an azimuthal impulse Δp which is easily shown to be $2eg/cb$, or an angular momentum impulse $\Delta L = b\Delta p = 2eg/c$. If we insist that $\Delta L = n\hbar$, we then obtain the Dirac condition $g = ne/2\alpha$ [17].

A very much more complicated (and interesting) monopole follows from the work of 't Hooft [4] and Polyakov [5], who showed that magnetic monopoles are a necessary consequence of a very general class of theories, among which are included all GUTs. Under the simplest of assumptions (no intermediate mass scales, or the "desert hypothesis") the monopole's mass should be about M_x/α_x, where M_x is the unification mass ($\approx 10^{14}$ GeV/c^2) and $\alpha_x \approx 1/40$ is the fine-structure constant evaluated at the unification mass. The object can apparently bind a proton or heavier nucleus [18], or might possess an intrinsic electronic charge [19]. Since the gauge fields near its core probably violate baryon conservation, a nucleon in close proximity might decay [20–22]. Finally, it might carry any multiple of the minimal Dirac charge, although our implicit assumption will be that the charge is $g/2\alpha$.

Presumably about one monopole per event horizon was produced in connection with the breaking of the GUT symmetry in the early universe [23]. Much later, at about 10^{-6} s, nucleons condensed. If the expansion proceeded in the conventional way between these epochs, we should expect about one

* The symmetry introduced into Maxwell's equations is less pleasing in four-dimensional notation, since the magnetic current is a totally antisymmetric third-rank tensor. One can recover a normal-looking 4-vector current by making a duality transformation, but only at the expense of converting the electric 4-current into such an object.

monopole per nucleon. It is possible that 90% of the mass of the universe is contributed by monopoles, but not all but a part in 10^{15}! A way out of this theoretical dilemma (and several others) has apparently come with the discovery of inflation by A.H. Guth [24]. In connection with the phase change from the symmetry of the GUT epoch to the broken GUT symmetry of the next, the radius of the universe (the scale factor in the Robertson–Walker metric) increased exponentially before resuming normal expansion. In this case our present information horizon may not yet have reached the size of the "bubble" containing "our" monopole. Theoretical estimates of monopole abundance thus differ by a factor of 10^{80}.

2. Astrophysics

The enormous electric fields which characterize atomic systems do not occur macroscopically because they are "shorted out": Free electric charges are always available to cancel them. For example, although a black hole might in principle possess an electric charge, it is unlikely to maintain such a charge because it would selectively attract protons or electrons until it were neutral. Even in the few places where large electric fields probably occur (such as near rotating neutron stars), the fields are produced and maintained by moving magnetic fields. On the other hand, magnetic fields exist on the scale of galaxies and perhaps even on the scale of galactic clusters. It follows just from the existence of these fields that there is not a copious supply of magnetic charges.* The limits actually set by these considerations in a variety of circumstances derive from the argument, originally made by E.N. Parker, that the survival of galactic fields implies an upper limit to the monopole number density [25, 26]. In the wake of recent developments his arguments have been reexamined and extended, and exceptions to the "Parker bound" have been sought.

While not infallible, field survival arguments are sufficiently compelling that they must be taken seriously by anyone planning new experiments. In this spirit, we review them with some care.

Limits can also be set using the known luminosity (or luminosity limits) of objects ranging from planets to exotic stars. If monopoles exist, such object will have been accumulating them for a long time. Either monopole–antimonopole annihilation or monopole–catalyzed nucleon decay would produce excessive luminosity if the monopole flux were too high. Limits calculated assuming decay catalysis in neutron stars are among the most stringent yet found, but only with assumptions as to the existence and rate of the process.

2.1. Velocities of massive monopoles

Left to itself, a relic monopole gas would now have cooled to $\sim 10^{-5}$ mK, so that, for monopole masses greater than $1\,\mathrm{GeV}/c^2$ or so, kinetic velocities would be less than $10^{-21}c$. Obviously, such monopoles would have been accelerated by gravitational and magnetic forces, and they might have become gravitationally bound in a number of ways. Possible present habitats can be characterized by their velocities:

1. *Not gravitationally bound to our galaxy or supercluster:* Monopoles roaming between galaxies will arrive at earth with at least escape velocity from our position in the galaxy, or just over $10^{-3}c$ (depending upon the mass of the "dark halo"). They very likely will have been magnetically accelerated to much higher velocities.

* An exception results from the rather contrived possibility that the magnetic charges are themselves the source of the galactic fields, as will be discussed later.

2. *Bound to the galaxy or local supercluster:* $v \approx 10^{-3}c$. Circular velocity at the sun's distance from the galactic center is about 80% of escape velocity from the galaxy (again depending upon the mass of the "dark halo"), which in turn is just below supercluster escape velocity. Within the accidents of the vector addition of the sun's velocity to that of the monopole, such "galactic monopoles" will thus penetrate terrestrial apparatus at a velocity very close to $10^{-3}c$. This theoretically attractive possibility is also appealing experimentally, since it provides the lowest velocity (again within a factor of two or so) at which a monopole's electromagnetic interaction in commonly used detector materials would incontrovertibly produce signals.

3. *Bound to the sun and other stellar systems:* $v \approx 10^{-4}c$ for terrestrial observations. Since the field survival arguments which set flux limits in the above two cases are not applicable here, and since such a monopole might not produce a signal in a proportional counter or scintillator, this idea was appealing–except for the lack of a credible capture mechanism. Initial argument not withstanding [27], it now appears that no sensible local density enhancement over the galactic halo case (above) would be expected [28].

4. *Bound to planets such as the earth:* $v < 4 \times 10^{-5}c$ at the earth's surface. A capture mechanism is even harder to understand here than in the stellar case. Carrigan [29] has set limits under this scenario based on monopole–antimonopole heating of the earth, and M.S. Turner [30] has set even more stringent limits by invoking heating from nucleon decay catalysis. As will be seen, such slow monopoles would actually stop in the earth if their masses were less than about 10^{16} GeV/c^2, so that (a) the swarm around the earth would need continual replacement, and (b) searches in old iron ore, etc. [31, 32] might be promising.

2.2. Field survival arguments

Since the reality of Cabrera's 1982 monopole candidate would imply a monopole flux incompatible with the "Parker bound", the field survival limits have recently been reexamined in detail by Turner, Parker and Bogden (TPB) [33], and by others [34].

Interstellar fields of 2–5 μG have been measured [35]. Although the field structure is fairly chaotic, there is a rough tendency of lines to follow the spiral structure; indeed, differential rotation of the galaxy "stretches" them in this direction and creates new field. The regeneration time via this mechanism is thus about the galactic rotation period, or 2×10^8 yr. Fields which are coherent over large distances have a maximal effect on monopoles (and conversely). TPB consider the most favorable case for large monopole flux which is consistent with the data [36] – fields which are coherent over small "domain" sizes of $l \approx 300$ pc but which are otherwise random.

A monopole entering such a domain with negligible velocity will leave with kinetic energy $\frac{1}{2}Mv_{\mathrm{mag}}^2 = gBl$, or velocity $v_{\mathrm{mag}} = (2gBl/M)^{1/2}$. Following an increasingly common convention, we scale all variables by their fiducial values. For example, l_{21} means l as measured in units of 10^{21} cm, or 300 pc. Taking g as the Dirac monopole charge, B in units of 3 μG, and the monopole mass in units of 10^{19} GeV/c^2, we find*

$$v_{\mathrm{mag}} \approx 10^{-4}c(l_{21}B_3/M_{19})^{1/2} .$$

A monopole entering a sequence of domains with velocity $|\boldsymbol{v}| \gg v_{\mathrm{mag}}$ will gain or lose longitudinal velocity (averaging to zero over many domains) but will also receive transverse "bumps" which will

* In the appropriate units, g $(=e/2\alpha) = 20\,600$ eV G^{-1} cm^{-1}.

systematically increase its energy. In particular, as it crosses one domain the monopole's energy will increase by

$$\Delta E = \tfrac{1}{2}M(\boldsymbol{v} + \boldsymbol{\Delta v})^2 - \tfrac{1}{2}Mv^2 = M\boldsymbol{v}\cdot\boldsymbol{\Delta v} + \tfrac{1}{2}M(\Delta v)^2 .$$

The dot product will average to zero after many differently oriented domains are crossed, while the last term is always positive, resulting in the monopole's slowly gaining energy at the expense of the magnetic field. Since the monopole experiences an acceleration gB/M for the time l/v it spends crossing the domain, $\Delta v = gBl/Mv$, and the average energy increment is

$$\Delta E = 2\times 10^{17}\ \mathrm{eV}(10^{-3}c/v)^2 B_3^2 l_{21}^2/M_{19} .$$

If the flux of monopoles with velocity v is F (in $\mathrm{cm}^{-2}\,\mathrm{sr}^{-1}\,\mathrm{s}^{-1}$), then $\pi l^2 F\,\mathrm{d}\Omega$ enter a spherical region with radius l in angular region $\mathrm{d}\Omega$ in unit time. Over the entire solid angle $(4\pi)(\pi l^2)F$ enter (and leave) per unit time, and each takes away ΔE. If the entire magnetic field energy in the volume $(\approx(B^2/4\pi)(\frac{4}{3}\pi l^3))$ is drained no faster than a regeneration time t_{15} (expressed in units of 10^{15} s = 30 Myr), then

$$F \lesssim 10^{-13}\ \mathrm{cm}^{-2}\,\mathrm{sr}^{-1}\,\mathrm{s}^{-1} M_{19}(v/10^{-3}c)^2 l_{21}^{-1} t_{15}^{-1} .$$

The B dependence has cancelled.

The only real assumption here is that $v \gg v_{\mathrm{mag}}$. The monopoles might be gravitationally bound to the galaxy (habitat 2, above), or just passing through (habitat 1). The above flux limit is shown as function of mass by the upward-going part of the heavy solid curve in fig. 1. A reference velocity $10^{-3}c$ has been chosen because of the arguments of the last section: Monopoles "falling into the galaxy" have at least this velocity, and it is also close to the virial velocity of a gravitationally bound monopole. Higher velocities would result in less restrictive flux limits, but would guarantee monopoles belonging to an intergalactic population. As we shall see, cosmological density limits then restrict the permissible flux.

In this discussion we have so far assumed $v \gg v_{\mathrm{mag}}$. For a sufficiently low-mass monopole v_{mag} can be quite large, and the analysis fails. In this case, an infalling monopole finds itself accelerated to v_{mag} in the first domain it enters, after which it travels from domain to domain until it escapes. Each time it gains or loses energy $\Delta E = gBl$, so after traversing n domains it has on the average extracted $\sqrt{n}\,\Delta E$. TPB take $n \approx 30\,\mathrm{kpc}/300\,\mathrm{pc} \approx 100$, so that with $r = r_{23}10^{23}$ cm the average monopole extracts about 6×10^{21} eV $B_3(l_{21}r_{23})^{1/2}$ in traversing the galaxy. Relating this energy extraction per monopole to the flux as above, except that the volume is now $\frac{4}{3}\pi r^3$, we obtain $F \lesssim 10^{-15}\ \mathrm{cm}^{-2}\,\mathrm{sr}^{-1}\,\mathrm{s}^{-1}\ B(r_{23}/l_{21})^{1/2} t_{15}^{-1}$. This time there is no mass dependence, and we obtain the horizontal part of the field-survival curve shown in fig. 1 – the often-quoted $10^{-15}\ \mathrm{cm}^{-2}\,\mathrm{sr}^{-1}\,\mathrm{s}^{-1}$ flux limit.

The cross-over between the horizontal and sloping parts of the field survival curve occurs when monopoles enter the galaxy with $v = v_{\mathrm{mag}}$. With $v = 10^{-3}c$ and the other parameters (domain size and magnetic field strength) at their nominal values, the change comes at 10^{17} GeV/c^2.

TPB have been careful to choose parameters which will lead to the least restrictive possible flux bounds, as is appropriate for their analysis. Galactic fields are probably coherent over larger distances than 10^{21} cm, but their choices allow a higher flux limit if $v \gg v_{\mathrm{mag}}$. In the present case it does the opposite, although the dependence is weaker. However, their choice of $r = 10^{23}$ cm compensates: This is about the radius of the galactic disk, and so its use implies domains with B fields lying in the plane, or else

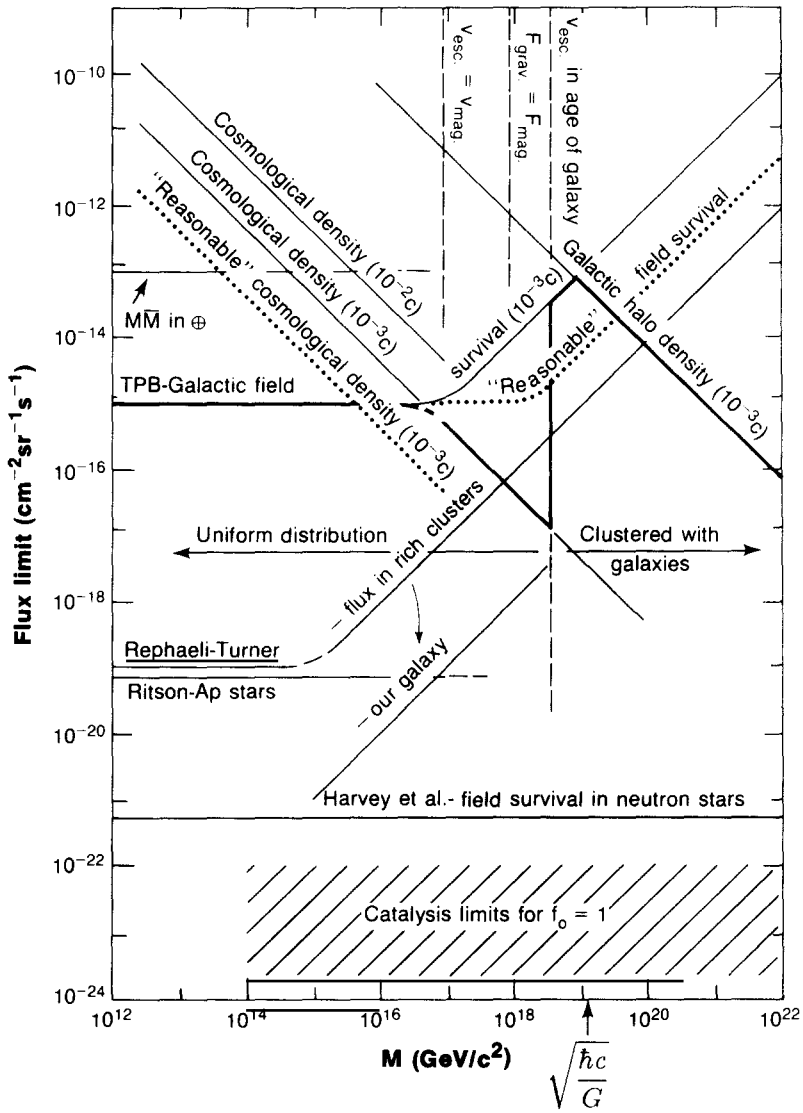

Fig. 1. Astrophysical limits on the monopole flux. The net optimistic upper limit as a function of monopole mass, set by density and galactic field survival considerations, is indicated by the heavy line. The dotted lines indicate limits obtained with our "reasonable" set of parameters, as given in table 1. "$M\bar{M}$ in ⊕" refers to Carrigan's limit based upon terrestrial heating based upon annihilation [29]. The catalysis bounds and the Harvey et al. limit are exclusive.

with B fields of similar strength and size filling a galactic halo. The combined evidence from cosmic ray age [37] and cosmic ray isotropy [38] indicates that fields lie in the galactic plane for only a few disk thickness ($l_{21} \approx 1$), so that again the flux limit conservatively errs on the high side.

TPB's galactic "Parker bound" at 10^{-15} cm^{-2} sr^{-1} s^{-1} has become so widely accepted that it is useful to re-calculate it, using "reasonable" rather than conservative values for the parameters. Our choices are given in table 1, along with those used by TPB, and the resulting limits are shown by the dotted curve in fig. 1. The changes make surprisingly little difference. In particular, for $v \ll v_{mag}$ (the low-mass case), our

Table 1
Parameters used in fig. 1

Parameter	TPB	"Reasonable"
Field coherence length	300 pc	1000 pc
Average magnetic field strength	3 μG	3 μG
Field regeneration time	30 Myr	200 Myr
Number of galactic domains crossed by a "slow" monopole	100	2(?)
Hubble constant	100 km s^{-1} Mpc^{-1}	60 km s^{-1} Mpc^{-1}
$\frac{\text{Monopole density}}{\text{Closure density}} = \Omega_M$	2	0.5

decrease in the number of randomly crossed domains and increase in the field regeneration time cancel, resulting once again in the limit at 10^{-15} cm^{-2} sr^{-1} s^{-1}.

Rephaeli and Turner [10] have obtained a much more restrictive field-survival flux limit by applying the same arguments to the intragalactic fields of clusters of galaxies. The evidence for fields of 0.01 μG to 1 μG comes from diffuse radio emission from rich clusters [39]. Such fields would hardly be surprising, since it would be difficult to understand how hot intracluster gas of probable galactic origin could have failed to carry galactic fields with it into the space between galaxies. The regeneration timescale would be the timescale of galactic origin, or $\gtrsim 10^9$ yr. Taking the typical field coherence length l as 10 kpc (a galactic size), Rephaeli and Turner re-apply the TPB arguments given above to find a flux limit two orders of magnitude smaller than in the galactic case for $v \gg v_{mag}$. If v is smaller than v_{mag}, then the monopoles are not bound to the clusters and by the previous arguments we obtain $F < 2 \times 10^{-19}$ cm^{-2} sr^{-1} s^{-1} for $r = 300$ kpc. Both of these limits are for the flux in the rich clusters themselves. Since the matter density (and, by inference, the monopole density) is an order of magnitude greater in a rich cluster than in the neighborhood of our own galaxy, they also argue that the flux of monopoles which can be gravitationally bound to rich clusters ($M \geq 10^{15}$ GeV/c^2) but not to our own galaxy ($M \leq 10^{19}$ GeV/c^2) should be restricted by another two orders of magnitude. Both curves are shown in fig. 1. However, as the authors warn, this improvement over the galactic field survival bounds must be treated with caution until the existence of the intracluster fields is better established.

2.3. Monopole mass limits

Given the mass dependence in several of the above expressions, it is evident that a number of mass limits can be obtained for monopoles bound to the galaxy:

1. They will remain bound only if the gravitational force they experience exceeds the magnetic force, or $Mv_{circ}^2/r > gB$. For $v_{circ} = 300$ km s^{-1} and $r = 10$ kpc, the monopole's mass must exceed $B_3 \times 10^{18}$ GeV/c^2 for this to occur.

2. They must not gain escape velocity in crossing one domain, i.e. v_{mag} must be less than v_{esc}. It follows that

$$M \gtrsim (10^{-3} c/v_{esc}) l_{21} B_3 \times 10^{17} \text{ GeV}/c^2 .$$

3. They must not acquire escape velocity in less than the age of the galaxy. If $\frac{1}{2}M(\Delta v)^2$ is acquired in the time l/v required to cross a domain, and in time $t = t_{10} \times 10^{10}$ yr the monopole should increase its

energy by less than $\frac{1}{2}Mv_{esc}^2$, then

$$M \gtrsim (10^{-3}c/v_{esc})^{3/2} l_{21}^{1/2} B_3 t_{10}^{1/2} \times 0.6 \times 10^{19}\ \mathrm{GeV}/c^2 .$$

For $v_{esc} = \sqrt{2} \times 10^{-3}c$, the mass must exceed 4×10^{18} GeV/c^2.

These limits are shown by the vertical dashed lines in fig. 1. The highest limit, just below 10^{19} GeV/c^2, marks the boundary between our habitats 1 and 2. It is remarkable that the nearly unrelated estimates are so close, especially given the arbitrariness of the input parameters. Moreover, they are all fairly high compared with the 10^{15} GeV/c^2 or so "expected" for a GUT monopole.

Similarly, monopoles with masses $\gtrsim 10^{15}$ GeV/c^2 can cluster with rich clusters of galaxies.

2.4. Limits based on mass density

The average mass-energy density in the universe may be written as $\Omega\rho_c$, where the critical density ρ_c is

$$\rho_c = 3H_0^2/8\pi G = 1.9 \times 10^{-29}\ \mathrm{g\,cm^{-3}}\ h^2 ,$$

with the scaled Hubble constant h defined as $H_0/(100\ \mathrm{km\,s^{-1}\,Mpc^{-1}})$. Most experimental values for h now lie between 0.5 and 1.0. The fraction of the density due to nuclear matter is thought to lie between 0.014 and 0.14 [40]. Experimental determination of Ω depends upon dynamic observations on ever-increasing distance scales. Although it once seemed that Ω was larger than could be accounted for by nuclear matter, recent values have tended to be lower. Limits as low as 0.06 and as high as 0.6 are reported by various authors [40], although some feel that $\Omega = 1$ cannot be excluded [41]. In addition, a value of precisely unity is predicted by most "new inflationary" theories, and such models are at present very attractive. Could some or all of the non-nucleonic "dark matter" needed to reach closure density ($\Omega = 1$) be monopoles?

If monopoles with velocity v and number density N move in random directions, the flux F is $Nv/4\pi$. We may then write

$$F = 2.5 \times 10^{-18}\ \mathrm{cm^{-2}\,sr^{-1}\,s^{-1}}\ h^2\Omega_M(v/10^{-3}c)M_{19}^{-1} ,$$

where Ω_M is the monopole contribution to Ω. This flux is shown in fig. 1, using TPB's value $\Omega_M = 2$ and $h = 1$. A dotted line has been added for our "reasonable" values $\Omega_M = 0.5$ and $h = 0.6$ ($h^2\Omega_M = 0.2$).

Turner has recently pointed out that $h^2\Omega$ is better known than either Ω or h [42]. Under very reasonable assumptions,* $h^2\Omega \leq 1$. Even so, $h^2\Omega$ reaches unity only for $\Omega > 6$. TPB used $h^2\Omega_M = 2$, so this limit occurs somewhere between the dotted and solid "cosmological density" lines for $v = 10^{-3}c$ in fig. 1.

These limits are the most restrictive between $\sim 10^{16}$ GeV/c^2 and $\sim 10^{19}$ GeV/c^2, above which monopoles can be bound to galaxies and the argument is no longer relevant. Curiously, they supersede field survival limits over most of the region where $v > v_{mag}$.

But what if the monopoles are bound to the galaxy? The dynamical data concerning mass density are adequately described by saying (a) in the halo, the mass interior to radius r is proportional to r, and (b) a mass of 10^{11} solar masses is interior to the solar location at 10 kpc. Together, these statements imply a local density of 6×10^{-25}g cm^{-3}, or 3×10^4 times the cosmological density for $h = 1$. Some or even most of

* A matter-dominated universe with $\Lambda = 0$, older than 10 Gyr and with $h \geq 0.45$.

this "dark halo" could consist of monopoles. The flux bound implied by this density is labeled "galactic halo" in fig. 1.

The heavy dark curve in fig. 1 represents the combined upper limit for the flux of monopoles which are either gravitationally unbound or bound to the galaxy, on the combined basis of field survival and density limit arguments. They can be bound only if their masses approach 10^{19} GeV/c^2. In this case, field survival arguments (flux limit $\propto M$) and average density arguments (flux limit $\propto M^{-1}$) compete in limiting the flux; for the example shown the halo density limit is the most restrictive over much of the range. Below about 10^{17} GeV/c^2, where v_{mag} is high compared to other interesting velocities, field survival arguments yield the mass-independent limit. Between these masses, cosmological density limits prevail. The least restrictive limit, at about 10^{-13} cm^{-2} sr^{-1} s^{-1}, occurs (by accident) for monopoles with nearly the Planck mass. As implied by the dotted curves, only a particularly fortuitous set of parameters could allow fluxes as high as this particular "Parker bound".

2.5. *Escapes from field survival and average density limits*

But what if it should turn out experimentally that the monopole flux exceeded these limits, as was considered possible in 1982? We have already pointed out that monopoles in our habitats 3 and 4 – bound to stellar or planetary systems – escaped from the above considerations. Instead, the combined difficulties of finding a credible capture mechanism and avoiding a number of indirect flux limits, based on monopole annihilation, nucleon decay catalysis, etc., make these possibilities unlikely.

A short review of the ingenious mechanisms invented to avoid the field survival problem for galactic monopoles has been given by Parker [43]. Most involve specially constructed symmetries, and some, such as that by Arons and Blanford [44], leads to a flux requirement substantially *above* present experimental limits.

Wasserman and his colleagues at Cornell have made a recent foray into the problem [45, 46]. In their model a massive galactic halo is made up of equal numbers of monopoles and antimonopoles, and the disk's azimuthal magnetic field is generated by electric currents in the usual way. For sufficiently high monopole densities, they find that field energy is traded for monopole plasma transverse oscillation energy, with the field oscillating on a timescale less than or comparable to the field regeneration time. The field is eventually drained by the combination of several damping mechanisms, but on a timescale quite long compared to its regeneration time. For low monopole density the field damps over a long time, for basically the same reason as in TPB's model. The cross-over between oscillation and damping occurs when the plasma period is about $\frac{1}{6}$ of the time it takes a halo particle to reach the disk, in agreement with TPB's observation that their limit corresponds to field depletion in the first quarter cycle of a plasma oscillation. In fact, given the small difference between numerical factors chosen by the two groups, the "house roof" part of the curve in the final figure of ref. [46] is exactly as in fig. 1 of TPB! The difference is that the Cornell group believes that a monopole halo can exist *above* the low-mass side of the "roof" if sufficiently coherent oscillations exist. As we shall see, this region is very nearly excluded experimentally in any case.

2.6. *Other limits based upon field survival*

Are there other astrophysical situations in which field survival arguments can provide flux limits? Various kinds of stars with magnetic fields immediately come to mind. As will be discussed in a later section, the energy loss rate of a monopole with velocity v as it passes through ionized gas is of order

$10(v/c)$ GeV g^{-1} cm^{-2}, so that a reasonable fraction of monopoles with $M \lesssim 10^{18}$ GeV/c^2 stop in a stellar radius, more or less independently of the star's mass.

Ritson [47] has applied such arguments to field survival in magnetic A stars, with the conclusion that if (a) the fields are "fossil" (as old as the stars) and (b) the monopoles are light enough to be captured, then the average monopole flux is less than 7×10^{-20} cm^{-2} sr^{-1} s^{-1}.

Field survival in white dwarfs has been analyzed by A.K. Drukier [48].

A very recent analysis [7] of field survival in neutron stars seems to provide the best monopole flux limit yet available, aside from the more conjectural bounds based upon catalyzed nucleon decay. The problem is complicated by the likely existence of a superconducting core in the star, through which its magnetic field threads in quantized flux tubes. Monopoles essentially float on the core, by virtue of the enormous tension in the flux tubes that would connect them with the surface if they sank. However, a monopole near a magnetic pole of the core could affix itself to two existing flux tubes,* and would be pulled quickly through the core by the flux tube tension. It would then spend a comparatively long time (hours) migrating on the surface of the core to the other pole, where it would start over. Harvey et al. find

$$F \lesssim 5 \times 10^{-24}\left(\frac{R_*}{15\,\mathrm{km}}\right)\left(\frac{10^{10}\,\mathrm{yr}}{\tau_*}\right)^2\left(\frac{1.4M_\odot}{M_*}\right)\left(\frac{v_\infty}{10^{-3}c}\right)^2 \mathrm{cm}^{-2}\,\mathrm{sr}^{-1}\,\mathrm{s}^{-1}\,,$$

where R_*, M_* and τ_* are the radius, mass and field survival time of the neutron star, and v_∞ is the monopole's velocity far from the star. The v_∞^2 dependence expresses the classical gravitational enhancement of the star's geometric cross section for capturing objects. Although the limit is independent of B, other problems arise unless $B \gtrsim 10^6$ G, a condition easily met for any pulsar. The limit is hardly stringent for most pulsars ($\tau \lesssim 10^6$ yr), but a pulsar such as PSR 1937 + 214, thought to be more than 10^9 yr old [49], leads to a flux limit of about 5×10^{-22} cm^{-2} sr^{-1} s^{-1} for monopoles with asymptotic velocity $v \approx 10^{-3}c$. Unless problems are found with Harvey et al.'s analysis or the pulsar age, this limit, more than six orders of magnitude below the Parker bound, means that terrestrial monopole detection will be virtually impossible.† A circular detector through which one monopole year passed would have a circumference of 160 km, twice that of the proposed Superconducting Super Collider.

2.7. Monopole–antimonopole annihilation

Annihilation might contribute to the luminosity of various objects. Carrigan [29] has showed that unreasonable heating of the earth would occur unless $F \lesssim 7 \times 10^{-13}$ cm^{-2} sr^{-1} s^{-1}. The neutron star case is complicated by the superconducting core: Different monopoles occupy different flux tubes, and hence seldom meet [50]. Annihilation might contribute to the luminosity of lower main-sequence stars, but would probably be unobservable [51].

2.8. Limits based upon nucleon decay catalysis

As was mentioned earlier, several workers have independently noted that the monopoles appearing in grand unified theories ('t Hooft–Polyakov monopoles) have interactions with ordinary matter which do

* Since the conductors are proton Cooper pairs, the flux quantum is $\frac{1}{2}(4\pi g)$, where g is the Dirac monopole charge.

† At first sight it would appear that limits two orders of magnitude under the Parker bound would be set by 10^7 year old pulsars, whose ages are more securely established. In this case, however, fields might be sustained by currents nearer the crust, and the analysis would not apply.

not conserve baryons [20–22]. A proton in the vicinity of a magnetic monopole would thus decay very quickly; the monopole would then proceed to another close encounter with a nucleon whose decay will also be catalyzed. The cross section for the process can be written [52] as

$$\sigma_{\Delta B \neq 0} = \frac{c}{v}\left(\frac{\hbar c}{1\,\mathrm{GeV}}\right)^2 \sigma_0$$

where v is the monopole–nucleon relative velocity, $(\hbar c/1\,\mathrm{GeV})^2 = 0.4\,\mathrm{mb}$, and σ_0 is a dimensionless fudge factor estimated as O(1) to O(100) by the original authors. We might thus expect decay-catalysis cross sections typical of those of the strong interactions.

In carefully repeating the calculations, Bais et al. obtained values in the range $O(10^{-3})$ to $O(10^{-5})$ for σ_0 [53]. Preskill has argued that there is further suppression, perhaps to $O(10^{-10})$ [55]. Walsh et al. have concluded that the Rubakov–Callan effect vanishes completely, at least in the SU(5) case, if the fermions in the theory have mass [56]. Others disagree [57].

Evidently catalysis can still occur via the "weak anomaly", having to do with baryon number indefiniteness in unbroken subgroups of the unification group, even if the physics near the monopole core does not violate baryon conservation (through quark-lepton unification) [54, 58, 59]. While cross sections for this alternate to the Callan–Rubakov process are likely to be many orders of magnitude smaller, the process can "go" even when the Callan–Rubakov process cannot. It is also argued to be a general feature of all monopoles, not just of 't Hooft–Polyakov monopoles [58].

On one hand, the hapless experimenter is assured that decay catalysis must certainly occur, and on the other is told that various mechanisms may suppress or destroy it. If observed, two crowning predictions of grand unified theories would be verified simultaneously – nucleon decay and the existence of monopoles. Its non-observation proves little. We proceed to discuss astrophysical limits based upon catalysis, but are inclined to take them as far more conjectural than other limits discussed in this paper.

It is convenient to re-write the above catalysis cross section as

$$(v/c)\sigma_{\Delta B \neq 0} = 10^{-28}\,\mathrm{cm}^2\, f_0\,,$$

where the dimensionless and velocity-independent scale factor f_0 differs from σ_0 by a factor of about four.* If all of the nucleons in a material with density ρ (and nucleon number density N_n) behave as free nucleons, then the catalyzed nucleon decay rate is $N_n v\sigma = c f_0 \rho \times (6.4 \times 10^{-5}\,\mathrm{g}^{-1}\,\mathrm{cm}^2)$. For ordinary water the rate is $2 \times 10^6 f_0$ per second,† so that for $v = 10^{-3}c$ the interaction length is $16 f_0$ cm. In the core of a neutron star, this primordial Pac-Man [66] wreaks its havoc at $5 \times 10^{20} f_0\,\mathrm{s}^{-1}$, corresponding to power production of $75 f_0$ GW for each monopole! Needless to say, a substantial monopole concentration would lead to excessive luminosity for any of several kinds of astrophysical objects. A number of interesting flux limits can be calculated.

Neutron stars have received the most attention [60–63]. Monopoles with an initially non-relativistic

* We contribute to the Babel of notation with great reluctance and only after several revisions. Various authors use σ_0, $\sigma_{\Delta B}$, $\langle\sigma\beta\rangle/10^{-27}$, $\sigma_0\beta$, σ_{-28}, etc.; we object to each for various reasons. In our notation f_0 is about unity for a strong-interaction catalysis cross section, and the actual cross section is given by $\sigma = 10^{-28}\,\mathrm{cm}^2 f_0/\beta$, where βc is the monopole–nucleon relative velocity.

† For this example we have neglected velocity-dependent corrections due to the extra angular momentum in the electromagnetic field of the monopole–nucleus system [65]. This factor strongly suppresses the catalysis cross section for even-spin nuclei such as oxygen, and enhances it for protons by approximately $(10^{-3}/\beta)$. The correction is relevant for main-sequence stars and terrestrial catalysis experiments. The same physics leads to higher binding energies and larger capture cross sections for monopole–nucleus bound states when the nucleus has odd spin.

velocity which are less massive than about 10^{21} GeV/c^2 will stop in a neutron star. After exposure to a flux F for a time τ, the total number collected is

$$N_M \approx 4\pi\, F\tau\, \pi R^2 (1 + (v_{esc}/v_\infty)^2)\,,$$

where πR^2 is the star's geometric cross section, $v_{esc}(\approx 0.3c)$ is the escape velocity from the surface, and v_∞ is the monopole's velocity far from the star. The last term is the gravitational enhancement of the star's capture cross section; for $v_\infty = 10^{-3}c$ it is about 10^5. Most monopoles will settle to the core, where the density is ρ_c. The decay catalysis contribution to the star's luminosity should then be

$$L_M \approx N_M (m_n c^2) c\rho_c f_0 \times (6 \times 10^{-5}\ \mathrm{g}^{-1}\ \mathrm{cm}^2)$$

where $m_n c^2$ is the rest energy of a nucleon.

Given this general framework, the problem of setting flux limits reduces to (a) finding sensible upper limits on the luminosity of neutron stars, (b) estimating their ages or age distributions, (c) taking into account effects which might modify the catalysis rate (for example, monopole–antimonopole annihilation, effects of local heating on the density, or monopole ejection because of a pionic core [7, 50]), and (d) as always, worrying about the value of f_0. The latter issue can be avoided by leaving f_0 in the quoted limit. The luminosity limits have come from direct X-ray flux limits on individual objects, negative results from searches for X-ray stars in selected fiducial areas of the sky, and from limits on the neutron star contribution to the diffuse X-ray background. All of the flux limits are in the range $Ff_0/r \lesssim (10^{-24}$ to $10^{-22})\ \mathrm{cm}^{-2}\ \mathrm{sr}^{-1}\ \mathrm{s}^{-1}$, where r is the ratio of total luminosity to photon luminosity. For a hot neutron star, r can be very large because of neutrino emission, while for "old" stars it is about unity. A particularly interesting twist was introduced by Frieman [67], who noted that the limit could be reduced by 10^6 if most of the monopoles had been captured by the star's main sequence progenitor. A recent comparison of various approaches has been made by Kolb and Turner [63], and we cannot improve upon their discussion.

If the monopole's mass is sufficiently low, electromagnetic forces dominate gravity as the monopole approaches a neutron star. The enormous dipole fields possessed (or once possessed) by most neutron stars are sufficient to deflect monopoles lighter than about 10^{14} GeV/c^2. The neutron star catalysis flux limit band shown in fig. 1 is therefore cut off at this mass.

Similar bounds have been obtained for white dwarfs [68], Jupiter and the earth [30]. Although less stringent than the neutron star limits, they are subject to quite different loopholes. Freese [68] has been able to argue from both sides: For old white dwarfs to have cooled to $10^{-4}\,L_\odot$, we require $Ff_0 \lesssim 2 \times 10^{-18}\ \mathrm{cm}^{-2}\ \mathrm{sr}^{-1}\ \mathrm{s}^{-1}$, while the absence of fainter white dwarfs might be taken as evidence that the bound is saturated! The planetary case is especially interesting because of the remote possibility that the monopoles might cluster with the stars (habitat 4 above); the complications are that only light or slow monopoles can be captured and that nuclear effects might modify the effective catalysis cross section. For the earth, Turner obtains $F_\oplus f_c f_0 \lesssim 7 \times 10^{-23}\ \mathrm{cm}^{-2}\ \mathrm{sr}^{-1}\ \mathrm{s}^{-1}$, where f_c is the fraction of monopoles with velocity less than $3 \times 10^{-5} c/M_{16}$. For Jupiter, the limit is $5 \times 10^{-19}\ \mathrm{cm}^{-2}\ \mathrm{sr}^{-1}\ \mathrm{s}^{-1}$, where this time $f_c \approx 1$ if $M \lesssim 10^{16}$ Gev/c^2. For $v \approx 10^{-3}c$, the Jovian limit is better than the terrestrial limit because of the capture factor.

Frieman, Freese and Turner [51] have calculated the monopole catalysis contribution to the luminosity of main-sequence stars, with the conclusion that the effects would be unobservable, even for a substantial

catalysis contribution to the total luminosity. This result is not unexpected, since it has long been known that the structure of a star is insensitive to how the energy is generated, so long as it is generated near the center [69]. Convection inhibits $M\overline{M}$, at least for upper main-sequence stars. However, as was mentioned above, the long monopole accumulation time in a neutron star's progenitor effectively reduces the neutron star catalysis limits by six or more orders of magnitude.

A related line of reasoning has been followed by Kajita et al. [70]. Catalysis in the sun would lead to an observable neutrino flux (through the decay of catalysis-produced mesons) in the KAMIOKANDE nucleon decay detector. Three events were observed, consistent with expected background from the decay of unobserved muons. The null results is interpreted as a flux limit

$$Ff_0 \lesssim 6.5 \times 10^{-15}\,\mathrm{cm}^{-2}\,\mathrm{sr}^{-1}\,\mathrm{s}^{-1} \times (0.25 + (10^{-3}c/v_\infty)^2)\,,$$

where the last factor expresses the usual gravitational enhancement of the capture rate and βc is the monopole–proton relative velocity in the core. The "0.25" arises because the sun's escape velocity ($2 \times 10^{-3}c$) has been explicitly inserted; for all practical purposes it may be dropped. For $\beta = 1.7 \times 10^{-3}c$ in the solar core, the authors follow Arafune and Fukugita [65] in including another factor of β^{-1} on the right side, to obtain the limits shown in their paper. While the limits do not apply for fast or massive monopoles (which are not captured), they are interesting for the case of monopoles bound to stellar systems.

Terrestrial proton-decay detectors are sensitive to monopole-catalyzed nucleon decay. These limits, although far less stringent than the astrophysical ones, close an interesting loophole in the above arguments. They will be discussed in section 9.

2.9. Conclusions concerning the astrophysics of massive monopoles

We summarize the main results of this rather long section as follows:

1. Relic monopoles probably arrive at the earth with velocities close to $10^{-3}c$.
2. If they arrive with velocities higher than v_{mag} (which would happen if their masses were below $10^{17}\,\mathrm{GeV}/c^2$ or so), field survival arguments limit the flux to less than $10^{-15}\,\mathrm{cm}^{-2}\,\mathrm{sr}^{-1}\,\mathrm{s}^{-1}$.
3. If they have remained clustered with the galaxy since its formation, they must be more massive than nearly $10^{19}\,\mathrm{GeV}/c^2$.
4. For masses between roughly $10^{16}\,\mathrm{GeV}/c^2$ and $10^{19}\,\mathrm{GeV}/c^2$, cosmological density arguments provide the lowest flux limits.
5. A more tenuous argument concerning field survival limits in rich clusters results in limits below $10^{-19}\,\mathrm{cm}^{-2}\,\mathrm{sr}^{-1}\,\mathrm{s}^{-1}$ over part of the mass range.
6. A plane detector of area A subtends a solid angle of 2π. If it detects no events in a time t, then at the 90% confidence level $F \lesssim (2\pi A t) \times \ln 10$. Thus, if a flux limit at the "Parker bound" ($10^{-15}\,\mathrm{cm}^{-2}\,\mathrm{sr}^{-1}\,\mathrm{s}^{-1}$) is to be reached in one year, the detector area must be just over $1000\,\mathrm{m}^2$, substantially larger than that of any detector yet built.
7. If monopoles catalyze nucleon decay, then $F \lesssim 10^{-22}\,\mathrm{cm}^{-2}\,\mathrm{sr}^{-1}\,\mathrm{s}^{-1}$ for $f_0 = 1$.
8. Conversely, if monopoles do not catalyze nucleon decay, and if the analysis by Harvey, Ruderman and Shaham is correct, the survival of the magnetic fields of old neutron stars implies $F \lesssim 5 \times 10^{-22}\,\mathrm{cm}^{-2}\,\mathrm{sr}^{-1}\,\mathrm{s}^{-1}$.

3. Superconducting induction experiments

A monopole may come with an attached proton or heavier nucleus, may carry electric charge of its own, or may be moving too slowly to be detected in plastic scintillator or in a proportional chamber. However, it still carries a magnetic charge of at least $e/2\alpha$, and as such will induce a predictable current if it threads a conducting loop. The absence of signal in experiments which exploit this property thus provide our only totally incontrovertible evidence against the passage of monopoles through the apparatus. It is only the difficulty and cost of building large inductive detectors which makes other approaches attractive.

A loop of wire passed over a monopole with charge g necessarily "cuts" all of its flux, or (by Gauss's theorem) $4\pi g$. For the minimal Dirac monopole, $4\pi g = 4.14 \times 10^{-7}$ G cm^2. If the loop has inductance L (in henry), then the current (in ampere) induced in the loop by the monopole's passage is $4\pi g/L = 4.14 \times 10^{-15}/L$. Since a 1 m loop of 250 μm wire has an inductance of about 10 μH, the passage of a Dirac monopole through it would induce 0.4 nA [71]. While this is not a difficult current to measure with ordinary instruments, there are practical problems:

1. A part in 10^{-11} variation of the earth's field (caused by the passage of a distant bicycle?) would produce a similar current.

2. Under most circumstances the current would quickly decrease, making its measurement more difficult than in a DC situation.

3. For noise reduction reasons, a large detector would of necessity be inside a conducting shield. Since the area of the detector should be as large as practical, its dimensions are not small compared with the dimensions of the enclosure. As shown in fig. 2, eddy current loops are induced in the walls by the passing monopole. These currents go in the same (projected) direction as the currents induced in the loop, and contribute to the flux in the loop. As a result, the induced current in the loop might be substantially smaller than $4\pi g/L$.

Although in principle superconducting techniques are not necessary, their contribution to the solution of the first two of these problems is so great that they have been used in all successful experiments to date. In the first place, a loop in a superconducting enclosure is highly isolated from ambient field perturbations, and the field itself may be reduced or virtually eliminated using established techniques [6, 72]. Secondly, the induced DC current in the loop can be measured with extremely high sensitivity by using SQUID's (superconducting quantum interference devices).

According to Dirac's original argument concerning the monopole charge, the requirement that an electron moving in a closed path have a single-valued wave function meant that the magnetic flux through the path was an integral multiple of $4\pi g$, or hc/e. In a real superconductor "Cooper pairs" of electrons are actually the charge carriers, so the flux quantum has half this value, or $\phi_0 = hc/2e$. The signature of a monopole's passage through an isolated loop should thus be a current change corresponding to $2\phi_0$ (or an integral multiple of $2\phi_0$).

An apparent problem arises from our statement that the loop "cuts" the flux lines, since flux lines cannot penetrate a superconductor. The resolution is shown schematically in fig. 3. As the monopole passes through the loop, lines bend around the superconductor, and eventually pinch off to leave the newly rejoined lines on the other side of the loop and closed lines around the wire – in other words, those produced by the current which now exists [73].

Cabrera's original detector is shown in fig. 2 [6]. Magnetic fields near the four-turn loop were reduced to 5×10^{-8} G in several steps, ranging from the use of a Mumetal shield on the outside, to "lead balloons" on the inside which were expanded after they became superconducting. The loop was

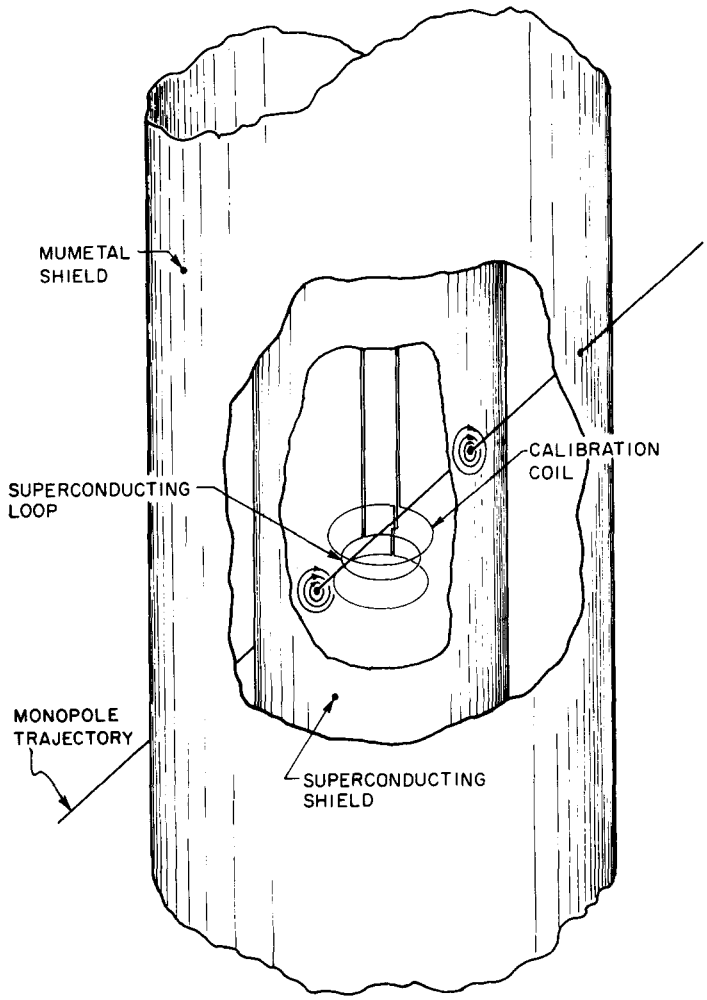

Fig. 2. Cabrera's original superconducting induction detector.

small compared with the enclosure dimensions, so eddy current vortices in the walls would reduce the monopole current signal by no more than 6%. The expected monopole signature was remarkably specific: Passage of a minimal-charge monopole would produce a current transition equivalent to a flux change of $8\phi_0$, within 6%.

Extension of the technique to large-aperture experiments was difficult: The heroic measures needed to reduce the ambient field were not easily extendable to very large enclosures, and in any case enclosures could not be large compared with large-area loops. Independent approaches to each of these problems have now converged to a roughly common style now being used by several groups.

A group working at IBM [74, 75] approached the problem of making the detector insensitive to changes in the ambient field, developing "gradiometers" of the kind illustrated in fig. 5. In part (a), four identical loops are shown, connected in series so that current flows in the opposite sense in adjacent loops. Any time change in a uniform magnetic field normal to the paper would thus result in no induced current. It also follows that the time change of a normal field with a constant *gradient* in x and y would

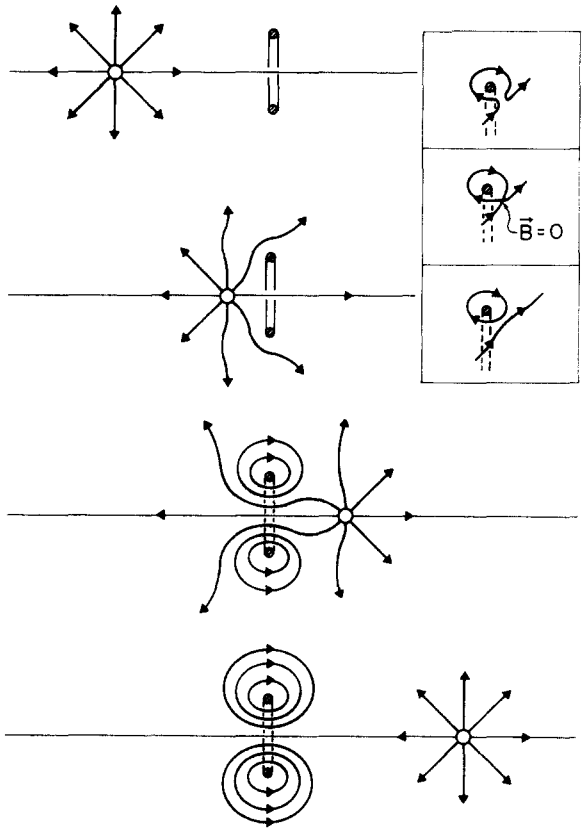

Fig. 3. Field line behavior as a monopole goes through a superconducting loop. Although lines never "cut" the conductor, they distort and then pinch off (see inset), resulting in radial lines from the monopole after it goes through the loop, as well as those due to the induced current in the loop.

also produce no induced current. More complicated loop structures can be constructed, in two or three dimensions to eliminate flux change sensitivity to as high an order as desired. For example, the planar gradiometer shown in fig. 5(b) is insensitive through third derivative changes in the plane of the paper. Given reasonably good magnetic shielding, no special field reduction techniques are required.*

Motivated primarily by the desire to reduce sensitivity to the vortex currents deposited on the enclosure walls, the University of Chicago–Fermilab–Michigan group arrived at quite similar structures [77, 78]. Their argument was that if the larger loop could be twisted and deformed into a number of smaller loops with alternating current flow directions, just as is shown for four loops in fig. 5, then the flux from eddy vortices would induce cancelling e.m.f.'s in adjacent cells if the cell size were small compared with the distance to the shield. The first such "macramés" were literally woven. They were later plated onto G-10, using solder as the superconductor. The boards were two-sided, with plated-through holes to connect loops in the appropriate sense. A nine-loop example of such a macramé is shown in fig. 6(a). It, like the gradiometer coil shown in fig. 5, can be deformed back into a single loop if several twists out of the plane are made.

However, there is no reason not to run several loops in *parallel*. As the simplest example, consider a square loop with the SQUID connected across a diagonal. The diagonal connection may be deformed to

* Henry Frisch has pointed out that Ampere invented the device in 1820, to reduce the effect of the earth's fields in his experiments [76].

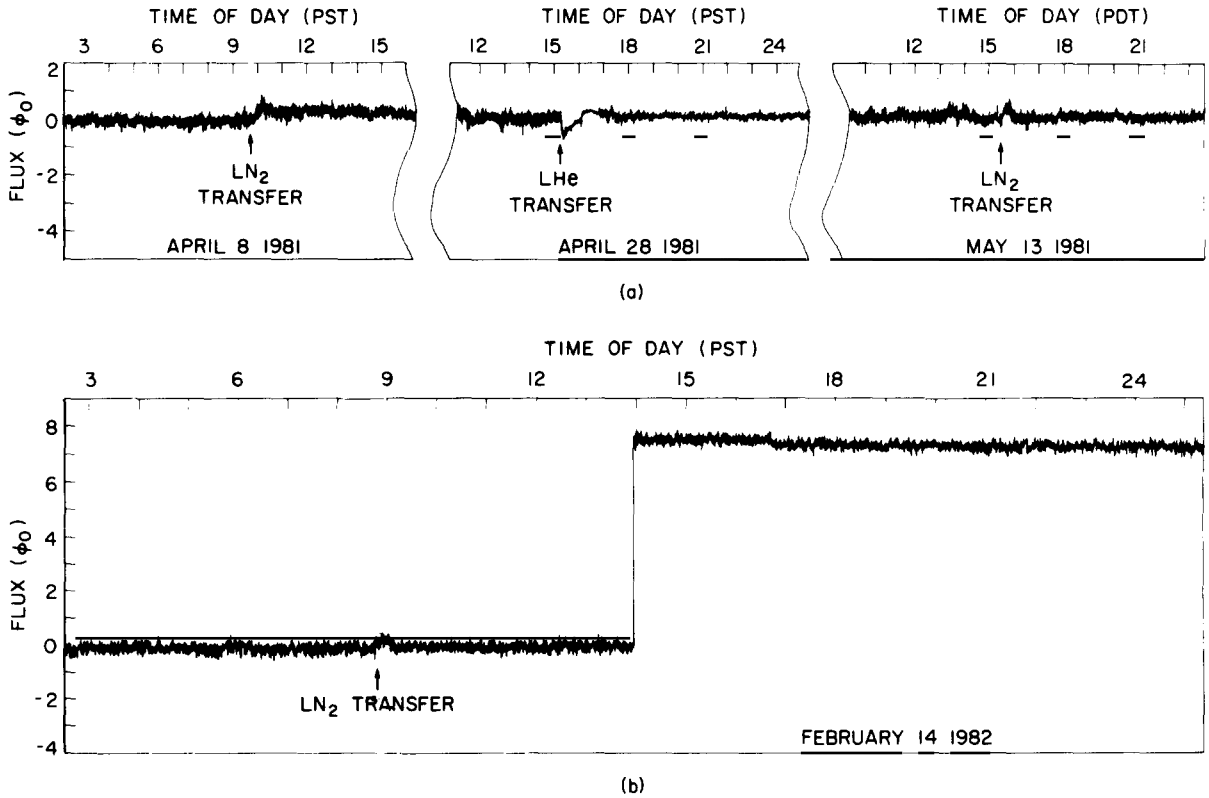

Fig. 4. Data record for Cabrera's original apparatus for 1982 Feb. 14, showing the step of nearly 8 flux units, as expected for a Dirac monopole. Also shown are typical disturbances produced when the apparatus was serviced.

divide the square into a large number of smaller squares, with alternate squares belonging to the two halves of the original square [79]. Such a scheme is shown in fig. 6(b), where the shaded squares all belong to the lower left triangle. It is somewhat easier to make one-sided macramés or gradiometers, but the innovation also has a far more important advantage: As gradiometers become larger their inductances become larger. The impedance of a large loop has usually been matched to that of the SQUID by means of a transformer. For a several-loop topology the inductances are in parallel, and so the layout can be chosen to provide the impedance match directly. Frisch and his collaborators have shown that the multiloop configuration is exactly equivalent to using one loop and a transformer [79], but transformers are always less than ideal. The new topology will be used in several of the detectors described below.

To the best of our knowledge, monopole experiments with superconducting loops are being done by seven groups:

1. *Stanford.* The pioneering work in the field was done by Blas Cabrera, who with his original four-turn, 5 cm diameter loop saw a respectable candidate event on Valentine's Day, 1982 [6]. The apparatus is shown in fig. 2, and the data record for that Sunday is shown in fig. 4. Small signals were seen during liquid nitrogen transfers, and small steps in the SQUID output have been observed – none anywhere near the size of the monopole signature so beautifully represented by the data. Despite efforts by several groups, no adequate explanation for the event has ever been found. Cabrera never claimed that the event were due to a monopole's passage, but if it were a monopole flux 6×10^{-10} cm^{-2} sr^{-1} s^{-1}

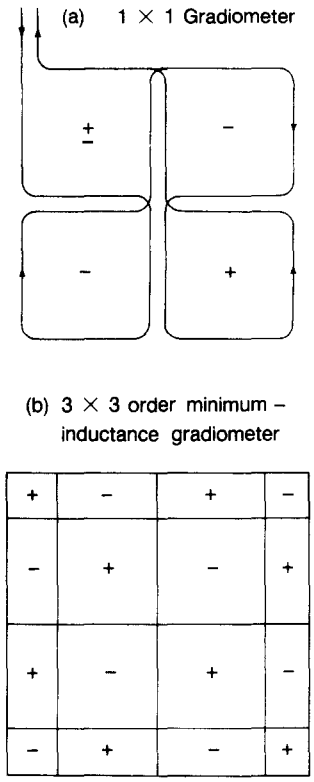

Fig. 5. (a) A first-order gradiometer in two dimensions: No current is induced if either a field normal to the paper z or its first derivatives in x or y changes in time. (b) A 3×3 order planar gradiometer, insensitive to field changes to third order in x or y, normal to the paper.

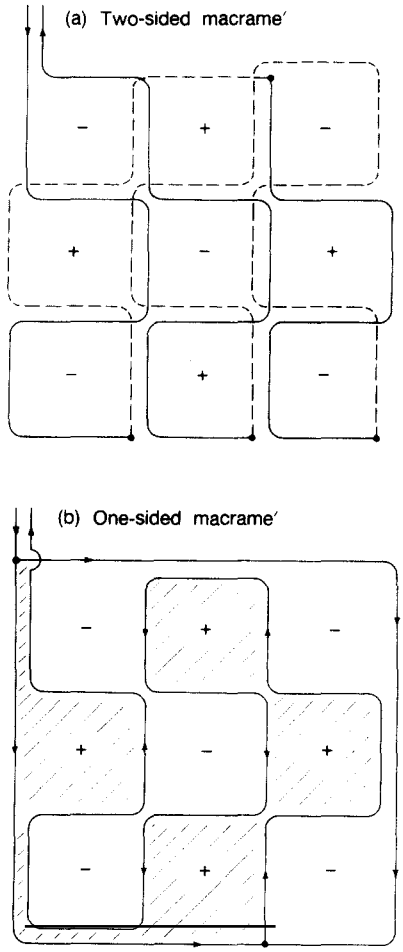

Fig. 6. Two-sided and one-sided macramés. The circuit on the two-sided board shown in (a) is topologically a single loop with several twists out of the plane, while the circuit shown in (b) can be deformed in the plane from two loops connected in parallel.

would be implied, based upon the reported 151 days of data. Since later experiments have provided nearly a thousand times the exposure without producing another viable candidate, we instead follow Cabrera in quoting an upper limit of $1.4 \times 10^{-9}\ \mathrm{cm}^{-2}\ \mathrm{sr}^{-1}\ \mathrm{s}^{-1}$ at the 90% confidence level.* This and other limits are shown in fig. 7.

The successor to this detector was designed for redundancy as well as for larger sensitive area [80, 81]. It was made by winding three orthogonal loops of two turns each on thin groves cut into the surface of a 500 ml Florence flask. (An additional loop is used for calibration.) With r.m.s. noise below $0.02\phi_0$ (or $0.02\phi_0/L$ in the current), a noise signal as large as $0.1\phi_0$ is exceedingly improbable, and an accidental double coincidence between two loops within the system's bandpass might occur every 5000 years. The

* 90% confidence levels, $\ln 10 \times (\int \mathrm{d}A\, \mathrm{d}\Omega\, \mathrm{d}t)^{-1}$, will be quoted for all direct experimental results. Conversions have occasionally been made without comment.

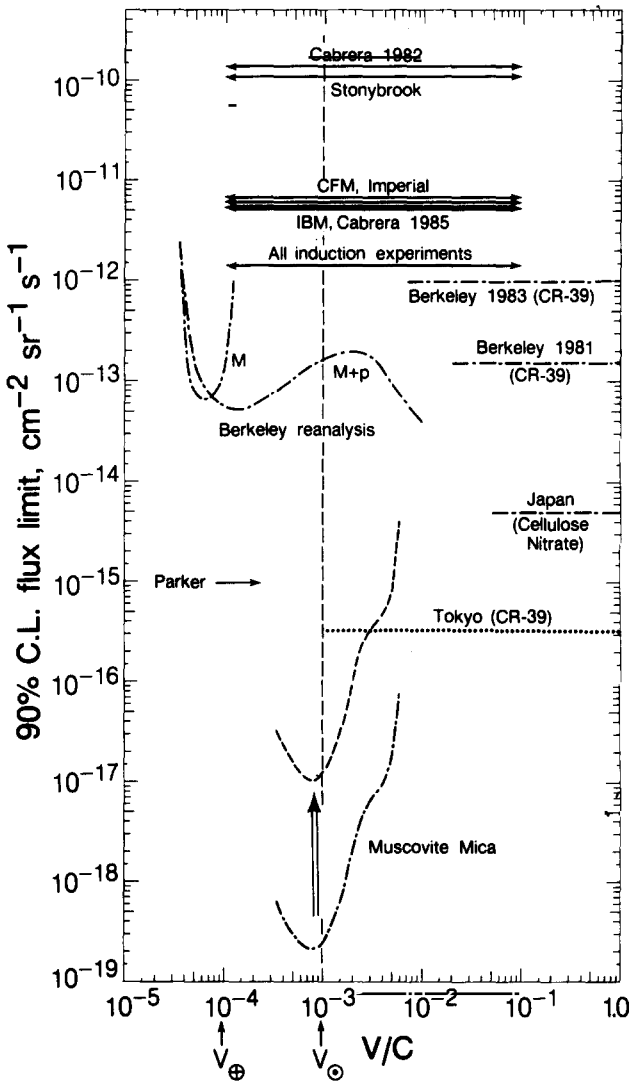

Fig. 7. Monopole flux limits obtained with induction detectors (solid lines independent of velocity) and track-etch detectors (dash-dotted lines). Early results of several groups have been omitted. The displaced mica curve indicated by the arrow shows what is believed to be the maximum correction for early proton capture. The dotted line indicates the one-year limit for a planned experiment.

group distinguishes between two kinds of events: Those that penetrate one loop ($\sim 4\phi_0$) and show a signal $>0.1\phi_0$ in another, as might be produced by wall vortex currents, and "near miss" events, in which the vortex currents produce signals $>0.1\phi_0$ in at least two loops. The average detector area* for the "penetration events" is 71 cm^2, and the average area for "near miss" events is 405 cm^2. The total area of 476 cm^2 can be used to set limits in the absence of signal, whereas one would certainly require a penetration signal to establish the existence of monopoles. A cosmic ray shield surrounds the apparatus [82], and a magnetometer and accelerometer complete the experimental armor. Excursions as large as

* In most induction experiments an "average area" is reported, an area which when multiplied by 4π gives the area-solid angle product usually quoted for the excitation-ionization experiments. Since the area–solid angle product of a plane detector with area A is $2\pi A$, its "average area" is $A/2$.

$0.1\phi_0$ in one loop only have occasionally been seen; these are not understood but are possibly due to the motion of trapped fluxons in the SQUIDs. The apparatus was cooled down on 25 January 1983, and as of 5 September 1985 no monopole candidate events had been seen, for a preliminary flux limit of $5.3 \times 10^{-12}\,\mathrm{cm}^{-2}\,\mathrm{sr}^{-1}\,\mathrm{s}^{-1}$. A detailed final report will be published after the experiment is terminated in late 1985 [83].

A $1.5\,\mathrm{m}^2$ detector is nearly complete, and will be cooled down at the beginning of 1986. Eight $16\,\mathrm{cm} \times 490\,\mathrm{cm}$ one-sided gradiometers, of the kind described above, cover the sides of an octagonal prism. Its "hit" area is 32 times greater than the "near miss + hit" area of the three-loop detector. Along with the new large-area detectors being built by other groups, it also provides prototype experience for detectors which may someday push direct flux limits below the Parker bound.

2. *IBM*. As mentioned above, the group at IBM has pioneered the use of gradiometers in building large-area induction detectors. A prototype using two coincident $10\,\mathrm{cm} \times 10\,\mathrm{cm}$ seventh-order gradiometers was brought into operation on 8 April 1983 [75]. With an effective area of $24\,\mathrm{cm}^2$ for coincident operation, it established a flux limit of $5.2 \times 10^{-10}\,\mathrm{cm}^{-2}\,\mathrm{sr}^{-1}\,\mathrm{s}^{-1}$ in its 165 days of operation; its single-loop limit is three times smaller.

This detector was replaced by a six-gradiometer device with an effective area of $0.1\,\mathrm{m}^2$, with the gradiometers covering the faces of a $15\,\mathrm{cm} \times 15\,\mathrm{cm} \times 60\,\mathrm{cm}$ rectangular prism. It operated for 15 months, starting on 14 November 1983. Two events with large ($\sim 1\phi_0$, $\sim 1\phi_0$), almost-coincident steps were in fact seen, but both could be ruled out using any of several criteria. The final limit was $5.5 \times 10^{-12}\,\mathrm{cm}^{-2}\,\mathrm{sr}^{-1}\,\mathrm{s}^{-1}$ [84].*

A $1\,\mathrm{m}^2$ detector should be cooled down in early 1986 [85, 86]. (It is, of course, a prototype for a more ambitious attempt.) Each face of a horizontal rectangular prism is $25\,\mathrm{cm} \times 380\,\mathrm{cm}$, and is made up of fifteen $25\,\mathrm{cm} \times 25\,\mathrm{cm}$ gradiometers, all connected in parallel to a single DC SQUID. Each gradiometer board is of the double-sided variety, which for this particular design gives a somewhat larger signal. In turn, this detector is to be replaced by a $4\,\mathrm{m}^2$ octagonal model, shown in fig. 8. The cryostat is to be delivered in January 1986, but details of the design are in flux pending experience with the $1\,\mathrm{m}^2$ detector. The $4\,\mathrm{m}^2$ detector is thought of as a prototype module for a very large array of such devices.

3. *Chicago–Fermilab–Michigan (CFM)*. This innovative group has also been building a series of "prototype" induction detectors, the first of which has set limits comparable to those given above [77, 78]. It consisted of two parallel macramé planes, each in its own superconducting shield. The average area for coincident detection was $700\,\mathrm{cm}^2$. Each of the two-sided macramés consisted of 80 loops, in a square pattern on a 0.6 m circle of G-10. The detector assembly was similar to the newer version shown in fig. 9. Its eight months of operation with no candidate events lead to a flux limit of $6.7 \times 10^{-12}\,\mathrm{cm}^{-2}\,\mathrm{sr}^{-1}\,\mathrm{s}^{-1}$. The successor to this detector, shown in fig. 9, is now operating. It is somewhat larger (1.1 m diameter gradiometers), and uses the new one-sided gradiometers with several loops in parallel. In addition, each of the shields contains two gradiometers instead of one. They are close together, but one is rotated by 90° about their common axis, essentially eliminating their mutual inductance. The distance between the two shields has been increased. A four-fold coincidence is not required but might be expected about 20% of the time, and the effective detector area for two-fold coincidences is $0.75\,\mathrm{m}^2$.

How big can one make a detector plane connected to a single SQUID, while still obtaining a usable signal/noise ratio? DC SQUIDs promise a factor of 10 over the RF SQUIDs used so far, and the impedance-matching tricks already discussed provide further gain. Frisch and his co-workers conclude that areas in excess of $3\,\mathrm{m}^2$ are quite reasonable [71].

* The limits set by the four largest detectors yet operated are the same to within 20%, as of October 1985.

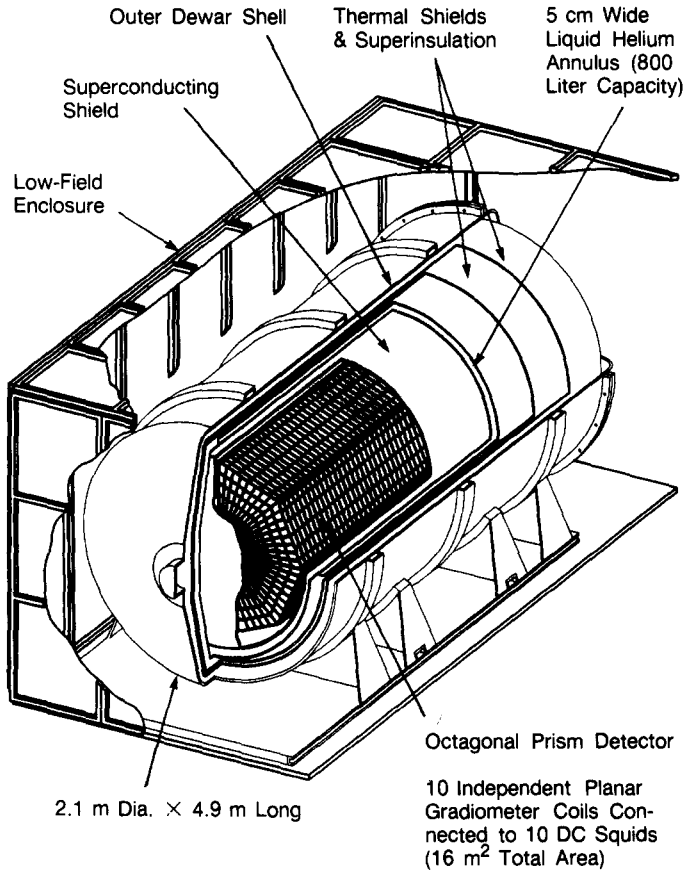

Fig. 8. The proposed IBM–BNL 4 m^2 superconducting inductive monopole detector, now in its early design and procurement stages.

In CFM's concept, several pairs of such detectors, in separate shields as at present, could be mounted in a common cryostat. An array of such cryostats (e.g. filling the floor of the old cyclotron hall at the Fermi Institute) with an effective area of perhaps 100 m^2 could set limits at the Parker bound after a three-year run.

4. *Imperial College, London*. The group's entry into the field started with a three-loop detector with an effective area of 16 cm^2 [87]. Inductive coupling to the walls was reduced in yet a different way: In series with each main coil was a small multi-turn coil wound in the opposite sense, so that the net flux coupling was very small. The detector has since evolved in an interesting direction. One of the 17 cm diameter coaxial loops was replaced by a large rectangular ("window frame") loop with one side along the axis of the cylindrical shield, and the others almost in contact with it. C.N. Guy has shown that the response is almost the same as that of a straight wire coaxial with the shield, which in essence serves as the current return path [88]. There is some distribution of signal size, but for most monopole paths it is close to $2\phi_0$. Using the modified detector, which has an effective area of 0.17 m^2, the group has established a flux limit of $6 \times 10^{-12}\ cm^{-2}\ sr^{-1}\ s^{-1}$ in 202 days of livetime [89].

A viable monopole candidate was seen in the "window frame" in August 1985 [90]. Given the presence of unexplained glitches in detectors of this kind, as well as the lack of redundancy, we remain skeptical. This

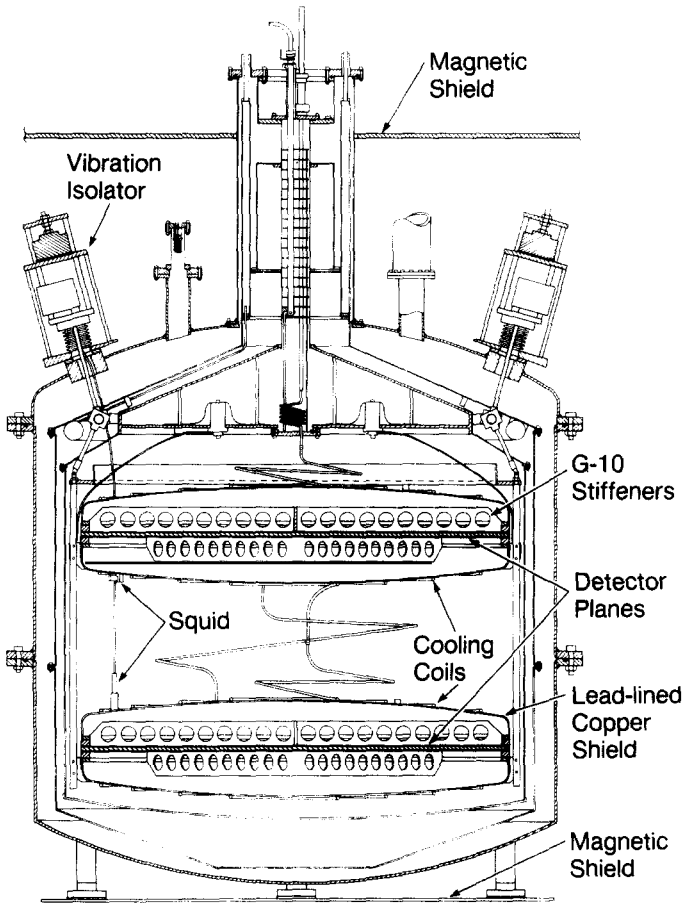

Fig. 9. The present Chicago–Fermilab–Michigan induction detector. A cylindrical section has been added to lengthen the housing used in the previous experiment [78], and each detector plane consists of two coincident gradiometers.

event once again underscores the need for coincident detection, if an effect rather than an upper limit is to be established.

5. *Kobe University*. Ebisu and Watanabe have assembled a detector with an 8 cm diameter coil in order to search for superheavy monopoles trapped in magnetic iron ores [31]. The idea is to heat the magnetic sand above its Curie point over the apparatus; the monopoles are then no longer bound to the ore and fall through the loop under the influence of gravity.* A search of more than 900 kg of ore has revealed no candidates, for a limit of 2.5×10^{-6} monopoles/g (90% C.L.). They relate this to a flux limit of 5.9×10^{-10} cm^{-2} sr^{-1} s^{-1}. The density limit represents a substantial improvement over previous limits established by similar methods [91, 92], and a larger detector is to be installed in a commercial ore processing plant. Given the conjectural nature of the monopole capture and release mechanism, and in particular to the way the trapped density is related to a flux, we are uncertain as how to weight the limits set by these imaginative experiments. As a byproduct, they have also established direct flux limits, albeit less stringent than the ones now available elsewhere.

* March, Cline and Joutras have proposed a similar detector, to be located in a U.S. Steel facility which has a ten million ton per year throughput [32].

6. *Stonybrook* [93]. Kao and his collaborators have established a limit at $1.1 \times 10^{-10}\,\mathrm{cm}^{-2}\,\mathrm{sr}^{-1}\,\mathrm{s}^{-1}$, using a detector with two close gradiometers in separate superconducting shields. Each consists of an 8 cm × 25 cm Nb wire grid with 1 cm cell size, wound in the style of the two-sided gradiometer shown in fig. 6(a). No coincident steps were observed in 190 days.

7. *NBS*. A group at the National Bureau of Standards focused its early attention on how artifact events might be produced in superconducting induction apparatus. Intentionally working with a small coil in a single Mumetal shield, they subjected parts of the apparatus to a variety of mechanical shocks, stresses and magnetic signals. Steps corresponding to flux changes were in fact produced, but only as the result of large disturbances. Their conclusion was that with good clamping and prudent protection from disturbances such signals could be completely eliminated [94].

A device similar to Cabrera's three-loop detector was then built, with three orthogonal 16 cm diameter coils inside a 30 cm shield [95]. Its near-miss area was somewhat larger than Cabrera's, and after a year of operation had seen no events.

All groups have reported unexplained steps in the SQUID outputs, although the steps are seldom greater than $1\phi_0$. Histograms of step size distributions are given in most of the papers. Typically, steps are larger and more frequent in the early weeks of operation, and the distributions are rapidly decreasing functions of step size. Stress relief somewhere in the system is the usual suspect.

As of September 1985, the combined flux limit in superconducting induction experiments is $1.5 \times 10^{-12}\,\mathrm{cm}^{-2}\,\mathrm{sr}^{-1}\,\mathrm{s}^{-1}$, where most of the weight comes from the first four experiments discussed above. Within about 18 months the limit should be reduced by another order of magnitude, as results are obtained with the new $\sim 1\,\mathrm{m}^2$ detectors. There seem to be no technical obstacles to building detectors a hundred times larger, and perhaps within the decade such detectors will push limits to the Parker bound.

4. Ionization and/or excitation by slow monopoles

The monopole detector of preference is undoubtedly a superconducting loop, since the detection scheme then employs the one attribute of a monopole of which we are certain. On the other hand, areas of $1000\,\mathrm{m}^2$ or greater are necessary to probe the limits discussed above. Although the most recent work suggests that economical induction detectors of this scope may become possible, we are also motivated to consider the cheap, large-area detectors normally used for particle detection, i.e. plastic scintillators and proportional wire chambers (PWCs). But can they detect slow monopoles? We lack the "test beam" usually available to the experimenter, and must proceed with care. The answer depends upon what we mean by "slow", but it is cautiously affirmative, even for conventional detectors, down to just below the velocities expected for galactic monopoles. For velocities between $10^{-3}c$ and $10^{-4}c$ there is both uncertainty and controversy. At the even lower velocities characteristic of a monopole orbiting the earth ($<4 \times 10^{-5}c$), it seems unlikely that any scintillator or PWC would respond to a monopole's passage.

We now understand that the most important way a slow monopole loses energy to an atomic system is in some sense by "depositing angular momentum" – leaving an atom with Z electrons in a state with J_z increased by Z after a Dirac monopole passes through the center of an atom in the z direction. The mechanism is essentially the same as that by which it changes the current in an induction loop, or changes the relative angular momentum of a passing charge as was described simplistically at the beginning of section 1. However, the problem was first approached in a less sophisticated manner: The complexities (and realities) of atomic structure were replaced by a convenient electronic momentum distribution, and

interaction occurred only via the Lorentz force, i.e. through the induced electric field of the passing monopole. Previous knowledge of charged particle energy loss could then be extended to the monopole case. This picture has the advantage that one can deal with a complicated atomic or molecular system with reasonable confidence, and obtain what is probably a dependable lower limit to the actual rate of energy loss. We will first approach the problem in this way, then return to the problem of transitions to states of higher angular momentum and energy induced by a monopole slowly passing through an atomic system.

Most of those who build large PWC or scintillator arrays are high energy physicists, whose intuition about energy loss ($\mathrm{d}E/\mathrm{d}x$) is based on the Bethe formula [96]. At low velocities $\mathrm{d}E/\mathrm{d}x$ is a rapidly falling function of velocity ($\propto v^{-2}$), and above $v \approx 0.95c$ (or $\gamma \approx 3.2$) it rises slowly, as $\ln \gamma$ except for polarization corrections. This function accurately describes energy loss for $v \gtrsim 0.03c$, the velocity of a 0.5 MeV proton. Fortunately, other physics subcultures have long been interested in such problems as implanting heavy ions at controlled depths in silicon or efficiently detecting low energy neutrons, both of which require an understanding of energy loss at the velocities characteristic of a massive primordial monopole.

For the low-velocity region we must immediately make several distinctions of little importance at higher energies:

1. Inelastic atomic recoil contributes substantially to the total energy loss rate. Gas and scintillator detectors are sensitive only to excitation and ionization, so we are interested only in the "electronic" contribution to the total rate of energy loss. To simplify notation we will somewhat erroneously call this contribution $\mathrm{d}E/\mathrm{d}x$. It is sometimes conveniently normalized to $(\mathrm{d}E/\mathrm{d}x)_{\min} \equiv I_{\min}$, the minimum value of the Bethe function roughly characteristic of energy loss by cosmic ray muons.

2. Atomic electron velocity is not negligible. In the simplest approximations $\mathrm{d}E/\mathrm{d}x$ depends critically on the form of the electronic momentum wavefunction. In more sophisticated treatments the momentum wavefunction is allowed to distort during the energy-transferring interaction.

3. PWC's respond to ionized electrons, so either the atom must be ionized by the passing monopole or excited in such a way that it can ionize other atomic species present in the mixture.

4. Scintillators respond to excitation as well as ionization, but exhibit "saturation": the rate of light output ($\mathrm{d}L/\mathrm{d}x$) is not linear in $\mathrm{d}E/\mathrm{d}x$ because of radiation quenching in the highly ionized column of material near the particle trajectory. In the case of a scintillator we are interested in $\mathrm{d}L/\mathrm{d}x$, which again is conveniently referred to the minimum value obtained for relativistic particles with unit charge.

Finally, there will always exist some monopole velocity V below which electronic energy loss will not occur. For example, suppose that in the monopole's frame an atom of mass M approaches with velocity V, and that an energy ΔE is required to excite or barely ionize the atom. Since the kinetic energy of the atom after the excitation will be $\frac{1}{2}MV^2 - \Delta E$, the excitation cannot occur unless $V > \sqrt{2\Delta E/M}$. For helium, this threshold is $1.03 \times 10^{-4}c$. It is substantially lower for heavier atoms or molecules, but very often some other more restrictive threshold appears, such as that due to diamagnetic repulsion. In the "binary encounter" case to be considered first, the collision is considered as being between the monopole and an orbital electron, with the rest of the atomic or molecular system playing little role. The maximum energy which can then be transferred to an electron with mass m_e and velocity v_e is $2m_e v_e V$. For example, if the highest available electronic velocity is $c/137$ and the ionization energy is 5 eV, ionization cannot be produced by monopoles with velocities below $6.7 \times 10^{-4}c$.

4.1. Energy loss to electrons via the induced electric field

As we have indicated, energy loss mechanisms for charged particles (protons and heavier ions) are well understood both theoretically and experimentally down to $v \approx 10^{-3}c$. Following work by Fermi and

Teller [97], Lindhard and various collaborators [98] approximated the electronic structure of solids by a Fermi distribution in constructing a semiphenomenological theory. A review of this work, together with a survey of the experimental status of the problem, is given by Northcliffe [99], and a more recent overview given by Ahlen and Kinoshita [100] (AK hereafter). As the velocity of the incident ion decreases, fewer electrons are near enough to the top of the Fermi sea to be available for ionization, and a linear dependence of the rate of electronic energy loss upon ion velocity results. Departure from this linear behavior should occur somewhere below $v = 10^{-3}c$, because the electronic structures of real detectors, which are made of insulators, are inadequately described by Fermi distributions.

Energy loss data have been obtained for a variety of incident ions and absorbers down to below 4 keV incident energy, or $v \approx 3 \times 10^{-3}c$ in the case of protons [101]. The lowest velocity experiments known to us extend to $6 \times 10^{-4}c$ [102], although there are interpretative problems because of the unknown crystalline state of the thin carbon films which were used. In some experimental instances range-energy data (or measurements of electronic energy deposition vs. incident energy, or total light output vs. energy) were obtained. The slope of the smoothed data was then reported as e.g. stopping power, leading to be deceptively smooth "experimental data" shown in our fig. 10, by Ahlen and Tarlé [103], and elsewhere.

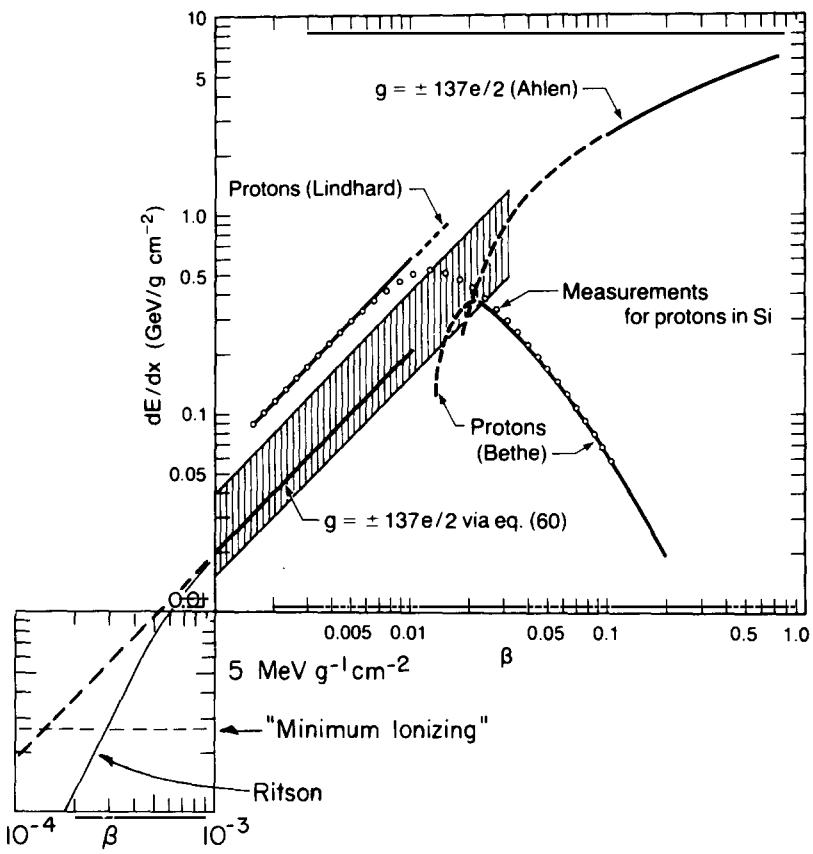

Fig. 10. Monopole energy loss as calculated by Ahlen and Kinoshita [100], and as extended by Ritson [105]. Except for the lower decade, the figure is adapted from ref. [100].

The step to energy loss by monopoles can be made in a minimal way. An electron experiences an induced electric field equal to gv times geometrical factors. For a slow monopole the relative velocity v is very close to the electron's velocity, which for an atomic electron is about $\alpha c \approx c/137$. Since $g = e/2\alpha$ for a Dirac monopole, $gv/c \approx e/2$. In other words, a slow monopole's interaction with an electron is the same as that of an electric charge $e/2$, and we should thus expect a slow monopole to be 1/4 as ionizing as a proton with the same velocity. AK used a slightly more sophisticated version of this argument, with a monopole version of the Rutherford cross section [104], in calculating the energy loss curve reproduced in fig. 10.

Extension below $v \approx 10^{-3}c$ is complicated by the energy gap of a scintillator or the ionization potential of a PWC gas. Ritson [105] has taken such effects into account in a rough way by (a) approximating the electronic structure by a Thomas–Fermi distribution and (b) requiring that the energy transfer in a collision be in excess of some gap energy G_0. In fig. 10 we show the effect of extending AK's curve for a decade by this method. Curves for $G_0 = 16$ eV (ionization) in argon and $G_0 = 4$ eV in carbon (excitation of scintillator) are given in Ritson's paper; a similar curve for $G_0 = 3$ eV in carbon has been published elsewhere [106]. On this basis a scintillation cutoff has been claimed for velocities below $1.4 \times 10^{-4}c$. Ahlen and Tarlé have argued on the basis of a Fermi distribution that the scintillator cutoff lies closer to $6 \times 10^{-4}c$ [103, 107].

In an attempt to understand the difference between these results, H.N. Nelson has compared several models for the electronic momentum distribution in plastic scintillator [108]. His results for (a) Ritson's Thomas–Fermi distribution, (b) Ahlen and Tarlé's Fermi distribution, (c) Hartree–Fock momentum waveform for carbon [109], and (d) a phenomenological distribution for polyvinyltoluene, based on measured Compton scattered line profiles [110], are shown in fig. 11. It seems likely that Ritson has overestimated the contribution of high-momentum electrons to $\mathrm{d}E/\mathrm{d}x$, while Ahlen and Tarlé have underestimated it. Using an extrapolation of the phenomenological distribution, Nelson obtains an effective cutoff in the vicinity of $3.7 \times 10^{-4}c$.

The issue is further confused by possible effects of light output saturation in plastic scintillator. Recently Ahlen et al. have investigated the light output of calibrated scintillator samples produced by proton recoils from scattered slow neutrons [111]. The neutron's scattering angle and time-of-flight were used to tag the proton energy. Results extend down to 400 eV. As described above, the data showing light output versus range data could be smoothed and differentiated to obtain $\mathrm{d}L/\mathrm{d}x$ – if only the range were known as a function of energy! Their results, using (a) a Lindhard–Scharf-Schiøtt range-energy relationship, and (b) a formula due to Brandt and Reinheimer [112] are shown in fig. 12. Also shown are $\mathrm{d}L/\mathrm{d}x$ data at somewhat higher velocities [113], and, for comparison, Ritson's $\mathrm{d}E/\mathrm{d}x$ curves for protons in carbon with and without a 4 eV gap. Effects of light output saturation are clearly evident in the Renner et al. data. Independently of all theoretical arguments, the fact that light is *seen* for 400 eV proton recoils demonstrates that charged particles with velocities somewhat below $10^{-3}c$ scintillate. Since there are interpretative difficulties with the lowest-velocity data, the cutoff is not experimentally demonstrated. It should be emphasized that the curves expected for monopoles (dash-dotted) is uncertain in both directions by a factor of three or so.

4.2. Atomic induction

Drell et al. [114] (DKMPR hereafter) have published an elegant and thorough treatment of slow monopole energy loss in atomic hydrogen and helium. They describe the adiabatic deformation of atom with Z electrons as the monopole passes within an impact parameter b of the nucleus along a path parallel

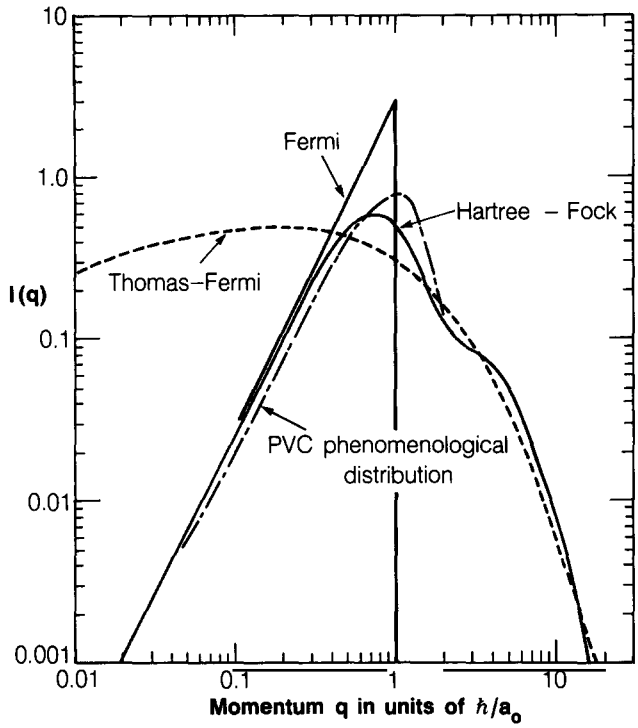

Fig. 11. Electronic momentum distributions relevant to plastic scintillator. Curves are for (a) the Thomas–Fermi distribution used by Ritson [105], (b) the Fermi distribution for carbon, using all the valence electrons, (c) Hartree–Fock electronic momentum distribution for carbon, and (d) a phenomenological distribution obtained using Compton scattered line profiles.

to the z axis. With a b-dependent probability it makes a transition to a state with J_z increased by Z and possibly with higher energy. The resulting energy loss rate for the monopole is an order of magnitude or more higher than that obtained by the methods of the previous section, and the velocity cutoff is at just above $10^{-4}c$.

Energy level shifts occurring during the passage are obtained by piecing together solutions obtained in various regions. When the monopole is far from the nucleus, the usual Zeeman perturbation exists. Exact solutions of the Schrödinger equation are available when the nucleus and monopole are coincident [104, 115]. Near the nucleus, energy level shifts from the $z = 0$ values can be obtained using a multipole expansion. (Only the dipole term is necessary to obtain the desired transition probabilities.) Solutions are then joined to obtain the energy level diagrams shown in fig. 13. As expected, m_j for a hydrogen state increases by one as the monopole passes, and for helium states it increases by two. Since states with different principal quantum numbers become degenerate as the monopole crosses the origin, the atom can be left in an excited state after the passage. For example, the helium ground state ($m_j = 0$) crosses to the 2^3P state with $m_j = 2$, which decays to the metastable 2^3S state.

The level degeneracy occurring when the monopole is at the nucleus is split when the impact parameter is non-zero. In the dipole approximation the transition probability is inversely proportional to the *slope* of $E(z)$ at $z = 0$, or $\langle (\mathrm{d}H/\mathrm{d}z)_{z=0} \rangle$. Better ways of obtaining a good estimate of this slope have led to several revisions of the excitation cross section reported for helium in the original paper [116, 117]. In particular, account must be taken of the non-zero separation of the monopole and nucleus in making the calculation. If the nucleus is considered as being at the origin (as was done in the original paper), the perturbation is a

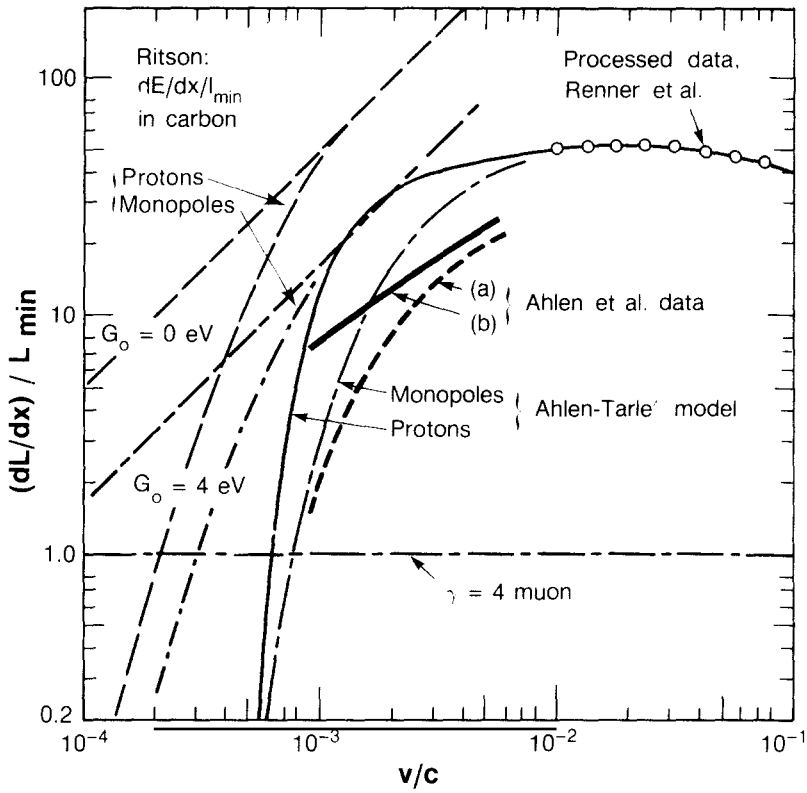

Fig. 12. Experimental data and Ahlen–Tarlé expectations for scintillator response to very slow protons [111]. Ritson's dE/dx curves for protons and monopoles in carbon [105] are also shown, as are smoothed dL/dx data for proton recoil as obtained by Renner et al. [113].

magnetic dipole. If the monopole is at the origin, it is an electric dipole. Clearly, the result must be the same either way – except when approximate wavefunctions must be used, as is the case. With improved functions and a stationary monopole, the group reported a reduction of 50% in the total excitation cross section for helium at the Monopole '83 conference [116]. A more recent calculation used variational wavefunctions with up to seventy terms [117], and the two methods of calculating the slope now agree to about 9%. The present best estimate of the total cross section is

$$\sigma = 3.5 \times 10^{-18}(\beta/10^{-4})(1-\beta_c^2/\beta^2)^{3/2}\ \mathrm{cm}^2\ ,$$

which is 30% below that originally reported by DKMPR. Here $\beta = v/c$, and the last factor, with $\beta_c = 0.929 \times 10^{-4}$, corrects for nuclear recoil. As mentioned above, the process has a threshold at $1.03 \times 10^{-4}c$. If ΔE is the excitation energy and there are n atoms per unit mass, then $dE/dx = n\sigma\,\Delta E$, so that for helium

$$dE/dx = 10.5(\beta/10^{-4})(1-\beta_c^2/\beta^2)^{3/2}\ \mathrm{MeV\ g^{-1}\ cm^2}\ .$$

Two-thirds of the excitation is to the metastable 2^3S state. One-third is to the 2^3P state, which usually de-excites to the metastable state. Given the difficulty of detecting the 1.15-eV de-excitation photon, how can the monopole's energy loss be detected? As it turns out, collisional energy transfer to another species

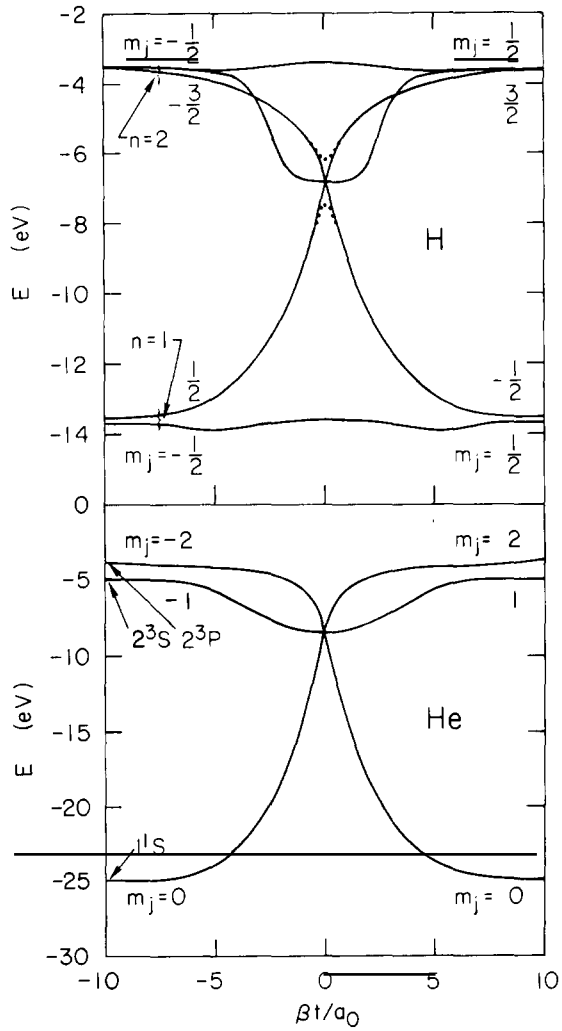

Fig. 13. Energy levels for hydrogen and helium atoms as a Dirac monopole passes through the atom in the positive z direction [114]. In the case of hydrogen with the monopole at the origin, the energy of the lowest triplet is half that of the normal ground state. According to the most recent calculations [117], the helium triplet energy at the cross-over is 9.01 eV.

present in the gas (the Penning effect) is known to be efficient [118], and helium plus a quenching gas is a perfectly adequate mixture for a proportional wire chamber. We might therefore expect large ionization effects if the ionization potential of the quenching gas were less than the de-excitation energy of the helium. This condition is easily met by a wide variety of commonly used quenchers, such as methane and carbon dioxide. Atomic induction excitation, followed by energy transfer to a species which becomes ionized,* thus forms the basis of all of the newer PWC monopole searches [119].

Present best estimates of energy loss rates in hydrogen and helium by atomic induction excitation are shown in fig. 14. For comparison, we show dE/dx for monopoles in carbon as calculated by Ritson. All are normalized to I_{min}.

* We abbreviate this long phrase as AI-ET (atomic induction excitation–energy transfer with excitation) in the subsequent detector discussion. The abbreviation is almost as unsatisfactory as the expression.

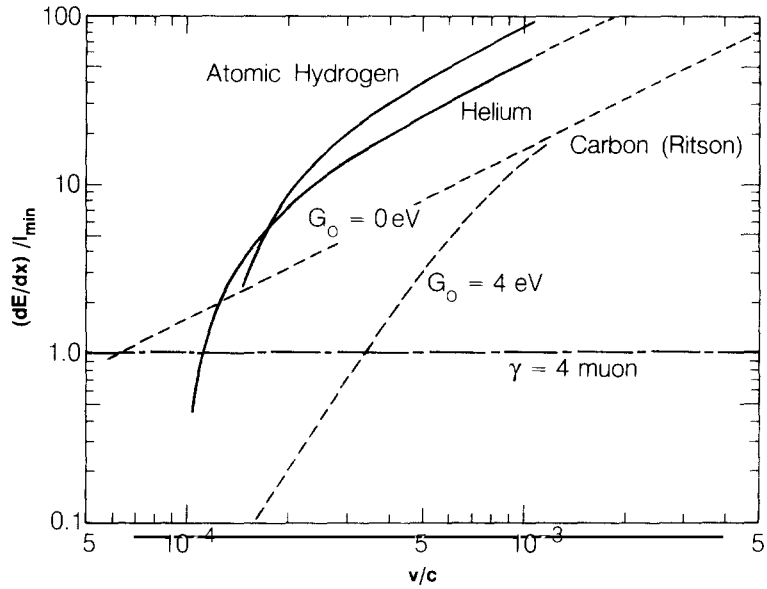

Fig. 14. Drell et al.'s energy loss rates for Dirac monopoles in hydrogen [114] and helium [117], scaled to $I_{min} = 4.22$ MeV g^{-1} cm^2 (for atomic hydrogen) and 1.94 MeV g^{-1} cm^2 (for helium). For comparison, we also show dE/dx for monopoles in carbon as calculated by Ritson [105] normalized to proton data at $v = 5 \times 10^{-3}c$.

Standard PWC gases use argon rather than helium, and in particular mixtures of argon with a suitable quencher (CH_4, CO_2, or n-pentane) were used in several monopole searches prior to DKMPR. Does the mechanism just described work with argon and other noble gases as well? In the opinion of Kroll and Ganapathi [117], the mechanism very likely works, but calculation of the cross sections is exceedingly difficult. In addition, the lower velocity threshold implied by the more massive nucleus probably cannot be realized because of diamagnetic repulsion; the threshold in argon might even be higher than in helium. Given these considerations and the ease of constructing PWC's filled with helium with a convenient quencher, there is little motivation for using argon in the new detectors.

One important caveat deserves repeated emphasis: Atomic induction obviously works if the monopole is a dyon, or if it carries a bound proton or heavier nucleus – except that the electrostatic interaction is very important. In the case of positive dyons or monopole-proton bound states, the net effect is to reduce the excitation cross section to such a degree that the effect is uninteresting for practical detectors [116]. Conversely, a negative dyon has a very large cross section for ionizing helium, down to just above $10^{-4}c$. It has been elsewhere that most monopoles acquired a proton just after the element synthesis era in the early universe [120]. A negative dyon should be even more likely to have done so, but would then appear as an uncharged monopole. Among all of these possibilities, we conclude that atomic induction will only be useful for a bare monopole or a negative dyon with a bound proton. Any large new ionization detector should therefore cover both possibilities, by having an "uncharged monopole" AI-ET trigger to provide coverage down to almost $10^{-3}c$, and an alternate scintillator trigger, in case the monopoles have a positive electric charge.

Most of the reported PWC experiments suffer from an additional problem: Even with the likely existence of atomic induction in argon, the mechanism is unobservable because the ionization potential of most of the quenchers is larger than the de-excitation energy of the argon metastable state.*

* An exception is n-pentane, used in the NUSEX detector [121].

Atomic induction might occur with a useful cross section in more complicated molecular systems, but the computational problem is formidable. Even before the DKMPR calculation, McIntyre and Webb [122] discussed the possibility that excitations from the singlet ground to the triplet excited state might occur in molecules of the kind found in plastic scintillator. Since the triplet state is long-lived, they expected interaction between pairs of triplet states to excite a singlet state which would decay with detectable photon emission. Their detector, based upon this mechanism, is now in operation.

5. Track-etch experiments

An electrically or magnetically charged particle will inevitably leave behind it a trail of local radiation damage as it traverses matter. In a wide class of dielectric materials, the damaged region is more chemically reactive than the surrounding undamaged material. Suitable chemical etching can produce a visible track, or even a tiny hole which can be found with a leak detector. Annealing times for the damage are very long at ordinary temperatures, and such material can be deployed over large areas very cheaply. On the other hand, only extreme ionization will produce an etchable track, so the potentially large $\int \mathrm{d}A\,\mathrm{d}\Omega\,\mathrm{d}t$ is useful only for very fast monopoles, or for slow monopoles bound to atomic nuclei.

The development of track-etch techniques has mostly followed the work of Fleischer, Price and Walker [123, 124], although there were several earlier observations of etched tracks [125]. Practical detectors range from a variety of common plastics (cellulose nitrate, polycarbonates such as Lexan and CR-39, etc.) to naturally occurring mica, where the integration time can be very long. The basic damage mechanism is quite different in the two cases: In a polymer, electronic energy loss results in broken polymer molecules and new cross-linkages. In a crystalline material such as mica, the nuclear recoil part of the energy loss (the part specifically ignored in section 4) dominates at low velocities, where our primary interest lies.

In section 4 we observed that the passage of a monopole with charge g and velocity v produces the same electric field as a static electric charge $q = gv/c$, except that the field points in a different direction. In the context of that section, v was mostly the atomic electronic velocity ($\approx \alpha c$), and the equivalent electric charge was $e/2$ for a Dirac monopole. For higher velocities, $q \approx 69(v/c)e$. Even at $0.1c$, we expect a monopole to produce about 50 times minimum ionization. A fast monopole thus appears as a highly ionizing penetrating particle – much more penetrating than a high-Z nucleus with which it might be confused. This signature has been the basis for several of the older searches, and for at least one "discovery". In the present context, most plastic track-etch detectors are sensitive to monopoles with velocities down to just below $0.01c$, depending upon experimental details.* The results of three recent experiments of this sort have been published:

1. *Berkeley 1981* (Kinoshita and Price [126]). A CR-39 exposure on White Mountain resulted in a limit at $1.6 \times 10^{-13}\ \mathrm{cm^{-2}\,sr^{-1}\,s^{-1}}$ for $v > 0.02c$, if we assume their solid angle was 2π. This and other track-etch flux limits are shown in fig. 7.

2. *Berkeley 1983* (Barwick et al. [127]). Despite some experimental problems which resulted in reduced sensitivity, the velocity threshold of this second CR-39 exposure was $0.007c$. The flux limit was $10^{-12}\ \mathrm{cm^{-2}\,sr^{-1}\,s^{-1}}$.

3. *Japan* (Doke et al. [128]). A collaboration from several Japanese universities has exposed $100\ \mathrm{m^2}$ of cellulose nitrate for 3.3 years. They obtain a flux limit of $5 \times 10^{-15}\ \mathrm{cm^{-2}\,sr^{-1}\,s^{-1}}$ for $v > 0.04c$.

Price has recently pointed out that (a) plastics such as CR-39 are also sensitive to monopoles in a small low-velocity window just below $10^{-4}c$, and (b) if, as some expect, monopoles arrive with a bound proton

* The exception appears to be Japanese CR-39, discussed below.

[120], then such plastics are sensitive over a very wide monopole velocity range [131]. He re-interprets the earlier Berkeley experiments to obtain the velocity-dependent limits also shown in fig. 7.

A University of Tokyo group has deployed 100 m^2 of CR-39 underground; analysis of the one-year exposure will start in January 1986. An additional 300 m^2 will soon follow, and approval has been obtained for a 5000 m^2 array. By using Japanese CR-39 with extremely uniform thickness they are able to etch very heavily, leaving only about 15% of the material. Calibrations with Bevelac beams have shown that their CR-39 is also more sensitive than that used by Price [124]. Assuming the monopole energy loss rates given by Ahlen and Kinoshita [100], they find a threshold at $1.0 \times 10^{-3}c$. Their planned three-year exposure of the large array should reach galactic monopole flux bounds below 10^{-16} cm^{-2} sr^{-1} s^{-1} [129, 130].

By far the most interesting results in the area have come from searches in old mica [8, 132–135], where the integration times have been close to 500 Myr. Price and his co-workers argue that a monopole traversing rock captures a nucleus with a large magnetic moment, the most common candidate being ^{27}Al. Mica is not a terribly sensitive track-etch detector, but the resulting bound state leaves an etchable record for velocities in a broad region near $10^{-3}c$. The procedure has been to cleave a cut sheet of mica, then to separately etch two or three ~100 μm sheets. The mica contains (a) ~0.01 μm tracks produced by nuclear recoils when U and Th impurities α-decay, (b) uranium fission fragment tracks, typically ~20 μm long, and (c) ~0.5 μm tracks, made by nuclear recoils when Al and Si are struck by α particles from ^{212}Po decay. This newly-discovered class of recoils is particularly interesting, in that they should produce the same kind of radiation damage expected of magnetic monopoles [135]. In particular, they should anneal in the same way. Nearly 1000 m^2 of mica has now been scanned. A few accidental fission track stub line-ups have been found, but none show aligned tracks in three sheets. The frequency of these accidental events is as calculated.

There have been several discussions of possible loopholes [132–134]. There now seems to be little question about the cross sections for nuclear capture,* the age of the mica, or its average depth underground during exposure. Several remaining problems deserve comment:

1. It was considered possible that monopole tracks might anneal at a different rate than the recoil and fission fragment tracks used to corroborate the age-dating. Monopole damage should consist almost entirely of point defects, while α-decay recoils produce extended damage characteristic of electronic loss. In contrast to both, fission fragments produce such extensive damage that annealing would be difficult. As mentioned above, the newly-discovered tracks due to atoms struck by α particles should anneal in nearly the same way as monopole tracks. There is some indication that the densities of both kinds of recoil tracks are slightly lower than expected (as normalized to the fission track densities), but the effect is certainly minor. The track-fading question appears to have been answered.

2. Bracci and Fiorentini have argued that most monopoles would have captured protons at an early epoch [120]. If so, they could not capture high-Z nuclei while going through the rock above the mica, and would not leave detectable tracks. After correction for an error in the Bracci and Fiorentini paper, it now estimated that 15% to 98% of the monopoles arrive with attached protons [133]. At worst, Price's mica limits would be increased by a factor of 50 if the estimates are now correct. The physics of this epoch ($kT \sim 50$ keV, between the light-element formation era and the matter-radiation decoupling time) is well understood. However, the correction factor, thought to be of O(10) to O(100), is exponentially sensitive

* In principle, one calculates the photodisintegration cross section for the bound state, then applies detailed balance to find the cross section for the inverse reaction. The wavefunctions are reasonably well known, except for some questions concerning the interaction at nuclear distances.

to small changes in the parameters, especially to the poorly-known monopole–proton binding energy [18, 134]. Given the importance of this experimentally elusive point, we remain somewhat apprehensive.

3. Similar problems arise if monopoles manifest themselves as dyons. Positively charged dyons would avoid ^{27}Al capture because of electrostatic repulsion, while negative ones would tend to capture the first available nucleus – possibly even atmospheric nitrogen. The charge of the captured nucleus might be too low for track production in mica.

4. If there is appreciable water (~4 km equivalent) above the mica during much of the exposure time, then proton capture could occur most of the time. Since continental plate material does not occur under deep oceans, we consider this possibility unlikely.

5. Catalyzed nucleon decay (except perhaps via the weak anomaly) would prevent survival of bound states for long enough to produce mica tracks. As stated earlier, we regard the mica limit and astrophysical catalysis limits as exclusive – if catalysis exists, the mica limit is unnecessary.

The absence of signal implies the velocity-dependent flux limit labeled "mica" in fig. 7, where the possible correction for monopoles arriving with bound protons is indicated by the higher dotted curve. We have plotted the most recent result [133], improved by a factor of 70 from the limit published earlier [8]. The velocity dependence results from several factors: Since the etch rate is more than 50 times faster parallel to the cleavage plane than normal to it, sensitivity varies with angle, and hence the effective solid angle varies with the nuclear part of the energy loss rate. At high velocity this rate decreases, while at low velocities diamagnetic repulsion introduces a threshold at $3 \times 10^{-4}c$. Taken at face value, this single experiment sets a flux limit nearly four orders of magnitude below the Parker bound for galactic monopoles ($v \approx 10^{-3}c$), and a factor of 10^5 below the best scintillator and proportional wire chamber limits.

6. Scintillator experiments

Organic scintillators and gas-filled proportional wire chambers (PWCs) can be deployed over large areas at a reasonably modest cost, and have long been used for cosmic ray work. Several large detectors were therefore already in operation in 1982, when the possibility of slow monopole detection occurred to most of us. The electronics for these detectors had been built assuming $v \approx c$, so that slow monopoles would have previously escaped detection. Electronic modifications were quickly made, and in at least one case data were being obtained less than two weeks after the conversion was first discussed. Since that time, several large detectors have been built, and even larger ones are planned. Most of the new detectors have multiple physics goals.

Such detectors are sensitive to any ionizing particles. The surface intensity of cosmic-ray muons is about $10^{-2}\,\mathrm{cm}^{-2}\,\mathrm{sr}^{-1}\,\mathrm{s}^{-1}$, but drops off rapidly underground, reaching $1.5 \times 10^{-11}\,\mathrm{cm}^{-2}\,\mathrm{sr}^{-1}\,\mathrm{s}^{-1}$ at $7000\,\mathrm{hg\,cm}^{-2}$, the depth of the Kolar Gold Fields (KGF) detector. Shallow experiments must electronically eliminate cosmic ray triggers, and therefore are usually not sensitive to high-velocity monopoles. The veto requirement can be somewhat relaxed deep underground, where cosmic ray events are less frequent.

In section 4 we discussed electronic energy loss for slow monopoles, with the conclusion that monopoles would not produce detectable signals if their velocities were below some threshold, somewhere between $10^{-3}c$ and $10^{-4}c$. The details varied between scintillators and PWCs. There are other differences. Scintillators are in general faster (~10 ns pulses), and at $10^{-3}c$ a monopole spends 30 ns crossing a 1 cm scintillator. Some of the liquid scintillator modules in use are 30 cm thick. Since a

discriminator is normally designed assuming pulse integration over a very short time, the monopole signal, presented as a series of single-photoelectron pulses spread over a long time, might for this reason alone fall below detection threshold. For these and other technical reasons, we find it useful to divide our discussions of scintillator and PWC experiments.

Scintillator array (or scintillator triggered array) results have been reported by nine groups. At least two new experiments will soon run, and the proposed Gran Sasso experiment (section 8) uses scintillators as well as PWC's and track-etch detectors. The reported results, all upper limits, are shown in fig. 15. Individual comments follow.

1. *Bologna* [136, 137]. For reasons of background rejection in this surface-level detector, the discrimination threshold was at about 20 times the ionization produced by relativistic cosmic ray muons, or $20I_{\min}$. The detector was enlarged after the first publication to 38 m^2 sr. Lower velocity limits varied in different runs from $0.001c$ to $0.007c$; for the runs with $v_{\min} = 0.001c$ the ionization thresholds were at $10I_{\min}$. Size changes, electronics changes, and geometry all contribute to the v-dependent flux limit shown in fig. 15. The final limit was about 15% below that reported in ref. [137].

2. *Tokyo* [138–140]. A small (1.1 m^2 sr) 6-layer surface detector with a $1.2I_{\min}$ threshold was used to obtain the data shown as "Tokyo I" and "Tokyo II". The difference was that in the second case the velocity window was $2\times10^{-2}c$ rather than $0.01c < v < 0.25c$. We would expect a dE/dx-imposed threshold at $3\times10^{-4}c$ to $7\times10^{-4}c$, on the basis of our discussion in section 4. A much larger array ($A\Omega = 22$ m^2 sr) located 250 m underground at Kamioka was used to obtain the "Tokyo III" limit [140, 141]. It had a threshold of $0.06I_{\min}$ for $v > 0.01c$, and $0.25I_{\min}$ for $3\times10^{-4}c < v < 0.01c$. In the original

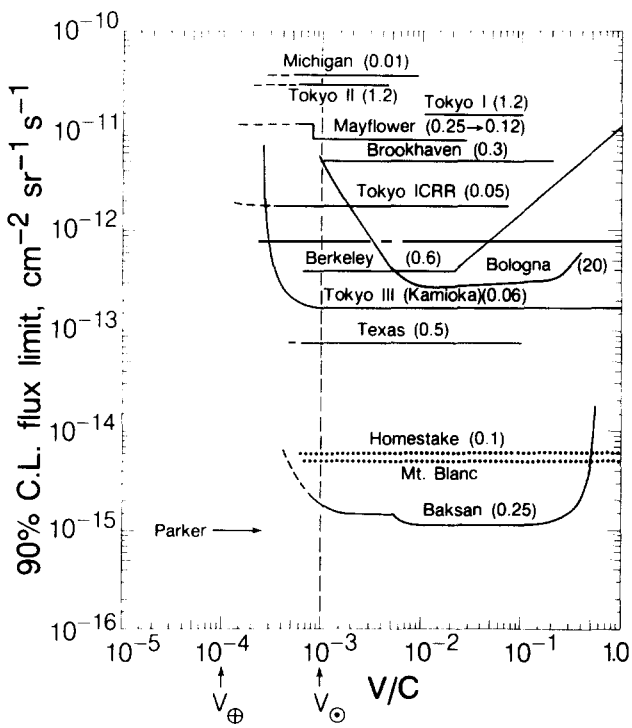

Fig. 15. Experimental monopole flux bounds obtained with scintillator arrays. Reported ionization thresholds in units of $I_{\min}$ are shown in parentheses; in some cases higher thresholds were used for the high-velocity regions. Dotted lines indicated one-year limits for planned experiments.

configuration with six horizontal scintillator layers, it achieved a flux limit of 6×10^{-13} cm^{-2} sr^{-1} s^{-1}. It has since been re-arranged into a larger two-layer detector, and the present null result (September 1985) implies $F \lesssim 1.7 \times 10^{-13}$ cm^{-2} sr^{-1} s^{-1} [141].

3. *Baksan* [142, 143]. This enormous ($A\Omega = 1850$ m^2 sr) detector located 850 hg cm^{-2} underground in the Baksan Mountains has been used to set the best available scintillator flux limit on galactic monopoles. Figure 16 shows the detector in some detail. Gross features are from an early publication [144], while the arrangement of the liquid scintillator cans and concrete absorber are shown with some accuracy [145]. The original electronic monopole velocity threshold was $4 \times 10^{-3}c$ [142], but modifications after the first half-year of operation reduced it to $2 \times 10^{-4}c$. The actual threshold is set by pulse width (50 ns integrators precede the voltage-sensitive discriminators), discriminator thresholds ($0.25I_{\min}$ for a relativistic particle), and estimated $\mathrm{d}E/\mathrm{d}x$ for monopoles. With 773 days of observation, $F \lesssim 1.9 \times 10^{-15}$ cm^{-2} sr^{-1} s^{-1}, at the 90% C.L.

At $10^{-3}c$, a normally incident monopole crosses a scintillator plane in 1 μs. The 50 ns integration time means that the average pulse size is reduced by a factor of 20, compared with that produced by a fast particle with the same $\mathrm{d}E/\mathrm{d}x$. The $0.25I_{\min}$ muon threshold thus becomes $5I_{\min}$ for a monopole at $10^{-3}c$. The effective threshold is fairly independent of angle, since the energy deposit per unit time remains the same. From fig. 12 it can be seen that a bare monopole at this velocity should produce somewhere between $5I_{\min}$ (Ahlen) and $10I_{\min}$ (Ritson). Ahlen expects the Baksan detector to become insensitive to monopoles just below $10^{-3}c$ [146], while models without a truncated momentum distribution for atomic electrons lead to a slightly lower velocity for the sensitivity cutoff. In any case, it seems clear that (a) the Baksan detector is fully sensitive to bare monopoles down to about $10^{-3}c$, and (b) the sensitivity drops rapidly at smaller velocities. The conclusion is impressive: for monopoles with or without associated

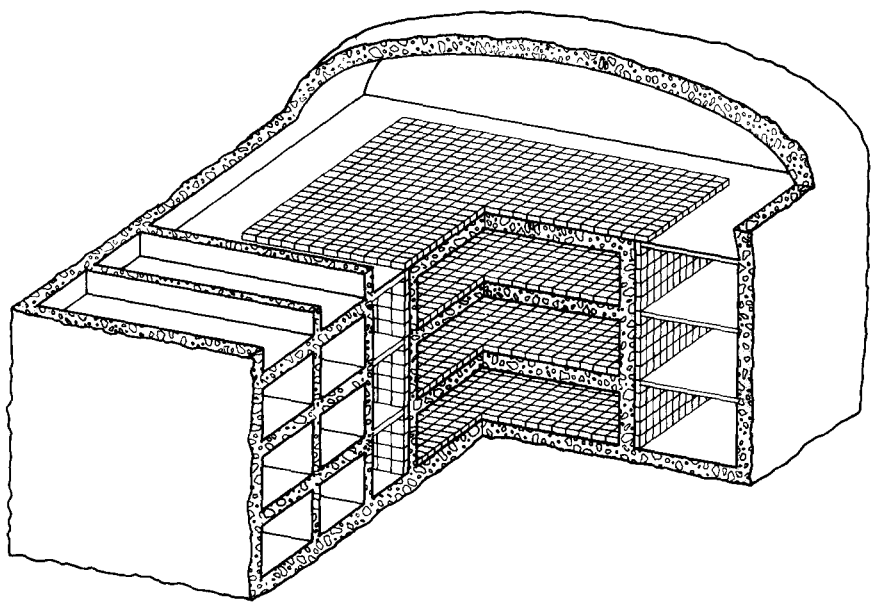

Fig. 16. A cutaway view of the Baksan detector. Each liquid scintillator is 70 cm × 70 cm × 30 cm. The top layer consists of 24 × 24 such counters, while the other horizontal layers are 20 × 20. Vertical walls are 15 high; two are 22 wide and the others 24 wide. There are practically no gaps between scintillators. The walls of the central concrete absorber/support are 80 cm thick. The entire array, 16 m × 16 m × 11 m, is the size of a large 4-story building.

electric charge, the flux at the local virial velocity in the galaxy is no more than a factor of two above the Parker bound.

4. *Mayflower* [106]. A small 3-layer detector 507 hg cm^{-2} underground in the Mayflower Mine (Utah) initially operated with $\sim 0.25 I_{min}$ thresholds. Pulse integrators were then introduced to permit velocity-independent triggering, and thresholds were reduced to about $0.12 I_{min}$. Their estimated velocity lower limit ($1.4 \times 10^{-4} c$) is based upon Ritson's excitation curves; it should probably be somewhat higher.

5. *Michigan* [147]. A 5-layer surface array was set to trigger at the single photoelectron (p.e.) level. Since 150–200 p.e.'s were obtained per minimum ionizing muon traversal, they report a threshold of $0.01 I_{min}$.

6. *Berkeley* [146]. A single thick slab of naphthalene-based scintillator subtending 17.5 m^2 sr was viewed by 52 photomultipliers in this surface-level experiment. The authors have argued that this scintillator has a lower velocity cutoff than the conventional polyvinyltoluene type [103]. Pulse shape discrimination was used to eliminate cosmic rays and measure monopole velocity in the range $5 \times 10^{-4} c$ to $4 \times 10^{-3} c$. Since ~5000 p.e.'s were obtained per muon traversal, the effective threshold was quite low. As of October 1983 no viable candidates had been seen, for a flux limit of 4.1×10^{-13} cm^{-2} sr^{-1} s^{-1}. We seriously doubt the final two sentences of the paper.

7. *Tokyo Institute for Cosmic Ray Research* (ICRR) [148]. The first stage of the experiment (which later used a He–CH_4 PWC trigger, as reported below) used a scintillator trigger with thresholds at $0.05 I_{min}$. The arrangement of scintillators, PWC's, and absorber is shown in fig. 17. A flux limit of 1.8×10^{-12} cm^{-2} sr^{-1} s^{-1} has been reported for $2.5 \times 10^{-4} c < v < 0.1c$. The lower limit relies upon Ritson's excitation calculations and should probably be doubled.

8. *Brookhaven Neutrino Detector* (BNL–Brown–KEK). The trigger of an existing neutrino detector at Brookhaven [149] was modified to accept monopoles with $10^{-3} c \lesssim v \lesssim 0.2c$ [150]. Each of the 112 vertical modules contained a 422 cm × 409 cm plane of small liquid scintillator counters (used for the monopole trigger), as well as two planes of PWC's. No interesting events were seen in a 35.5 day run with this 14.5 m^2 detector, for $F \lesssim 5.2 \times 10^{-12}$ cm^{-2} sr^{-1} s^{-1}.

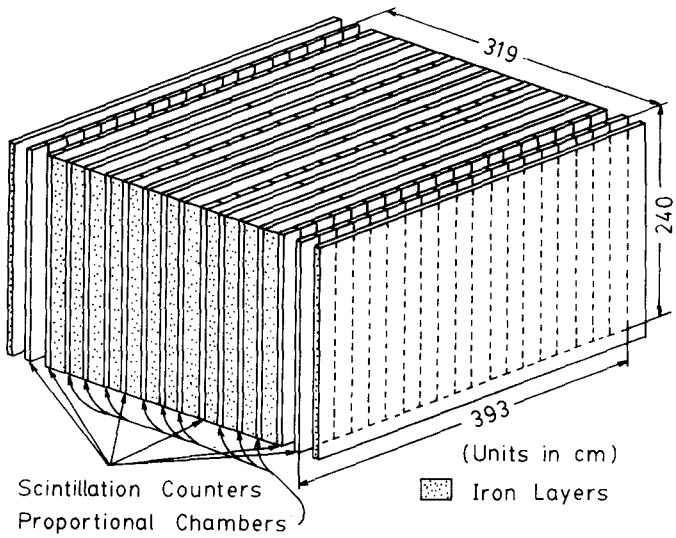

Fig. 17. The ICRR array in Tokyo. It originally used a scintillator trigger, but was then converted to use a He–CH_4 PWC trigger, to set the first AI-ET limits.

9. *Texas A. & M.* [122]. A three-layer arrangement of 182 cm × 182 cm acrylic scintillators with a total aperture of 330 m^2 sr is located in a salt mine 500 hg cm^{-2} underground. Using 1 cm scintillator and a BBQ light collection system, only 2 or 3 p.e.'s are collected for each miminum ionizing particle, resulting in a fairly high threshold. As was mentioned at the end of section 3, they expect delayed light emission due to triplet excitations thought to dominate the energy loss process, and trigger on both a fast threshold at 1 p.e. and a delayed threshold at several p.e.'s. On the basis of 2500 hours of operation, the reported flux limit is 7.7×10^{-14} cm^{-2} sr^{-1} s^{-1} (90% C.L.) for $6 \times 10^{-4}c < v < 0.01c$.

10. *Homestake* (U. of Pennsylvania and BNL) [151]. A liquid scintillator "box" surrounds Davis' ^{37}Cl solar neutrino detector, 4200 hg cm^{-2} underground in the Homestake Mine (South Dakota). As shown in fig. 18, it consists of 200 detectors, each 30 cm × 30 cm × 800 cm. Each is viewed from both ends, so that longitudinal position may be obtained from relative pulse timing. Scintillator quality and light collection efficiency are such that a muon produces about 350 photoelectrons. Thresholds have tentatively been set at $0.1I_{min}$. The sophisticated electronics is designed for several physics goals. Transient recorders monitor the long pulse shapes expected from slow monopoles. The electronic velocity window is from $10^{-4}c$ to $1.0c$. For the reasons discussed in section 4, the actual detection threshold will be $6 \times 10^{-4}c$ or somewhat less. The south half of the detector was working as of October 1985, and the rest will be commissioned soon. With an aperture of 1200 m^2 sr the array should set limits at 2×10^{-15} cm^{-2} sr^{-1} s^{-1} within three years, providing a welcome compliment to the Baksan detector.

11. *Mt. Blanc Large Volume Scintillator* [152]. An Italian–Russian collaboration has built a large multipurpose detector 5200 hg cm^2 underground in the Mt. Blanc. It consists of 72 liquid scintillators, each 1.0 m × 1.5 m × 1.0 m, arranged in three layers. All pulses with ≥1 p.e. will be recorded in the time window around a monopole trigger, and a flux limit at 5×10^{-14} cm^{-2} sr^{-1} s^{-1} should be set after its first year of operation.

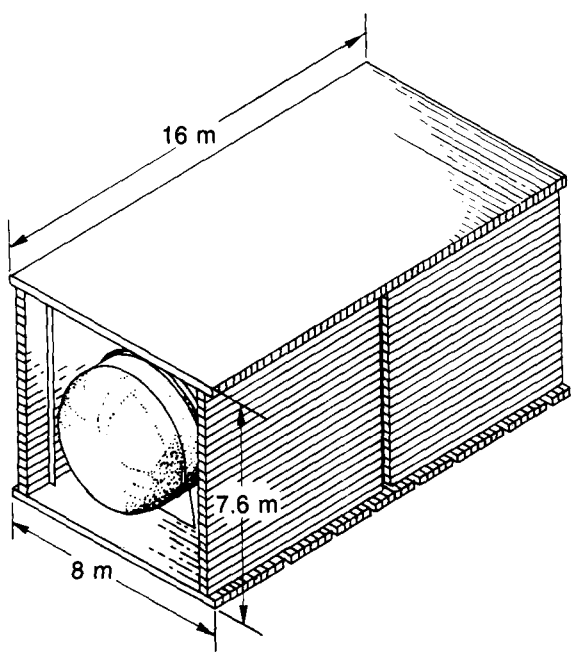

Fig. 18. The Homestake large area liquid scintillation detector. The two hundred boxes, each 30 cm × 30 cm × 800 cm, are filled with extremely transparent liquid scintillator and viewed on both ends with 12 cm diameter photomultipliers.

These experiments differ in so many ways that it is difficult to make overall comparisons. In any case, the combined limit at the galactic monopole velocity, $10^{-3}c$, is totally dominated Baksan result, $F \lesssim 1.9 \times 10^{-15}\,\mathrm{cm}^{-2}\,\mathrm{sr}^{-1}\,\mathrm{s}^{-1}$.

7. PWC experiments

The comparatively low cost of PWC detectors make them even more attractive choices than scintillators for large-aperture arrays. However, the first experiments, with tubes filled with the usual argon-plus-quencher mixtures, may not have been as sensitive to slow monopoles as was hoped. For example, Ritson's curves for ionization in argon suggest that Ullman's pioneering experiment [153] was insensitive to monopoles over the entire velocity window set by the electronics. If the atomic induction mechanism were operative the experiment would still be insensitive because the ionization potential of methane (13.0 eV) is greater than the argon metastable excitation energy (11.6 eV). We do not wish to conclude that these searches were invalid for $v < 10^{-3}c$, but merely that there are problems in the context of present first steps toward understanding energy loss by slow monopoles. The newer detectors have made explicit use of atomic induction excitation followed by energy transfer to a quencher which becomes ionized (AI-ET), as discussed in section 4, and as such promise to set the most trustworthy non-inductive limits. We repeat an earlier caveat: AI-ET does not work for monopoles carrying a positive electric charge. In this case a PWC will work in the normal way, with sensitivity down to just below $10^{-3}c$.

As with other techniques, the results are negative. PWC flux limits obtained by nine groups are shown in fig. 19, with the heavier lines for the AI-ET results. Detailed descriptions follow:

1. *Brookhaven* (Ullman [153]). The modest limit set by this experiment is offset by the fact that it was by far the earliest, even antedating Cabrera's. A 3-layer surface array of argon-methane chambers subtended $1.8\,\mathrm{m}^2\,\mathrm{sr}$ for 2-way incidence. The threshold was at $2I_{\min}$, and the velocity window was $3.3 \times 10^{-4}c < v < 1.2 \times 10^{-3}c$.

2. *Soudan* [154, 155]. This underground ($1800\,\mathrm{hg\,cm}^{-2}$) experiment makes use of a massive proton decay array ($A\Omega = 103\,\mathrm{m}^2\,\mathrm{sr}$) with 48 layers of A–$CO_2$ filled PWCs. A high ($16I_{\min}$) threshold is used to set limits for $v > 10^{-2}c$, while for $2 \times 10^{-3}c < v < 10^{-2}c$ the threshold is $0.5I_{\min}$.* The analysis is unique in that the authors completely incorporate the possibility of nucleon decay catalysis. Following the Occam's razor criterion introduced earlier, we consider only $f_0 = 0$ (no catalysis) in this section, and in fig. 19 show a flux limit just under $10^{-13}\,\mathrm{cm}^{-2}\,\mathrm{sr}^{-1}\,\mathrm{s}^{-1}$.

3. *Kolar Gold Fields* [156]. This $250\,\mathrm{m}^2\,\mathrm{sr}$ array, operated by a Japanese–Indian collaboration very deep underground in the Kolar Gold Fields, consists of 34 PWC layers filled with 90% argon and 10% methane. Monopoles are identified by (a) $\mathrm{d}E/\mathrm{d}x$ (952 days), for which uniform ionization $\geq 2.5I_{\min}$ is required in at least 12 layers, and (b) time-of-flight (623 days), applicable when $7 \times 10^{-4}c < v < 4 \times 10^{-3}c$ and $\mathrm{d}E/\mathrm{d}x > 0.25I_{\min}$. The $\mathrm{d}E/\mathrm{d}x$ trigger admits monopoles down to $7.5 \times 10^{-4}c$, but the high ionization requirement is thought to raise the effective threshold to $1.3 \times 10^{-3}c$. We show the combined limit in fig. 19, again assuming the absence of catalysis.

4. *Osaka* [157]. Groups from two universities in Osaka have operated a surface detector with an aperture of $4.6\,\mathrm{m}^2\,\mathrm{sr}$. In the first phase of the experiment it contained 5 layers of PWC's filled with an A–CH_4 mixture, and set a limit at $1.5 \times 10^{-12}\,\mathrm{cm}^{-2}\,\mathrm{sr}^{-1}\,\mathrm{s}^{-1}$ (Osaka I). Two additional layers were added, the gas mixture was changed to He–CH_4, and the threshold raised from $0.05I_{\min}$ to $7I_{\min}$. A limit

* In the first publication, $10^{-3}c$ is given as the lower limit.

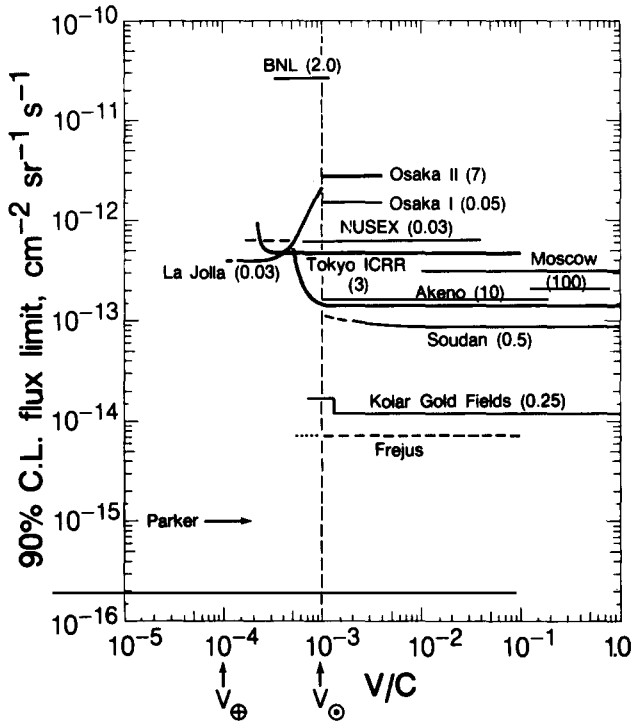

Fig. 19. Experimental monopole flux bounds obtained with proportional wire counter arrays. Reported thresholds (in units of I_{min}) are shown in parentheses. For experiments with multiple thresholds, the one effective at $10^{-3}c$ is given. Heavy lines indicate limits obtained utilizing atomic induction in helium and the Penning effect (AI-ET), and the dotted line shows the limit expected from the Frejus experiment after one year.

of 2.8×10^{-12} cm^{-2} sr^{-1} s^{-1} has been set with the new configuration (Osaka II). In both cases the electronic velocity window was between $1 \times 10^{-4}c$ and $4 \times 10^{-4}c$.

5. *NUSEX* [158] (Mont Blanc proton decay detector). The detector consists of 134 limited streamer tube planes filled with A–CO_2–n-pentane and separated by 1 cm thick iron plates. Since the tubes are sensitive to single electron–ion pairs and a minimum ionizing particle produces about 30 pairs, the single-tube threshold is about $0.03I_{min}$. The aperture is 9.5 m^2 sr. The monopole trigger electronics admits particles with v between $10^{-4}c$ and $0.05c$; during the first third of the livetime it permitted triggers only for downward-going monopoles. A minimum of nine aligned planes are required for a trigger, and most recorded events were in this category. As of April 1984 a flux limit of 6.4×10^{-13} cm^{-2} sr^{-1} s^{-1} had been established. It is especially interesting to note that if atomic induction excitation occurs in argon this detector should be sensitive very nearly to the lower electronic threshold, since the n-pentane would be ionized by energy transfer from the metastable argon.

6. *Tokyo ICRR* [159]. This 11.0 m^2 sr surface detector was the first of the new-generation AI-ET PWC arrays; it is shown in fig. 17. After initial operation with a scintillator trigger (discussed in the last section) the PWC's were filled with He–CH_4 (10%) and used in the trigger, a 6-fold delayed coincidence in either direction. Thresholds were at $3I_{min}$. The electronic velocity window extended from $10^{-4}c$ to $0.1c$, so that from fig. 14 we might expect sensitivity above $2 \times 10^{-4}c$. Operation ceased in late 1984, after a limit of 4.8×10^{-13} cm^{-2} sr^{-1} s^{-1} was obtained [160].

7. *La Jolla* [161]. Masek et al. have built a prototype module for what is hoped will be a large and economical AI-ET array. It consisted of three 1 m wide planes made up of 7.3 m long aluminum

extrusions. Each extrusion has two layers of 2.5 cm × 2.5 cm square tubes, one layer offset by half a tube width from the other. After correction for geometrical efficiency (a 6-layer trigger is required), the aperture is 36 m^2 sr.* With a He–CH_4 gas mixture and a threshold at $\frac{1}{3}I_{min}$, the expected velocity threshold is $1.1 \times 10^{-4}c$. The electronics is optimized for low-velocity monopoles, where a limit of 4.0×10^{-13} cm^{-2} sr^{-1} s^{-1} is obtained, and the effective aperture decreases to a cutoff at $v = 10^{-3}c$. A new version has since been built, with six 7.3 m × 7.3 m double planes. Alternate double planes are crossed to provide two-dimensional track location. The electronics have been modified to provide constant aperture up to $3 \times 10^{-3}c$. Operation by early 1986 is expected.

8. *Akeno* [162]. Hara et al., also at the Tokyo ICRR, modified the large (130 m^2 sr) calorimeter of the Akeno air shower array to function as a AI-ET detector. The electronic velocity threshold is $4.1 \times 10^{-4}c$, but with a threshold at $10I_{min}$ the aperture decreases rapidly below $10^{-3}c$. A monopole flux limit at 1.4×10^{-13} cm^{-2} sr^{-1} s^{-1} was obtained after the first 145 days of operation.

9. *Frejus* [163]. The 6 m × 6 m × 13 m nucleon decay experiment under construction deep underground in the Frejus Tunnel contains 1000 flash-tube planes, for an aperture of 1000 m^2 sr. Since the tubes are filled with Ne–He, excitation via atomic induction cannot be observed. The 124 planes of Geiger tubes, used to trigger the apparatus, are filled with A–C_2H_5OH (2%). The electronic window is evidently $10^{-4}c < v < 0.1c$, but energy-loss considerations probably limit the threshold to just under $10^{-3}c$. The expected one-year flux limit, 7.3×10^{-15} cm^{-2} sr^{-1} s^{-1} is shown by the dotted line in fig. 19.

10. *Moscow* [164]. A 6-layer surface array was used to search for very heavily ionizing events ($>100I_{min}$) for 2.5 years, establishing a limit at 3.1×10^{-13} cm^{-2} sr^{-1} s^{-1} for $v > 0.01c$.

As in the case of the scintillator experiments, it is difficult to compare the results of experiments which differ in so many ways. However, the combined result of the AI-ET experiments at $10^{-3}c$ is 1.0×10^{-13} cm^{-2} sr^{-1} s^{-1}, while the KGF result using conventional gas mixtures is nearly an order of magnitude lower. The La Jolla experiment is the first to probe the possibility that monopoles are bound to stellar systems ($v \approx 10^{-4}c$), and we look forward to large-aperture results in this region.

8. The MACRO detector

A large consortium of physicists† from CERN, Italy, and the United States has proposed a 12 000 m^2 sr *M*onopole, *A*strophysics, and *C*osmic *R*ay *O*bservatory (MACRO) to be located 4000 hg cm^{-2} underground, in Italy's Gran Sasso Tunnel [165]. Since it will consist of scintillator counters, streamer tubes, and track-etch detectors, description of this bold proposal does not conveniently fit into any of the preceding sections. Much of the prototype development has already been completed, approval for the dominant Italian parts of the venture have been obtained, and 1/9 of the detector should be installed and operating by late 1986.

Although the monopole search is the primary goal, MACRO will also search for point sources of high-energy neutrinos (by looking at secondary muon directions), for neutrinos from supernova core collapse (contained events in the detector), and will do standard cosmic ray muon physics at an interesting depth.

Most of the components are arranged in horizontal planes. Each module is 6.2 m × 12 m × 4.7 m high, with the long dimension of the module nearly filling the width of Hall B in the Gran Sasso Laboratory.

* Several numerical corrections to the paper have been made, and the quencher was really methane.

† B. Barish (Caltech) and E. Iarocci (Frascati) are the co-spokesmen for the collaboration.

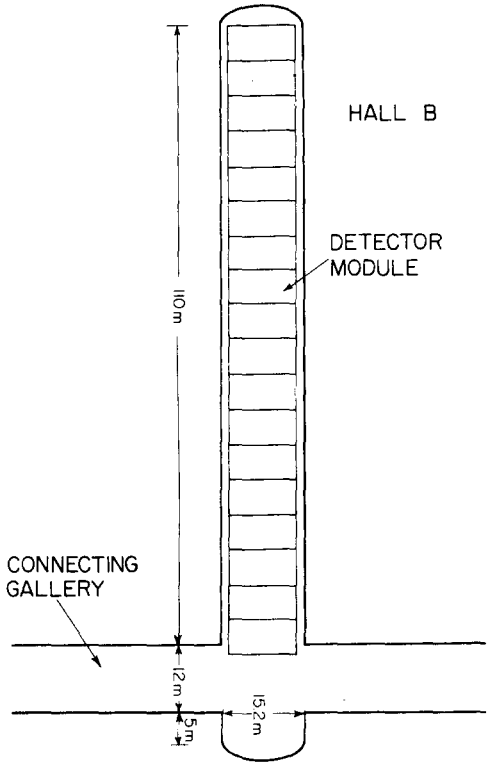

Fig. 20. Planned MACRO detector layout in Hall B of the Gran Sasso Laboratory. Each module is 6.2 m × 12 m, so that the entire 18-module array is 111.4 m × 12 m.

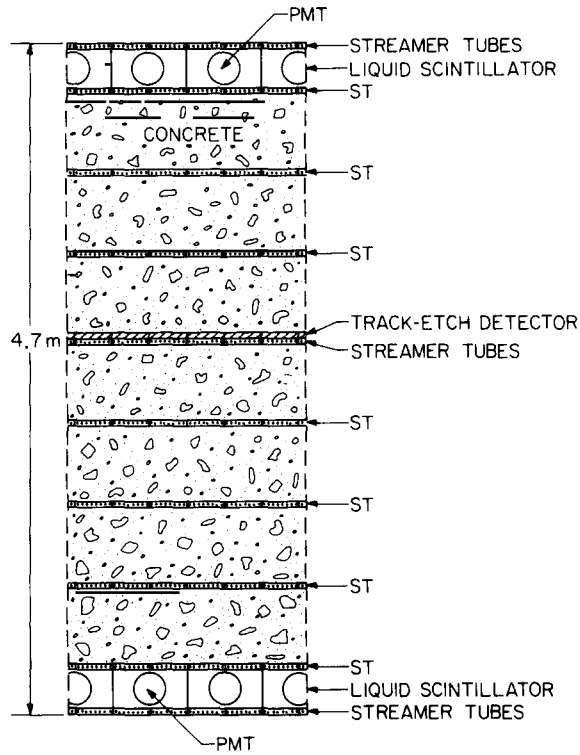

Fig. 21. Cross section of the MACRO detector, with the cut along the length of the detector hall. Vertical planes of streamer tubes (ST) and scintillation counters cover the ends of the modules.

Eighteen such modules more than fill the length of the hall, for a total length of 111.4 m. The arrangement is shown in fig. 20. Both ends of the "connecting gallery" shown in the figure meet the north side highway tunnel, providing truck access to the laboratory.

A section across one of the modules (parallel to the long axis of the hall) is shown in fig. 21. Large liquid scintillator counters span the length of each module (crosswise to the hall) at its top and bottom. Ten layers of streamer tubes, also oriented along the 12 m length of the modules, are arranged as shown. Near the midplane is a layer of plastic track-etch detectors. Half-meter thick concrete slabs separate the layers. The overall height was chosen to provide reliable time-of-flight determination of muon directions, which is essential for the neutrino-physics goals of the experiment. Not shown is a top concrete cover, which might serve as the floor for an experiment occupying the upper 10 m of the tunnel.

Also not shown are the module "ends". Two vertical planes of streamer tubes (with wires horizontal) are separated by a plane of scintillators, similar to the ones used at the top and bottom of the array. Given that module sides meet other modules, the detector is nearly hermitic. The ratio of active area to total area is about 0.96.

The 25 cm × 50 cm × 12 m scintillation counters are evolved from those developed for Homestake [151]. The mineral-oil based liquid scintillator fills PVC boxes with teflon liners (for total internal reflection). The 20 cm diameter hemispherical photomultipliers were chosen to optimize time resolution. A threshold at $0.1I_{min}$ will be used initially; gain calibrations will be made using the 30 muons which go through each box daily.

The He–n-pentane filled plastic streamer tubes are also based upon a well-tested design, this time in the NUSEX detector [158]. The 3 cm × 3 cm tubes are in a plastic extrusion, with conductor (graphite) only on the vertical walls of the extrusion. After some hours of operation, an equilibrium charge distribution is established on the dielectric horizontal planes, shaping the field. Readout is by means of conducting strips on the *outside* of the extrusion, parallel to the tube direction on one side and at 45° on the other. Since one electron–ion pair can initiate the breakdown, operation at $0.003I_{\min}$ is expected. It will also be possible to operate some of the planes in a proportional mode, should a reason develop to do so.

Two of the various triggers are relevant to the monopole search:

1. A slow coincidence between top and bottom scintillators initiates detector readout, including waveform digitization of the scintillator pulses. Among other things, a monopole candidate must show the proper relationship between pulse widths and the transit time between top and bottom layers. The electronic window is for $v > 10^{-4}c$, but as usual $\mathrm{d}E/\mathrm{d}x$ limits the lower velocity to $\sim 5 \times 10^{-4}c$.

2. An AI-ET trigger will be implemented using the streamer tubes. Because of their low threshold and the presence of natural radioactivity, some degree of pattern recognition must be implemented to obtain low trigger rates. Uncharged monopoles with $v > 10^{-4}c$ should produce this trigger.

The track-etch detector package near the mid-plane of array consists of two 1 mm sheets of CR-39 (with expected threshold $5 \times 10^{-3}c$) and four 0.2 mm sheets of Lexan (for $v > 0.3c$). The appropriate 50 cm × 50 cm modules will be etched if the electronics produces an interesting event.

The turn-on of the detector over the next several years will be a gradual process. The entire detector will be able to establish a monopole flux limit at $0.6 \times 10^{-15}\ \mathrm{cm}^{-2}\ \mathrm{sr}^{-1}\ \mathrm{s}^{-1}$ in one year, and operation for about a decade is anticipated. It thus offers the exciting prospect of searching well below the Parker limit for monopoles with $v > 10^{-4}c$.

9. Terrestrial limits based upon nucleon decay catalysis

There is yet another rock to look under. In section 2 we wrote the nucleon decay catalysis cross section as

$$(v/c)_{\Delta B \neq 0} = 10^{-28}\ \mathrm{cm}^2\ f_0\ ,$$

where the scale factor f_0 was perhaps as great as unity, but was very likely $O(10^{-4})$ or so. It was also possible that catalyzed decay proceeded only through the "weak anomaly", with $f_0 \approx 10^{-14}$. Neutron star luminosity limits were used to find $Ff_0 \lesssim 10^{-22}\ \mathrm{cm}^{-2}\ \mathrm{sr}^{-1}\ \mathrm{s}^{-1}$. If catalysis does proceed with a weak interaction cross section this limit is not very interesting, but another possibility exists. Under terrestrial conditions (but not in a neutron star) a monopole might bind to an odd-spin nucleus, and catalyzed decay would then occur on a weak-interaction timescale. Catalyzed decay might be observed in a terrestrial proton-decay detector, for example, without severe astrophysical consequences [166, 167].

For example, suppose the proton-monopole capture cross section were $10^{-25}\ \mathrm{cm}^2$ (equivalent to $f_0 = 1$ at $v = 10^{-3}c$, but for a different process). If the capture cross section on $^{16}\mathrm{O}$ were negligible, the monopole's interaction length in water would be 140 cm (18/2 times the 16 cm obtained in section 2). At $10^{-3}c$, an average of 5 ns would elapse between collisions – sufficient time for catalysis via a weak process. Since the monopole–proton binding energy is between 10 keV and 100 keV, such two-step processes would not occur in the hot interiors of neutron stars.

In the astrophysical context, we ignored the possibility that a nuclear angular momentum barrier might suppress or enhance the catalysis cross section. In the case of a terrestrial detector, where such effects are important, it is convenient to re-write the cross section as

$$(v/c)\sigma_{\Delta B\neq 0} = F(\beta, Z)\, f_0 \times 10^{-28}\ \mathrm{cm}^2 .$$

The suppression factor $F(\beta, Z)$ can differ from unity by several orders of magnitude in either direction [65]. The cross section is enhanced for odd-spin nuclei (protons, ^{27}Al, etc.), and suppressed for spin-0 nuclei like ^{16}O. At the risk of confusing direct catalysis with capture, we note that the same physics leads to the large ^{27}Al capture cross section relevant to the mica track-etch experiments.

Now suppose that a monopole crosses a large proton-decay apparatus, such as the water-filled IMB detector [169]. It captures a proton after traveling some characteristic interaction length λ_c (140 cm, if $F(\beta, Z)f_0$ is unity for protons and zero for oxygen), and a catalyzed decay quickly occurs. After another mean distance λ_c the process repeats, as the monopole leaves a trail of proton-decay stars through the detector. The electronic and analysis logic must obviously treat such an event differently than a "normal proton decay"(!), so that the event will not be lost because (a) the first or last decay occurs outside the fiducial volume, with decay products perhaps even going through a veto shield, or (b) the first decay initiates event readout, blocking observation of the rest of the event. The observation of this remarkable signature would simultaneously demonstrate the two crowning predictions of grand unified theories – the existence of monopoles and the occurrence of proton decay.

Seven such experiments have reported the absence of such signatures [168]:

1. *Irvine–Michigan–Brookhaven* (IMB) [169]. This 22.8 m × 16.8 m × 17.5 m water-filled Čerenkov detector is located in an Ohio salt mine.

2. *Aachen–Hawaii–Tokyo* (AHT) [170]. An event multiplicity of ≥4 was required in the 17 m^3 water detector, unlike the ≥2 requirement in all of the other detectors.

3. *NUSEX* [171]. This iron-plate–limited streamer tube detector was described earlier in connection with a direct monopole search [158].

4. *KAMIOKANDE* [70, 172]. A 3000 m^3 water Čerenkov detector is located 2700 hg cm^{-2} deep in the Kamioka mine, where the University of Tokyo scintillator array is located at a shallower depth [140]. Limits based upon the lack of neutrinos from monopole catalysis in the sun, also set with this detector, were discussed in section 2.

5. *SOUDAN-I* [155]. Described above in connection with direct monopole detection [155], this 103 m^2 sr PWC-in-concrete detector has also been used to set limits based upon the absence of multiple-interaction catalysis events.

6. *Kolar Gold Fields* (KGF) [174]. This proton decay detector, consisting of 34 horizontal layers of PWC's and iron plates, is 6 m × 4 m × 3.7 m high, was mentioned earlier as having established the best PWC limit near $v \approx 10^{-3}c$ [156].

7. *Dublin* [175]. While the primary purpose of all the above arrays is the direct detection of nucleon decay, this 0.90 m^3 water Čerenkov detector was built specifically to look for monopole-catalyzed decays.

Perhaps the best multiple-interaction flux limits have been set using the IMB detector. Results after 300 days (most of the currently available livetime) are shown in fig. 22. The contours of constant λ_c correspond to monopole-proton capture cross sections of 1.5 mb, 15 mb, 150 mb and 1500 mb. We have also added curves of constant f_0, to make contact with our previous discussion of direct catalysis (catalysis-in-flight, in this context). As the interaction length becomes large compared with detector dimensions, the probability of multiple interactions becomes small, leading to the larger flux limits for

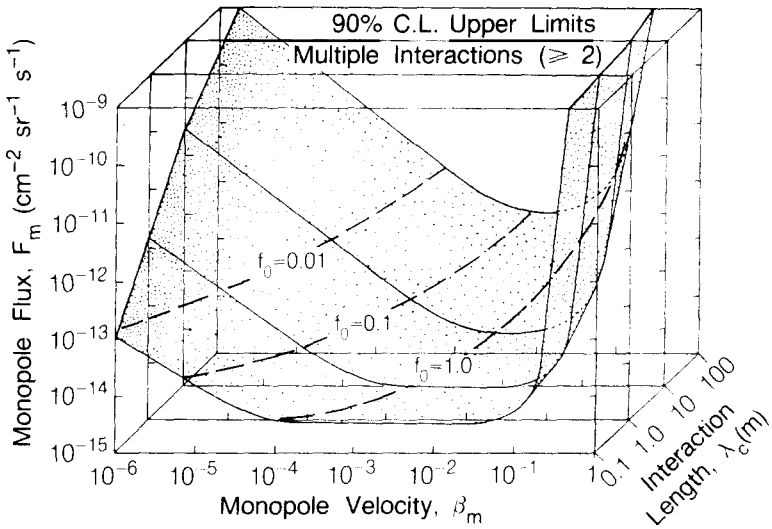

Fig. 22. The IMB flux limits as a function of monopole velocity and monopole interaction length in the water-filled detector.

larger λ_c. Similarly, very slow monopoles encounter electronic acceptance problems. For intermediate velocity and short interaction lengths detection efficiency is high, leading to the "bottoming out" of the flux limit at 3.4×10^{-15} cm^{-2} sr^{-1} s^{-1}.

Similar curves exist for all of the other detectors. KAMIOKANDE limits are nearly as low as those from IMB, while the other range upward.

10. Conclusions

Over the past three years, in a search of unprecedented scale and intensity, theoretical and experimental physicists from many specialties have quested for the legendary relic magnetic monopole, a particle required in the context of a very general class of grand unified theories. Occasional rumors to the contrary, there is at this point not one shred of evidence for its existence. The most dependable measurements, those obtained with magnetic induction experiments, now limit the flux to just over 10^{-12} cm^{-2} sr^{-1} s^{-1}, and we anticipate an order of magnitude improvement within the next two or three years. Direct searches with scintillator arrays have nearly reached 10^{-15} cm^{-2} sr^{-1} s^{-1} for monopoles with the local galactic virial velocity, a flux limit also set by rather solid astrophysical arguments. Somewhat more conjectural astrophysical arguments lead to limits 4 to 7 orders of magnitude lower. Price's searches in ancient mica also reach to 10^{-19} cm^{-2} sr^{-1} s^{-1} for $v = 10^{-3}c$, albeit with assumptions as to what was going on back at $kT = 50$ keV. Some of these arguments and searches are invalid if nucleon-decay catalysis exists, but in that case neutron stars would glow too brightly unless the flux were very, very small.

There are still possible habitats to be searched: If for some unknown reason the monopoles choose to orbit stars, there typical velocities at the earth are $\approx 10^{-4}c$, and here the first new-generation PWC experiments set preliminary limits near 5×10^{-13} cm^{-2} sr^{-1} s^{-1}, not far below the induction experiment bounds. We look forward to much better limits in this region, as well as to further improvements near $10^{-3}c$.

Even with negative results, the adventure has been well worth the trouble. Theoreticians and

experimentalists alike have reached new levels of understanding and technique, and new cross-disciplinary and international collaboration exists.

We must regretfully conclude that the massive magnetic monopole is not only endangered, but very likely extinct. We hope for nothing more than to be proven wrong by future experiments.

Acknowledgements

I have profited greatly from contact with one or more collaborators in most of the experiments and many of the theoretical discussions cited in this review. They have been generous with their time, contributed most of the figures, and have been very patient with someone who was often a stranger to their specialties. Much of the work was done while I was a guest at the Stanford Linear Accelerator Center, whose hospitality is appreciated. Finally, I wish to thank my father, Charles A. Groom, for introducing me to div $\boldsymbol{B}$ in ways he never knew.

References

[1] P.A.M. Dirac, Proc. Roy. Soc. London, Ser. A 133 (1931) 60. This beautiful paper is required reading for anyone interested in the subject.
[2] R.A. Carrigan Jr., Nature 288 (1980) 348.
[3] M.J. Longo, Phys. Rev. D25 (1982) 2399–2405.
[4] G. 't Hooft, Nucl. Phys. B79 (1974) 276.
[5] A. Polyakov, Pis'ma Zh. Eksp. Theor. Fiz. 20 (1974) 430 [JETP Lett. 20 (1974) 194].
[6] B. Cabrera, Phys. Rev. Lett. 48 (1982) 1378.
[7] J.A. Harvey, M.A. Ruderman and J. Shaham, Phys. Rev. D33 (1986) 2084.
[8] P.B. Price, Shi-lun Guo, S.P. Ahlen and R.L. Fleischer, Phys. Rev. Lett. 52 (1984) 1265.
[9] J. Preskill, Ann. Rev. Nucl. Part. Sci. 34 (1984) 461.
[10] Y. Rephaeli and M.S. Turner, Phys. Lett. 121B (1983) 115.
[11] Magnetic Monopoles, eds. R.A. Carrigan and W.P. Trower (Plenum Publishing Corp., New York, 1983).
[12] Monopole '83, ed. J.L. Stone (Plenum Publishing Corp., New York, 1984).
[13] Monopoles in Quantum Field Theory: Proc. Monopole Meeting in Trieste, Italy, Dec. 1981, eds. N.S. Craigie, P. Goddard and W. Nahm (World Scientific Publishing Co. Pte. Ltd., Singapore, 1982).
[14] G. Giacomelli, La Rivista del Nuovo Cimento 7, No. 12 (1984).
[15] R.A. Carrigan Jr. and W.P. Trower, Nature 305 (1983) 673.
[16] R.A. Carrigan Jr. and W.P. Trower, Sci. Am. 246, No. 4 (1982) 106.
[17] This argument is given by J.D. Jackson, Classical Electrodynamics (2nd ed., Wiley, 1975), who credits it to A.S. Goldhaber, Phys. Rev. 140B (1965) 1407.
[18] D. Sivers, Phys. Rev. D2 (1970) 2048;
L. Bracci and G. Fiorentini, Nucl. Phys. B232 (1984) 236.
[19] B. Julia and A. Zee, Phys. Rev. D11 (1975) 2227.
[20] C.R. Dokos and T.N. Tomaras, Phys. Rev. D21 (1980) 2940.
[21] V.A. Rubakov, Pis'ma Zh. Eksp. Teor. Fiz. 33 (1981) 658 [JETP Lett. 33 (1981) 644]; Nucl. Phys. B203 (1982) 311;
V.A. Rubakov and M.S. Serbryakov, Nucl. Phys. B218 (1983) 240.
[22] C.G. Callan, Princeton Univ. Preprints "Disappearing Dyons" and "Dyon-Fermion Dynamics" (1982); Phys. Rev. D25 (1982) 2141; D26 (1982) 2058.
[23] Ya.B. Zeldovich and M.Yu. Khlopov, Phys. Lett. 79B (1978) 239;
J.P. Preskill, Phys. Rev. Lett. 43 (1979) 1365.
[24] A.H. Guth, Phys. Rev. D23 (1981) 347–356.
[25] E.N. Parker, Astrophys. J. 122 (1955) 293; 160 (1970) 383; Cosmical Magnetic Fields (Clarendon, Oxford, 1979).
[26] S.A. Bludman and M.A. Ruderman, Phys. Rev. Lett. 36 (1976) 840;
G. Lazarides, Q. Shafi and T.F. Walsh, Phys. Lett. 100B (1981) 21.
[27] S. Dimopoulos, S.L. Glashow, E.M. Purcell and F. Wilczek, Nature 298 (1983) 824.

[28] K. Freese and M.S. Turner, Phys. Lett. 123B (1983) 293.
[29] R.A. Carrigan Jr., Nature 288 (1980) 348.
[30] M.S. Turner, Nature 302 (1983) 804.
[31] T. Ebisu and T. Watanabe, J. Phys. Soc. Japan 52 (1983) 2617; Monopole '83, ed. J.L. Stone (Plenum Publishing Corp., New York, 1984) p. 503; Kobe Univ. preprints KOBE-84-07 and KOBE-84-08 (1984).
[32] R. March, D. Cline and D. Joutras, Monopole '83, ed. J.L. Stone (Plenum Publishing Corp., New York, 1984) p. 511.
[33] M.S. Turner, E.N. Parker and T.J. Bogdan, Phys. Rev. D26 (1982) 1296.
[34] E.E. Salpeter, S.L. Shapiro and I. Wasserman, Phys. Rev. Lett. 49 (1982) 114.
[35] C. Heiles, Ann. Rev. Astron. Astrophys. 14 (1976) 1–22.
[36] J.R. Jokipii and E.N. Parker, Ap. J. 155 (1969) 799;
J.R. Jokipii, I. Lerche and R.A. Schommer, Ap. J. Lett. 157 (1969) L119.
[37] M.E. Wiedenbeck and D.E. Greiner, Ap. J. 239 (1980) L139.
[38] D.J. Cutler, H.E. Bergeson, J.F. Davis and D.E. Groom, Ap. J. 248 (1981) 1166 (and references therein).
[39] See the discussion and references [18–22] in ref. [10].
[40] J. Yang, M.S. Turner, G. Steigman, D.N. Schramm and K.A. Olive, Ap. J. 281 (1984) 493.
[41] J.R. Primack, Invited Talk at the Fourth Workshop on Grand Unification (April, 1983), UCSC-TH-162-83.
[42] M.S. Turner, FERMILAB-Conf-85/153-A (1985), to be published in Proc. Cargese School on Fundamental Phys. and Cosmology, eds. J. Audouze and J. Tran Thanh Van (Editions Frontieres, Gif-Sur-Yvette, 1985).
[43] E.N. Parker, Monopole '83, ed. J.L. Stone (Plenum Publishing Corp., New York, 1984) p. 125.
[44] J. Arons and R.D. Blanford, Phys. Rev. Lett. 50 (1983) 544.
[45] R. Farouki, S.L. Shapiro and I. Wasserman, Ap. J. 284 (1984) 282;
I. Wasserman, S.L. Shapiro and R. Farouki, Cornell Univ. preprint CRSR 810 (Jan. 1984); to be published in Comm. on Astrophys.
[46] D. Chernoff, S.L. Shapiro and I. Wasserman, Cornell Univ. preprint CRSR 835 (Aug. 1985), to be published.
[47] D.M. Ritson, New Limits on a Galactic Monopole Flux, SLAC-PUB-2977 (1982).
[48] A.K. Drukier, The Limits to the Cross-Section for Monopole Creation Obtained from the Persistence of the Magnetic Field of White Dwarfs, Acta Astronomica, to be published; Proc. Trieste Conf. on Magnetic Monopoles, Dec. 1981.
[49] M. Alpar, A. Cheng, M.A. Ruderman and S. Shaham, Nature 300 (1982) 728;
M.A. Ruderman and J. Shaham, Comm. Astrophys. 10 (1983) 15.
[50] J.A. Harvey, Monopole '83, ed. J.L. Stone (Plenum Publishing Corp., New York, 1984) p. 137.
[51] J. Frieman, K. Freese and M.S. Turner, Ap. J. (1986) to be published.
[52] J. Ellis, D.V. Nanopoulos and K.A. Olive, Phys. Lett. 116B (1982) 127.
[53] F.A. Bais, J. Ellis, D.V. Nanopoulos and K.A. Olive, Nucl. Phys. B219 (1983) 189.
[54] F. Wilczek, Phys. Rev. Lett. 48 (1982) 1146.
[55] See the "Note added" in ref. [54], and the discussion by J.D. Barrow and M.S. Turner, Nature 298 (1982) 801.
[56] T.F. Walsh, P. Weisz and T.T. Wu, Nucl. Phys. B232 (1984) 349.
[57] S. Dawson, Monopole '83, ed. J.L. Stone (Plenum Publishing Corp., New York, 1984) p. 229.
[58] A. Sen, Nucl. Phys. B250 (1985) 1.
[59] A.N. Schellekens, Phys. Rev. D29 (1984) 2378.
[60] E.W. Kolb, S.A. Colgate and J.A. Harvey, Phys. Rev. Lett. 49 (1982) 1373.
[61] S. Dimopoulos, J.R. Preskill and F. Wilczek, Phys. Lett. 119B (1982) 320.
[62] K. Freese, M.S. Turner and D.N. Schramm, Phys. Rev. Lett. 51 (1983) 1625.
[63] E.W. Kolb and M.S. Turner, Ap. J. 286 (1984) 702.
[64] M.S. Turner, FERMILAB-Conf-85/72-A (1985), to appear in Ann. N.Y. Acad. Sci. (1986).
[65] J. Arafune and M. Fukugita, Phys. Rev. Lett. 50 (1983) 1901.
[66] T.F. Walsh, Proc. 21st Int. Conf. on High Energy Phys., Paris, France (1982).
[67] This work is reported in ref. [62], but the details are given in ref. [51]. Also see J.A. Frieman, Proc. Santa Fe Meeting of A.P.S. Div. Part. Fields, Oct. 31–Nov. 3 (1984) p. 476.
[68] K. Freese, Ap. J. 286 (1984) 216.
[69] T.G. Cowling, M.N. 96 (1935) 42.
[70] T. Kajita et al., J. Phys. Soc. Japan 54 (1985) 4065.
[71] Here and elsewhere in this section, we have drawn heavily from the excellent review of inductive detectors by H.J. Frisch, Monopole '83, ed. J.L. Stone (Plenum Publishing Corp., New York, 1984) p. 515.
[72] J.R. Clem, Monopole '83, ed. J.L. Stone (Plenum Publishing Corp., New York, 1984) p. 481.
[73] B. Cabrera, Magnetic Monopoles, eds. R.A. Carrigan and W.P. Trower (Plenum Publishing Corp., New York, 1983) p. 175.
[74] C.D. Tesche, C.C. Chi, C.C. Tsuei and P. Chaudhari, Appl. Phys. Lett. 43 (1983) 384.
[75] C.C. Chi, C.D. Tesche, C.C. Tsuei, P. Chaudhari and S. Bermon, Monopole '83, ed. J.L. Stone (Plenum Publishing Corp., New York, 1984) p. 451.
[76] Andre-Marie Ampere, Theorie des Phenomenes Electro-dynamiques (Mequignon-Marvis, Paris, 1826) p. 14 and fig. 1.

[77] J.R. Incandela, M. Campbell, H. Frisch, S. Somalwar, M. Kuchnir and H.R. Gustafson, Monopole '83, ed. J.L. Stone (Plenum Publishing Corp., New York, 1984) p. 461.
[78] J.R. Incandela, M. Campbell, H. Frisch, S. Somalwar, M. Kuchnir and H.R. Gustafson, Phys. Rev. Lett. 53 (1984) 2067.
[79] S. Somalwar, H. Frisch, J. Incandela and M. Kuchnir, Nuc. Instr. Meth. 226 (1984) 341.
[80] B. Cabrera, M. Taber, R. Gardner and J. Bourg, Phys. Rev. Lett. 51 (1983) 1933.
[81] B. Cabrera, M. Taber, R. Gardner, M. Huber and J. Bourg, Monopole '83, ed. J.L. Stone (Plenum Publishing Corp., New York, 1984) p. 439.
[82] W.P. Trower, Monopole '83, ed. J.L. Stone (Plenum Publishing Corp., New York, 1984) p. 625.
[83] B. Cabrera, private communication (September 1985).
[84] S. Bermon, P. Chaudhari, C.C. Chi, C.D. Tesche and C.C. Tsuei, Phys. Rev. Lett. 55 (1985) 1850.
[85] S. Bermon, C.C. Chi, C.C. Tsuei, P. Chaudhari, M. Ketchen, C.D. Tesche and A. Prodell, Proc. Inner Space/Outer Space Workshop, eds. M.S. Turner, D. Lindley, K. Olive and D. Seckel (Univ. of Chicago Press, 1986, in press).
[86] S. Bermon, private communication (September, December 1985).
[87] J.C. Schouten, A.D. Caplin, C.N. Guy, M. Hardiman and J.G. Park, Monopole '83, ed. J.L. Stone (Plenum Publishing Corp., New York, 1984) p. 471.
[88] C.N. Guy, Monopole '83, ed. J.L. Stone (Plenum Publishing Corp., New York, 1984) p. 491.
[89] A.D. Caplin, C.N. Guy, M. Hardiman, J.G. Park and J.C. Schouten, Nature 317 (1985) 234.
[90] M. Chown, New Scientist 108, No. 1480 (1985) 11.
[91] H.H. Kolm, F. Villa and A. Odian, Phys. Rev. D4 (1971) 1285;
P.H. Eberhard, R.R. Ross, L.W. Alvarez and R.D. Watt, Phys. Rev. D4 (1971) 3260.
[92] L.L. Vant-Hull, Phys. Rev. 173 (1968) 1412.
[93] Y.H. Kao, W.J. Yeh and B.Y. Shi (to be published 1986).
[94] F.R. Fickett, M. Cromar and A.F. Clark, Monopole '83, ed. J.L. Stone (Plenum Publishing Corp., New York, 1984) p. 477.
[95] A.F. Clark, M. Cromar and F.R. Fickett, I.E.E.E. Trans. on Magnetics, MAG21#2 (March 1985) 418.
[96] B. Rossi, High-Energy Particles (Prentice-Hall, 1952).
[97] E. Fermi and E. Teller, Phys. Rev. 72 (1947) 399.
[98] J. Lindhard, Kgl. Danske Videnskab. Selskab. Mat. Fys. Medd. 28 (1954) no. 8;
J. Lindhard and M. Scharff, Phys. Rev. 124 (1961) 128;
J. Lindhard, M. Scharff, H.E. Schiøtt, V. Nielsen and P.V. Thompsen, Kgl. Danske Videnskab. Selskab. Mat. Fys. Medd. 33 (1963) nos. 10, 14; 34 (1965) no. 14; 36 (1968) no. 10.
[99] L.C. Northcliffe, Ann. Rev. Nucl. Sci. 13 (1963) 67.
[100] S.P. Ahlen and K. Kinoshita, Phys. Rev. D26 (1982) 2347.
[101] H.H. Anderson and J.F. Ziegler, The Stopping and Ranges of Ions in Matter (Pergamon, New York, 1977). For a particularly nice example of a direct total dE/dx measurement, see A. Van Wijngaarden and H.E. Duckworth, Can. J. Phys. 40 (1962) 1749.
[102] S.H. Overbury, P.F. Dittner, S. Datz and R.S. Thoe, Rad. Eff. 41 (1979) 219.
Also see J.D. Garcia, Phys. Rev. A1 (1970) 280 for a summary of experimental results of K-shell ionization by slow protons.
[103] S.P. Ahlen and G. Tarlé, Phys. Rev. D27 (1983) 688.
[104] Y. Kazama, C.N. Yang and A.S. Goldhaber, Phys. Rev. D 15 (1977) 2287.
[105] D.M. Ritson, SLAC-Pub-2950 (1982) (unpublished).
[106] D.E. Groom, E.C. Loh, H.N. Nelson and D.M. Ritson, Phys. Rev. Lett. 50 (1983) 573.
[107] S.P. Ahlen, T.M. Liss and G. Tarlé, Phys. Rev. Lett. 51 (1983) 940 (Comment);
D.E. Groom, E.C. Loh, H.R. Nelson and D.M. Ritson, Phys. Rev. Lett. 51 (1983) 941 (Reply).
[108] H.N. Nelson, private communication, June 1983.
[109] F. Biggs, L.B. Mendelsohn and J.B. Mann, Atomic Data and Nuclear Data Tables 16 (1975) 201.
[110] P. Eisenberger and W.C. Marra, Phys. Rev. Lett. 27 (1971) 1413;
R.S. Holt and M.J. Loupter, Molecular Phys. 40 (1980) 857.
[111] S.P. Ahlen, T.M. Liss, C. Lane and G. Liu, Phys. Rev. Lett. 55 (1985) 181.
[112] W. Brandt and J. Reinheimer, Can. J. Phys. 46 (1968) 607.
[113] C. Renner, N.W. Hill, G.L. Morgan, K. Rush and J.A. Harvey, Nuc. Instr. Meth. 162 (1979) 5007.
[114] S.D. Drell, N.M. Kroll, M.T. Mueller, S.J. Parke and M.A. Ruderman, Phys. Rev. Lett. 50 (1983) 644–648.
[115] W.V.R. Malkus, Phys. Rev. 83 (1951).
[116] N.M. Kroll, S.J. Parke, V. Ganapathi and S.D. Drell, Monopole '83, ed. J.L. Stone (Plenum Publishing Corp., New York, 1984) p, 295.
[117] N.M. Kroll and V. Ganapathi, Inst. Phys. Conf. Ser. No. 71, paper presented at RIS 1984, Knoxville, Tenn., 16–20 April 1984.
[118] C.f. for example T.E. Bortner and G.S. Hurst, Phys. Rev. 93 (1954);
W.P. Jesse, J. Chem. Phys. 41 (1964) 2020.
[119] F. Kajino and Y.K. Yuan, Nuc. Instr. Meth. 228 (1985) 278.
[120] L. Bracci and G. Fiorentini, Phys. Lett. 123B (1983) 468 (erratum).
[121] D.C. Cundy, private communication (September 1983).
[122] P.M. McIntyre, Proc. 1982 Summer Workshop on Proton Decay Experiments, ANL-HEP-PR-82-24 (1982) 352;

R.C. Webb, Monopole '83, ed. J.L. Stone (Plenum Publishing Corp., New York, 1984) p. 581;
M.J. Shepko and R.C. Webb, Texas A&M Preprint DOE-ER40039-10 (Undated)..
[123] R.L. Fleischer, P.B. Price and R.M. Walker, Nuclear Tracks in Solids (Univ. Calif. Press, Berkeley, 1975).
[124] B.G. Cartwright, E.K. Shirk and P.B. Price, Nuc. Instr. Meth. 153 (1978) 457.
[125] D.A. Young, Nature 182 (1958) 375;
E.C.H. Silk and R.S. Barnes, Phil. Mag. 4 (1959) 970.
[126] K. Kinoshita and P.B. Price, Phys. Rev. D24 (1981) 1707.
[127] S.W. Barwick, K. Kinoshita and P.B. Price, Phys. Rev. D28 (1983) 2338.
[128] T. Doke et al., Phys. Lett. 129B (1983) 370.
[129] K. Kawagoe et al., Contributed Paper 239, Proc. 1983 Int. Symp. on Lepton and Photon Interactions at High Energies, Cornell Univ. (1983) (title only).
[130] S. Orito, private communication (October 1985).
[131] P.B. Price, Phys. Lett. 140B (1984) 112.
[132] S.P. Ahlen, P.B. Price, S. Guo and R.L. Fleischer, Monopole '83, ed. J.L. Stone (Plenum Publishing Corp., New York, 1984) p. 383.
[133] P.B. Price and M.H. Salamon, Proc. 19th Int. Cosmic Ray Conf. (La Jolla) 8 (1985) 242; Phys. Rev. Lett. 56 (1986) 1226.
[134] E. Kolb and D. Seckel, Proc. Santa Fe Meeting of A.P.S. Div. Part. Fields, Oct. 31–Nov. 3 (1984) 474.
[135] P.B. Price and M.H. Salamon, Proc. 13th Inter. Conf. on Solid State Nuclear Track Detectors, Rome (1986) (to be published).
[136] R. Bonarelli, P. Capiluppi, I. D'Antone, G. Giacomelli, G. Mandrioli, C. Merli and A.M. Rossi, Phys. Lett. 112B (1982) 100.
[137] R. Bonarelli, P. Capiluppi, I. D'Antone, G. Giacomelli, G. Mandrioli, C. Merli and A.M. Rossi, Phys. Lett. 126B (1983) 137.
[138] T. Mashimo, K. Kawagoe and M. Koshiba, J. Phys. Soc. Japan 51 (1982) 3065.
[139] T. Mashimo, S. Orito, K. Kawagoe, S. Nakamura and M. Nozaki, Phys. Lett. 128B (1983) 327.
[140] K. Kawagoe, T. Mashimo, S. Nakamura, M. Nozaki and S. Orito, Lett. Nuovo Cimento 41 (1984) 315.
[141] S. Orito, private communication (September 1983).
[142] E.N. Alexeyev, M.M. Boliev, A.E. Chudakov, B.A. Makoev, S.P. Mikheyev and Yu.Y. Sten'kin, Lett. Nuovo Cimento 35 (1982) 413.
[143] E.N. Alexeyev, M.M. Boliev, A.E. Chudakov and S.P. Mikheyev, Proc. 19th Int. Cosmic Ray Conf. (La Jolla) 8 (1985) 250.
[144] E.N. Alekseyev et al., Proc. 16th Int. Cosmic Ray Conf. (Kyoto) 10 (1985) 276.
[145] Private communications with A.E. Chudakov (February 1983, September 1984).
[146] G. Tarlé, S.P. Ahlen and T.M. Liss, Phys. Rev. Lett. 52 (1984) 90.
[147] J.K. Sokolowski and L.R. Sulak, Proc. 21st Conf. on High Energy Phys., Paris, eds. P. Petiau and M. Porneuf (Les Éditions Physique, 1982) (title only);
S. Seidel, J.K. Sokolowski and L.R. Sulak, unpublished Univ. of Michigan report (1983).
[148] F. Kajino, S. Matsuno, T. Kitamura, T. Aoki, Y.K. Yuan, M. Mitsui, Y. Ohashi and A. Okada, J. Phys. G. 10 (1984) 447.
[149] L.A. Ahrens et al., Phys. Rev. Lett. 51 (1983) 1514.
[150] P.L. Connolly, Monopole '83, ed. J.L. Stone (Plenum Publishing Corp., New York, 1984) p. 617;
D.H. White, private communication (October 1985).
[151] R.I. Steinberg, K. Brown, M.L. Cherry, S. Corbato, I. Davidson, D. Keida, K. Lande and C.K. Lee, Monopole '83, ed. J.L. Stone (Plenum Publishing Corp., New York, 1984) p. 567;
M.L. Cherry, S. Corbato, T. Daily, E.J. Fenyves, D. Kieda, K. Lande and C.K. Lee, Proc. 19th Int. Cosmic Ray Conf. (La Jolla) 8 (1985) 246.
[152] P. Galeotti, G. Badino, C. Castagnoli, W. Fulgione and O. Saavedra, Monopole '83, ed. J.L. Stone (Plenum Publishing Corp., New York, 1984) p. 561.
[153] J.D. Ullman, Phys. Rev. Lett. 47 (1981) 289–292.
[154] J. Bartelt et al., Phys. Rev. Lett. 50 (1983) 655.
[155] J.E. Bartelt, Monopole '83, ed. J.L. Stone (Plenum Publishing Corp., New York, 1984) p. 597;
J. Bartelt et al., Univ. Minnesota Report DOE/ER/4105-542 (September 1985) (submitted to Phys. Rev. D).
[156] M.R. Krishnaswamy, M.G.K. Menon, N.K. Mondal, V.S. Narasimham, B.V. Sreekantan, Y. Hayashi, N. Ito, S. Kawakami and S. Miyake, Proc. 19th Int. Cosmic Ray Conf. (La Jolla) 8 (1985) 234.
[157] C. Cho, S. Higashi, N. Hiraoka, A. Maruyama, S. Ozaki, T. Sato, T. Suwada, T. Takahashi and H. Umeda, Proc. 19th Int. Cosmic Ray Conf. (La Jolla) 8 (1985) 214;
S. Ozaki, private communications.
[158] M.J. Price, Monopole '83, ed. J.L. Stone (Plenum Publishing Corp., New York, 1984) p. 605;
D.C. Cundy, Proc. Inner Space/Outer Space Workshop, eds. M.S. Turner, D. Lindley, K. Olive and D. Seckel (Univ. of Chicago Press, 1986, in press).
[159] F. Kajino, S. Matsuno, Y.K. Yuan and T. Kitamura, Monopole '83, ed. J.L. Stone (Plenum Publishing Corp., New York, 1984) p. 589;
F. Kajino, S. Matsuno, Y.K. Yuan and T. Kitamura, Phys. Rev. Lett. 52 (1984) 1373.
[160] F. Kajino and T. Kitamura, private communications (1984).
[161] G.E. Masek, L.M. Knapp, E. Miller, J.P. Stronski, W. Vernon and J.T. White, Proc. 19th Int. Cosmic Ray Conf. (La Jolla) 8 (1985) 253;
G.E. Masek, private communication (October 1985).
[162] T. Hara et al., Proc. 19th Int. Cosmic Ray Conf. (La Jolla) 8 (1985) 218; Phys. Rev. Lett. 56 (1986) 553.

[163] P. Eschstruth, Monopole '83, ed. J.L. Stone (Plenum Publishing Corp., New York, 1984) p. 611.
[164] V.D. Ashitkov, T.M. Kirina, A.P. Kokoulin and A.A. Klimakov, Proc. 19th Int. Cosmic Ray Conf. (La Jolla) 8 (1985) 222.
[165] The MACRO Collaboration, "Proposal for a Large Area Detector Dedicated to Monopole Search, Astrophysics, and Cosmic Ray Physics". Servizio Documentazione dei Laboratori Nazionali di Frascati (November 1984);
The MACRO Collaboration (presented by J. Stone), Proc. 19th Int. Cosmic Ray Conf. (La Jolla) 8 (1985) 226;
The MACRO Collaboration (presented by G. Tarlé), Proc. 19th Int. Cosmic Ray Conf. (La Jolla) 8 (1985) 226.
[166] A.S. Goldhaber, Magnetic Monopoles, eds. R.A. Carrigan and W.P. Trower (Plenum Publishing Corp., New York, 1983) p. 1;
S. Errede, private communication (October 1985).
[167] G. Fiorentini, Monopole '83, ed. J.L. Stone (Plenum Publishing Corp., New York, 1984) p. 317.
[168] Detailed curves for six experiments (Dublin is more recent) are given in S. Errede, Proc. ICOBAN '84 Conf., Park City UT, January 1984 (Univ. of Michigan Preprint UM/PDK 84-74, July 1984).
[169] S. Errede et al., Phys. Rev. Lett. 51 (1983) 245; Monopole '83, ed. J.L. Stone (Plenum Publishing Corp., New York, 1984) p. 251. (An excellent review of decay catalysis observation attempts in proton decay detectors.)
[170] P.C. Bosetti et al., Phys. Lett. 133B (1983) 265.
[171] G. Battistoni et al., Phys. Lett. 133B (1983) 454.
[172] K. Takahashi, private communication (September 1983);
M. Koshiba, Proc. ICOBAN '84 Conf., Park City UT (January 1984).
[173] J.E. Bartelt, Monopole '83, ed. J.L. Stone (Plenum Publishing Corp., New York, 1984) p. 597.
[174] V.S. Narasimham, Proc. ICOBAN '84 Conf., Park City UT (January 1984).
[175] G. MacNeill and D.J. Fegan, Proc. 19th Int. Cosmic Ray Conf. (La Jolla) 8 (1985) 238.