受入
84-1-123
高工研図書室

EUROPEAN ORGANIZATION FOR NUCLEAR RESEARCH

CERN/EP 83-194
16 December 1983

SEARCH FOR DIRAC MONOPOLES IN pN COLLISIONS AT 400 GeV/c

J.M. Barkov[3], A.P. Bugorsky[4], G. Giacomelli[5], I.I. Gurevich[2], S.Kh. Khakimov[2], P. Lazeyras[1], V.P. Martemianov[2], A.P. Mishakova[2], V.V. Ogurtzov[2], V.G. Tarasenkov[2], V.N. Vyrodov[2], M.A. Kotov[2], L.A. Makarina[2] and A.A. Filippov[2]

1 CERN, Geneva.
2 Kurchatov Institute of Atomic Energy, Moscow.
3 Institute of Nuclear Physics, Novosibirsk.
4 Institute of High Energy Physics, Serpukhov.
5 Istituto di Fisica dell'Università and INFN, Bologna.

ABSTRACT

In a search for magnetic monopoles a series of ferromagnetic colletors of W-Fe powder was exposed to the 400 GeV/c proton beam in a beam dump at the CERN SPS. For pole masses smaller than 13.5 GeV the search yielded an upper limit cross section of (1-3) $\times 10^{-43}$ cm^2 (95% confidence level).

CERN/EP/1434P/GG/ef

Experimental searches for free magnetic monopoles have been performed at nearly every new high energy accelerator [1-3]. At present the main interest has shifted to monopoles with extremely high masses, predicted by the Grand Unified Theories (GUT) of strong, electromagnetic and weak interactions. However, one should keep an open mind to other possibilities.

The searches for free poles, which could be produced at high energy accelerators, are based on the hypothesis that they have a relatively large magnetic charge g as predicted by the Dirac relation

$$g = n\, g_o = \frac{1}{2}\frac{\hbar c}{e}\, n \sim \frac{137}{2}\, e\, n\ , \qquad (1)$$

where e is the elementary electric charge (which we shall assume to be the electron charge) and n is an integer. Magnetic monopoles should thus ionize heavily (if they are relativistic), should be accelerated to high energies even in modest magnetic fields over short lengths and should be trapped in matter.

This note describes the result of a search performed at the CERN SPS, using a ferromagnetic target of W-Fe powder exposed to the 400 GeV/c proton beam. Monopoles should have been produced in 400 GeV pN collisions; they should have been brought to rest in the target, where they should have been trapped in one of the powder elements. Later on, the pieces of the target were placed in a strong pulsed magnetic field; monopoles should have been extracted, accelerated and detected in nuclear emulsions and nitrocellulose sheets. Similar experiments were performed at various high energy accelerators [4-6].

The monopole target was made of a tungsten-iron (5%) powder compound with 2-3 μm grain size. The material has a density of ~ 12 g/cm^3; the energy loss of fast monopoles (with e = 1, n = 1) in this material should be approximately 75 GeV/cm. The highly developed ferromagnetic surface in such a target would exclude almost completely the possibility of bulk diffusion of monopoles and antimonopoles, thus preventing their annihilation. The W-Fe target was 3 cm in diameter, 31 cm long; it was made of 11 pieces of which the first five were 1.75 cm long and the last six pieces were 3.5 cm long. They were placed in a metal box (fig. 1) and

were cooled by running water at 4 atm pressure, with a flow of 2 ℓ per minute.

The monopole target was placed in front of the SPS narrowband neutrino beam dump. Two separate runs were performed with a total exposure of 3×10^{17} protons of 400 GeV incident on the target. The proton flux was determined by radiochemical methods via thin aluminium foils placed in front of the targets.

Since the monopole targets were placed after the (anti)neutrino target (for both narrowband and wideband beams) it is estimated that they received approximately 10^{18} pions of ~ 100 GeV average energy.

After exposure the monopole targets were brought to the Kurchatov Institute in Moscow, where monopole extraction was attempted with a strong pulsed magnetic field, using the layout illustrated in fig. 2. The detector consisted, on each side, of two nuclear emulsions Br2 of 400 μ thickness, of 2 nitrocellulose sheets of 50 μ thickness and of an emulsion chamber (fig. 2). Monopoles of both signs would be detected.

Each of the pieces of the monopole target was placed in succession at the centre of the magnet.

The pulsed magnetic, field with B_{max} = 300 kG, lasted 7 ms FWHM. The extraction energy of monopoles from the ferromagnetic powder compound corresponds to 50 kG. Monopoles would be extracted at the time the field reached 50 kG and would be accelerated at the same field (the rise time of the field is slow compared to the transit time of the poles). In the three centimeters between the end of the target piece and the front-end of the nuclear emulsion the poles would gain 3 GeV. Poles with this energy would traverse the 2 nuclear emulsion, the 2 nitrocellulose sheets and the emulsion chambers, where they would lose energy at the rate of ~ 100 KeV/μm (if e = n = 1). Afterwards, they would have the same energy loss rate they would gain from the magnetic field (~ 1 GeV/cm).

The nuclear emulsions which were placed on the monopole path on each side of the magnet were scanned with standard optical microscopes with

$15X_{oc}$ and $10X_{ob}$. Similarly, the first nitrocellulose sheet on each side was developed and scanned for holes. The system and the method of detection should have a global efficiency of essentially 100%.

No magnetic monopole was found. One can thus place only an upper limit on the monopole production cross section in reactions of the type

$$p + N \rightarrow p + N + G + \bar{G} + X \qquad (2)$$

at the level of (95% confidence level)

$\sigma < 3 \times 10^{-43}$ cm^2 in 400 GeV pN collisions,

$\sigma < 10^{-43}$ cm^2 in 100 GeV πN collisions.

The experiment was sensitive to monopoles of different magnetic charges, from a value of ~ 0.1 to ~ 20 Dirac charges.

Fig. 3 illustrates schematically, as a function of the monopole mass, the cross section limits obtained by various experiments.

Acknowledgements

We would like to thank the SPS staff and the neutrino beam support group for the exposures and for the radiochemical measurements.

REFERENCES

[1] For a general review of monopole searches see the proceedings of the Monopole Workshop held at Racine, Wisconsin (USA) in October 1982, R.A. Carrigan Jr. and W.P. Trower, editors, Plenum Press (1982).

[2] K. Kinoshita et al., Phys. Rev. Lett. 48 (1982) 77;

P. Musset et al., DESY 83-053 (1983).

[3] P. Musset et al., Search for magnetic monopoles in $p\bar{p}$ interactions at 540 c.m. energy.

[4] I.I. Gurevich et al., Phys. Lett. 38B (1972) 54 and Sov. Phys. JETP 34 (1972) 917.

[5] R.A. Carrigan et al., Phys. Rev. D8 (1973) 3717 and Phys. Rev. D10 (1974) 3867;

R.A. Carrigan et al., Phys. Rev. D17 (1978) 1754.

[6] Ph. Eberhard et al., Phys. Rev. D11 (1975) 3099.

FIGURE CAPTIONS

Fig. 1 Layout of the monopole target and of the water cooling system.

Fig. 2 Sketch of the monopole detector system.

Fig. 3 Compilation of upper limits for Dirac magnetic monopole production in pN, $\bar{p}p$, πN and e^+e^- collisions. Solid and dashed lines refer to direct and indirect experiments.

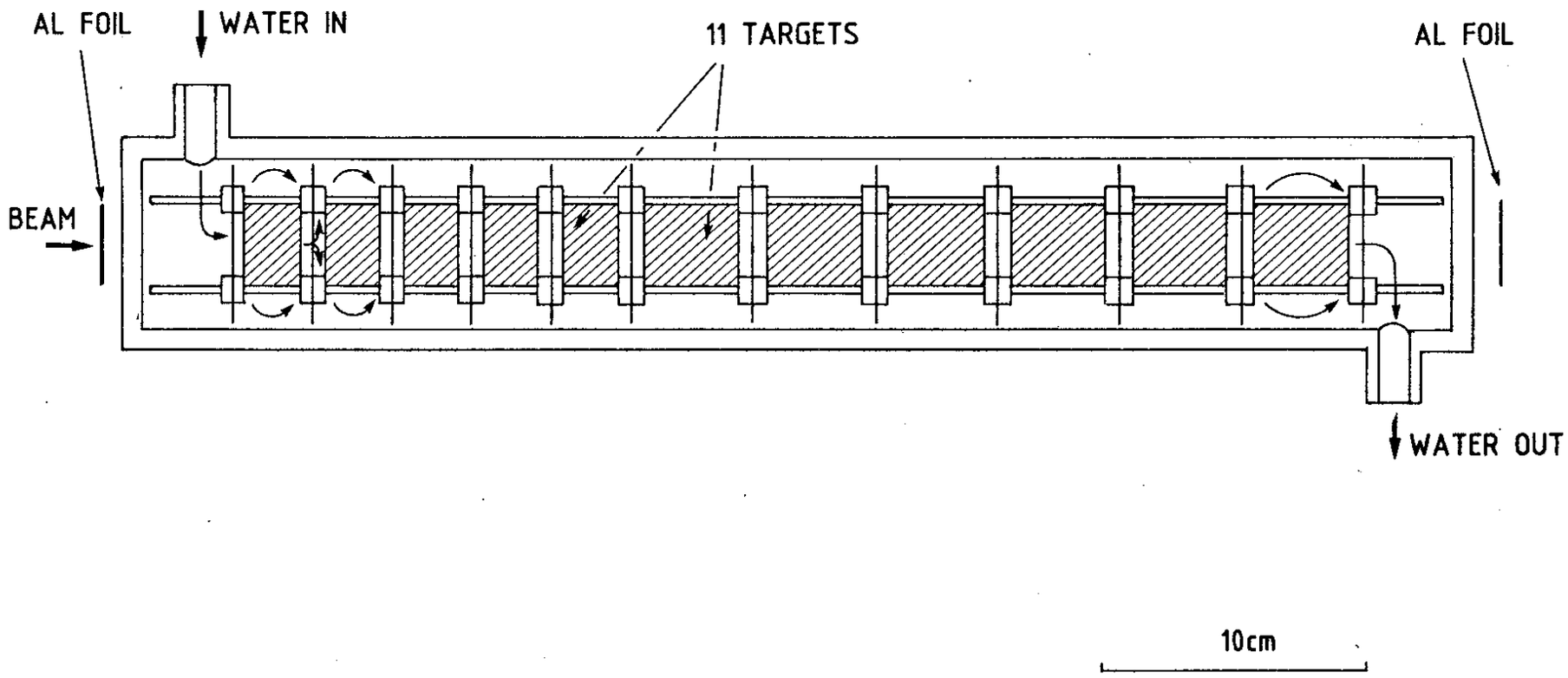

Fig. 1

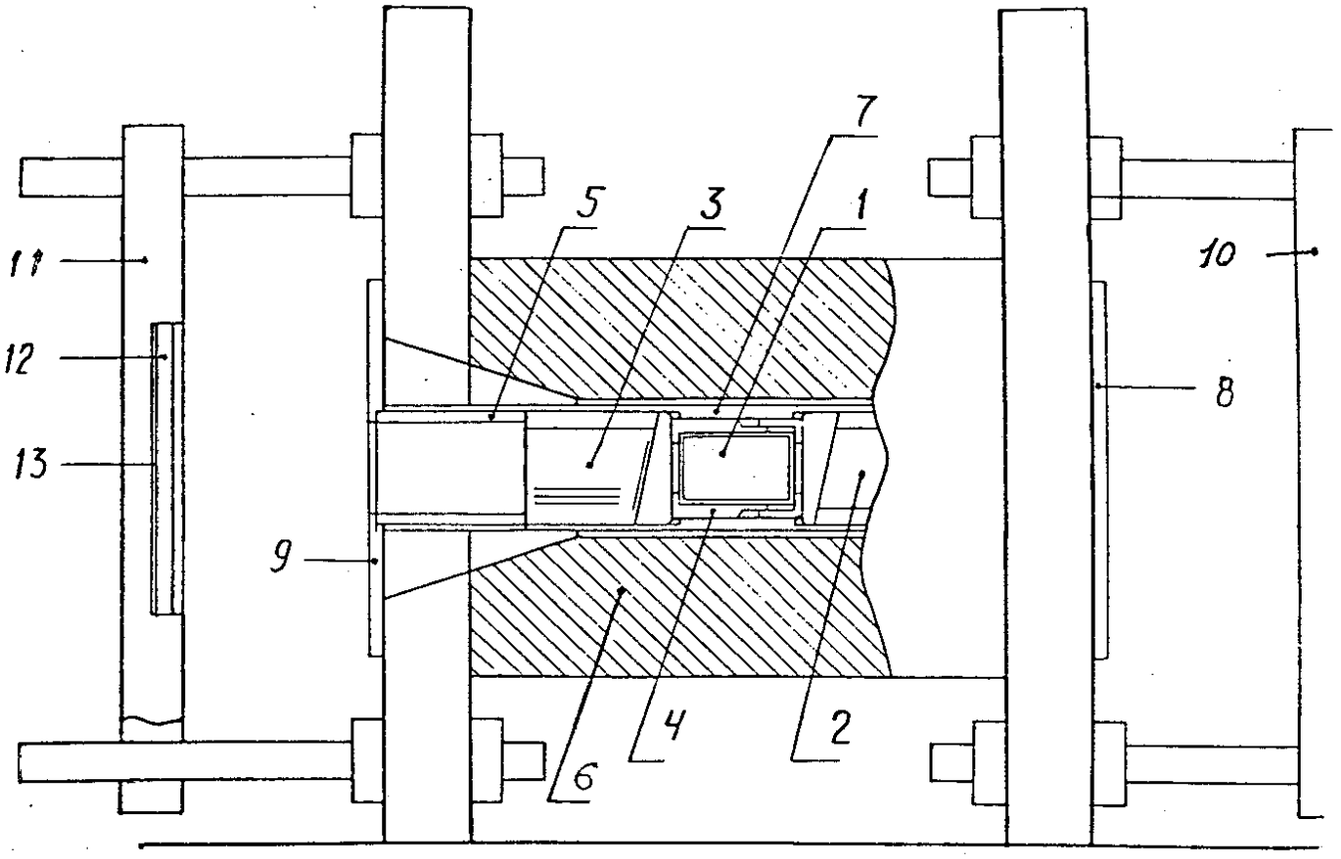

Fig. 2

1	Monopole target
2-3	Emulsion chambers
4	Plastic container
5	Support
6	Pulsed magnet coil
7	Plastic tube
8-9	Plastic supports
10-11	Supports
12	Lead plates
13	Ferromagnetic monopole trap

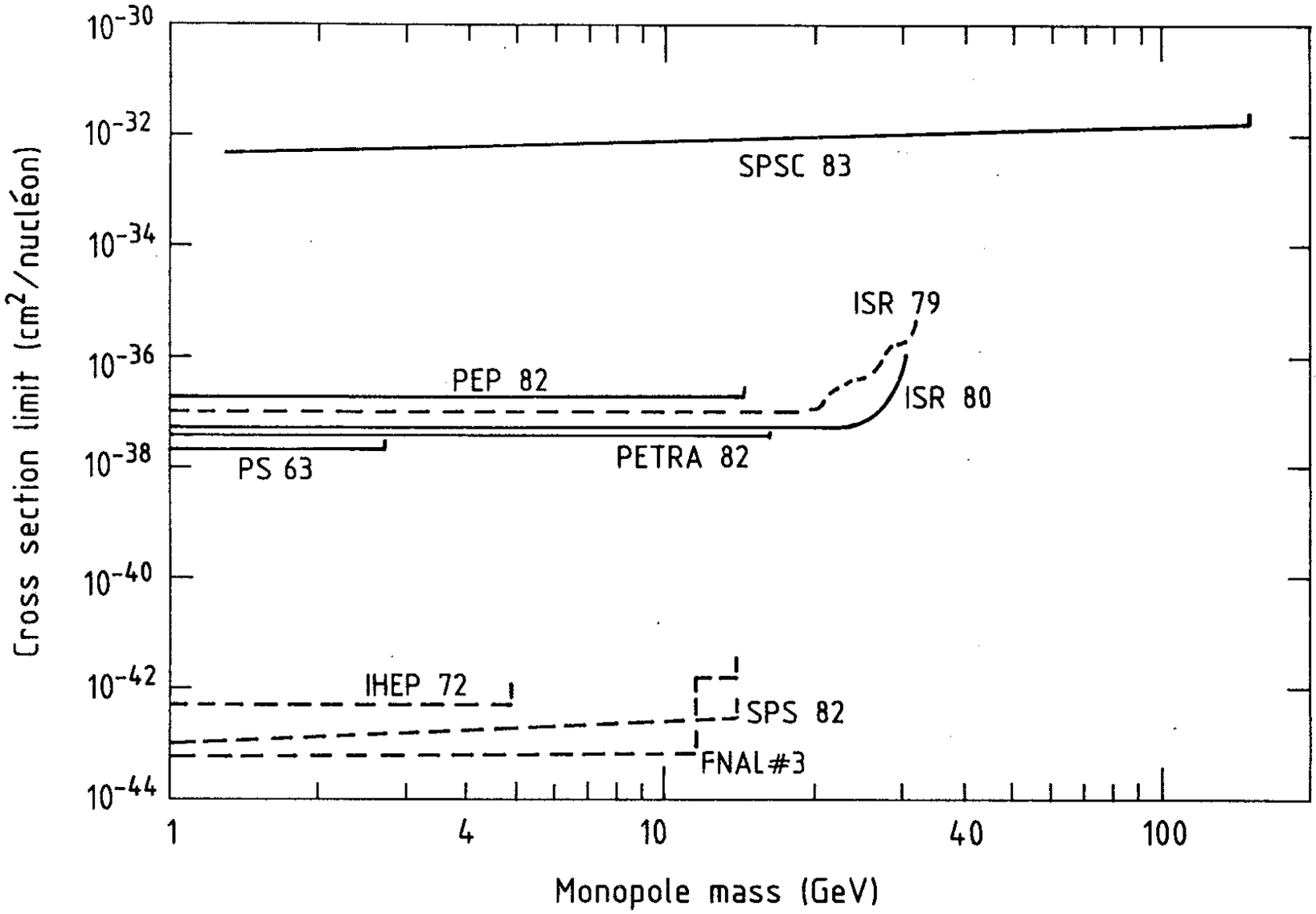
Cross section limit (cm²/nucléon)
10⁻³⁰
10⁻³²
10⁻³⁴
10⁻³⁶
10⁻³⁸
10⁻⁴⁰
10⁻⁴²
10⁻⁴⁴
SPSC 83
ISR 79
PEP 82
ISR 80
PETRA 82
PS 63
IHEP 72
SPS 82
FNAL#3
1
4
10
40
100
Monopole mass (GeV)

Fig. 3