Accelerator Based Magnetic Monopole Search Experiments (Overview)

Vasily Dzhordzhadze

Monopole Group Meeting

BNL, January 26, 2007

Outline

- MM characteristics
- Experimental techniques
- Indirect search
- Direct search
- Future experiments
- Summary

Why Magnetic Monopoles?

- **Reason 1 - aesthetic**
- **If MM exists Maxwell equation becomes symmetric**

$$\nabla \cdot \vec{E} = \frac{\rho}{\varepsilon_0}$$

$$\nabla \cdot \vec{B} = \mu_0 \rho_m$$

$$\nabla \times \vec{E} = -\frac{\partial \vec{B}}{\partial t} - \mu_0 j_m$$

$$\nabla \times \vec{B} = \mu_0 \vec{j} + \varepsilon_0 \mu_0 \frac{\partial \vec{E}}{\partial t}$$

$$F = e\left(\vec{E} + v \times \vec{B}\right) + g\left(\vec{B} - \frac{1}{c^2}(v \times E)\right)$$

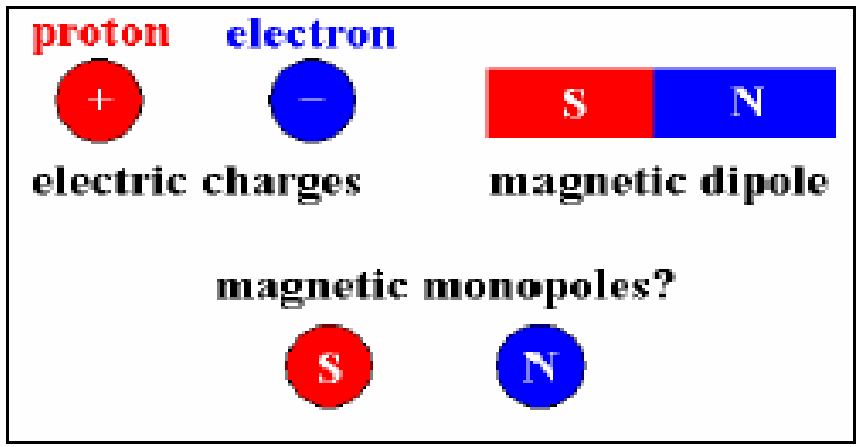

Why Magnetic Monopoles?

- Reason 2: P. Dirac, 1931 [Proc. R. Soc. 133(1931)60]
- If magnetic charge exists, the electron charge is automatically quantized: $eg = n\hbar c/2$
- $g = n\hbar c/2e = ne/2\alpha = (137/2)\,ne = 68.5en = g_D n$, $g_D = 68.5$, $|n|=1, 2, 3, \ldots$
- Coupling Constant: $g^2/\hbar c = e^2/\hbar c\,[g/e]^2 = 1/137\,[137/2]^2 = 34.25 \gg 1$, no perturbative methods
- Validity of virtual processes ($g-2$, $Z^0 \to \gamma\gamma\gamma$, higt P_t $\gamma\gamma$s) calculations are questionable

Why Magnetic Monopoles?

- **Monopole Trajectory in a Magnetic Field: $Z = a_o + a_1 s + a_2 s^2$ -> hyperbola**
- **Energy gained in a B field : W = ngBl, can reach several GeV/kGauss m;**
- **Energy loss of fast MMs with magnetic charge g_D and velocity β behaves like an equivalent electric charge $(ze)_{eq} = g_D\beta$.**
- **MM mass: Not known**
- **$r_e = e^2/m_e c^2 = r_M = g^2/m_M c^2$ $m_M = 2.4$ Gev/c^2**

Why Magnetic Monopoles?

- Reason 3: 't Hooft and Polyakov, 1974
- They introduced MM in GUT: The Higgs field in non Abelian gauge theory would produce MM when theory brakes from SU(5) into U(1). The mass of MM is related to the relevant gauge symmetry breaking scale: $m_{MM} = 10^{16} - 10^{17}$ GeV.
  [Nucl.Phys.Rev.29B(1974)276 and JETP Lett.20(1974)194]
- Other GUT scenarios predict MM mass: $m_{MM} = 10^{4}$ and lower ...

Magnetic Monopole Mass

- Classic Dirac Monopole: Any
- GUT Monopole: $10^{16} \rightarrow 10^{17}$ GeV
- Electro-weak Monopole (Cho Maison Monopole) $M_m^{EW} << M_m^{GUT}$; (Troost-Vincerelli Monopole) – depends on the nature of the matter field:
  $M_m^{TV} \sim 10^4$ GeV (IVB matter fields)
  $M_m^{TV} \sim 10^2$ GeV (ρ matter fields)
  $M_m^{TV} \sim$ 50 GeV (spin-1/2 matter fields)
- Superstring Monopoles (Banks, Dine, Djikstra & Fischler) $M_m^{SST} \sim 1$ TeV (?)

Monopole Detectors: Inductive

- Superconducting Induction devices – Long range EM interactions between the magnetic charge and the macroscopic quantum state of a SC ring. SC induction detector, consisting of a detection coil coupled to the SQUID
- Moving MM in a coil induces a current in a coil with inductivity L and N turns: $\Delta i=4\pi Ng/L=2\Delta i_o$
- SQUID-s are sensitive to Magnetic Monopoles of any velocity

Monopole Detectors Ionization

- **Many MM searches have been done using excitation loss technique. Light yield from MM traversing a scintillator has a threshold at $\beta \sim 10^{-4}$ above which light signal > MIP signal. For $10^{-3} < \beta > 10^{-1}$ there is a saturation effect. For $\beta > 10^{-1}$ light yield increases because of many δ-rays**

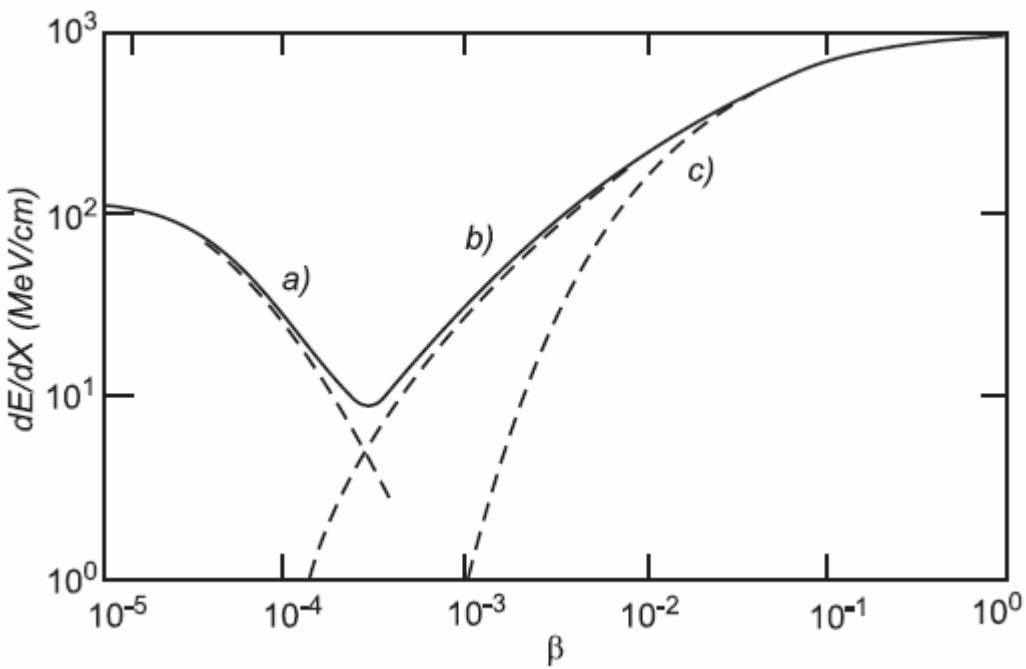

Energy loss of MM with $g=g_D$ in liquid Hydrogen vs its β: a-atomic scattering, b-level crossings, c-ionization energy loss

Monopole Detectors (continued)

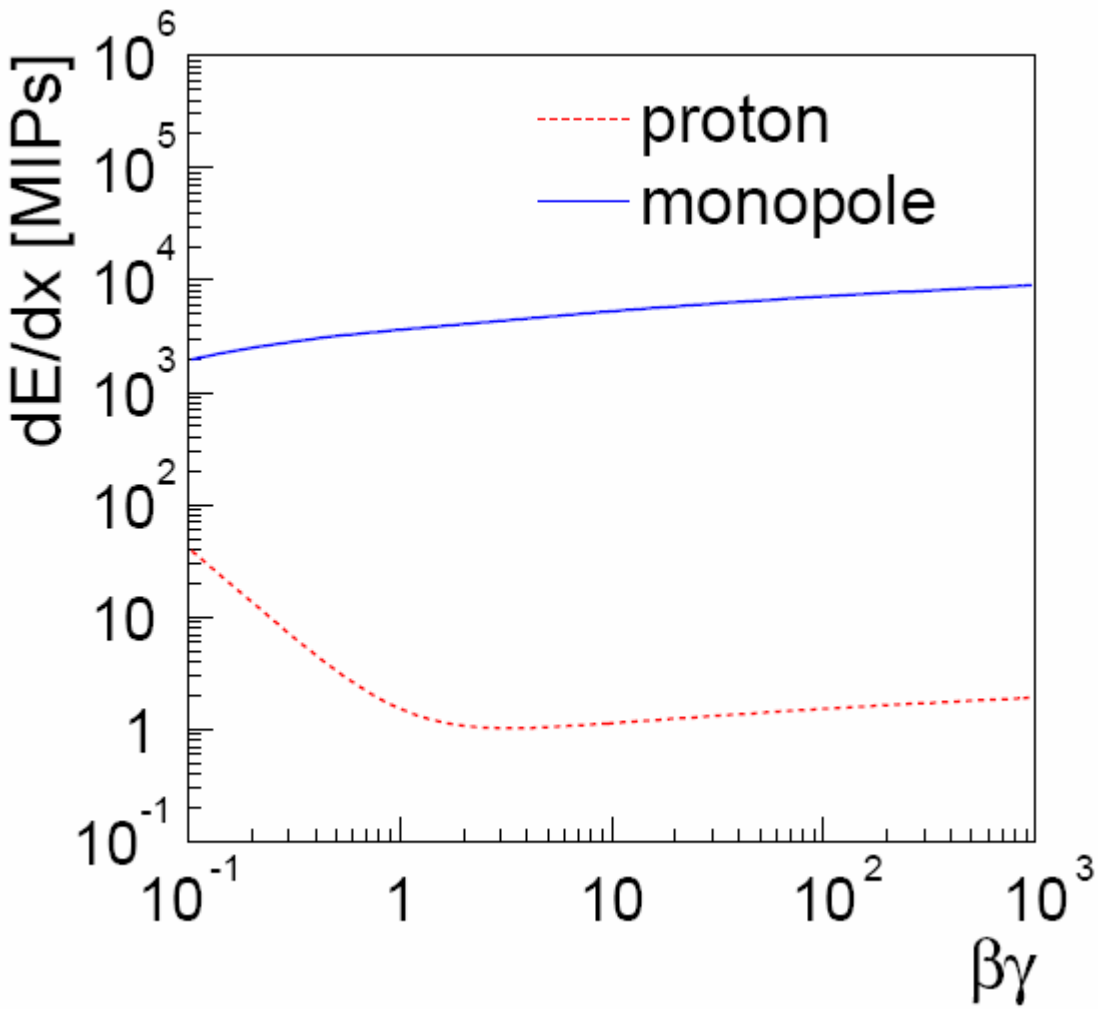

Energy loss of protons and Monopoles in air

Monopole Detectors, (continued)

- Nuclear track detectors (NTD) – can record the passage of heavily ionizing particle like MM.
- The formation of the etchable track in NTD is related to the Restricted Energy Loss
- REL is localized in a cylindrical area of ~10 nm diameter around the particle trajectory.
- NTD Materials: CR39, Lexan, Makrofol, Kapton, Nitrocelulose. Thresholds: CR39: $z/\beta \sim 5$, $g=1$, $\beta \sim 10^{-4}$ and $\beta > 10^{-3}$, $g=2$ $4\times10^{-5} < \beta < 1$. Lexan, Makrofol: $z/\beta \sim 50$.

Monopole Detectors: NTD (continued)

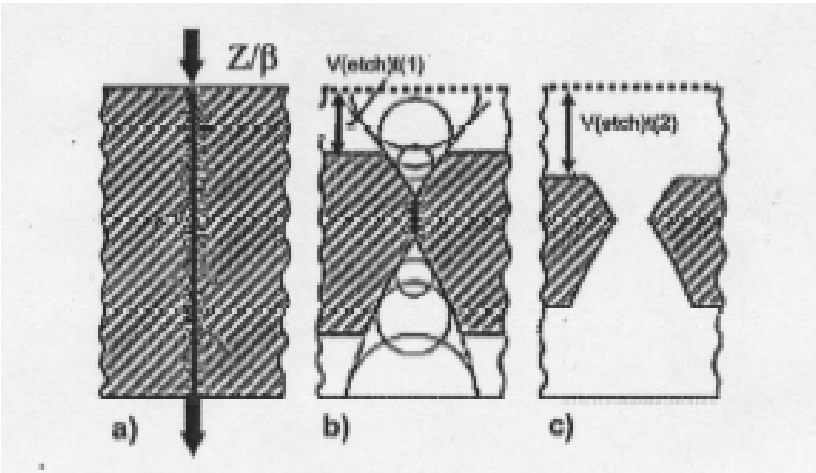

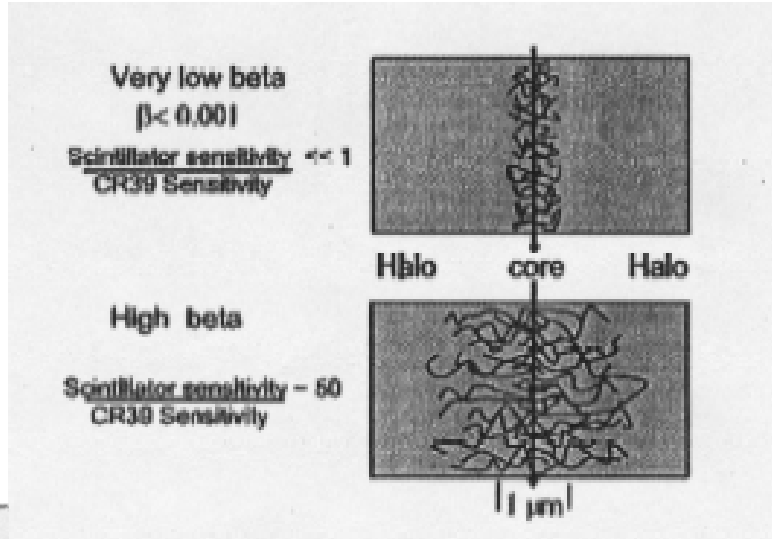

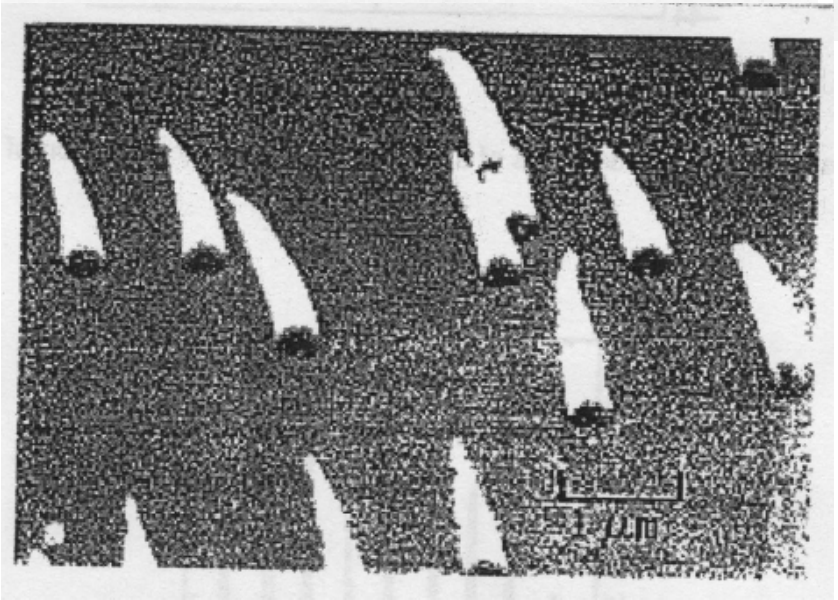

- **A scanning Electronic Micrograph of etch pits made by 26 keV/u ^{56}Fe ions with β=0.007**

Monopole Detectors: NTD (continued)

- Experiments are using alternating layers of NTD with different z/β. Later NTD are etched in different solutions like NaOH for several tens of hours and later scanned on a stereoscopic microscopes to find a holes left by highly ionizing particles .
- Typical sizes of NTDs are ~1-2 mm. After etching layer are reduced in size.
- Low β heavy ions with high z usually are used for NTD calibration

Monopole Search experiments

Accelerator	Type	Energy, GeV	Center of mass Energy	MM mass limit, GeV	Cross section, cm^2	MM charge	TECN	year
LBL	p+A	6.2	3.76	<1	1.e-40	<1	EMUL	1959
CERN	p+A	28.0	7.6	<3	1.e-35	<4	CNTR	1961
AGS	p+A	30.0	7.86	<3	2.e-40	<2	CNTR	1963
CERN	p+A	28.0	7.6	<3	1.e-40	<2	EMUL	1963
IHEP	p+A	70	11.9	<5	1.e-41		EMUL	1972
FNAL	p+A	400	28.3	<13	5.e-42	<24	CNTR	1974
ISR	p+p	60	60	<30	2.e-36	<3	PLAS	1975
FNAL	p+A	400	28.3	<12	5.e-43	<10	INDU	1975
FNAL	n+A	300	24.5		2.e-30		OSPK	1975
IHEP	p+A	70	11.9	<5	1.e-40	<2	CNTR	1976
CERN	p+p	56	56	<30	1.e-37	<3	PLAS	1978
CERN	p+p	63	63	<20	1.e-37	<24	CNTR	1978

Monopole Search experiments (continued)

Accelerator	Type	Energy, GeV	Center of mass Energy	MM mass limit, GeV	Cross section, cm^2	MM charge	TECN	year
SLAC	e+e-	29	28	<30	4.e-38	<3	PLAS	1982
CERN	p+p	52	52	<20	8.e-36		CNTR	1982
CERN	e+e-	34	34	<10	4.e-38	<6	PLAS	1983
CERN	p+p	540	540		1.e-31	1,3	PLAS	1983
SLAC	e+e-	29	29		3.e-38	<3	PLAS	1984
FNAL	p+ap	1800	1800	<800	3.e-38	>=1	PLAS	1987
CLEO	e+e-	10.6	10.6	<4	9.e-37	<0.15	CLEO	1987
CERN	e+e-	50-52	50-52	<24	8.e-37	1	PLAS	1988
PETRA	e+e-	35	35	<17	1.e-38	<1	CNTR	1988
TRISTAN	e+e-	50-61	50-61	<29	1.e-37	1	PLAS	1989
FNAL	p+ap	1800	1800	<850	2.e-34	>=0.5	PLAS	1990
CERN	e+e-	88-94	88-94	<45	3.e-37	1	PLAS	1993

Monopole Search experiments (continued)

Accelerator	Type	Energy, GeV	Center of mass Energy	MM mass limit, GeV	Cross section, cm^2	MM charge	TECN	year
CERN	Pb+A	160A	17.9	<8.1	1.9e-33	>=2	PLAS	1997
CERN	Au+A	11A	4.87	<3.3	0.65e-33	>=2	PLAS	1997
FNAL	p+ap	1800	1800	>260-420	7.8e-36	2-6	INDU	2000
FNAL	p+ap	1800	1800	>265-410	0.2e-36	1-6	INDU	2004
HERA	e+p	300	300		0.05e-36	1-6	INDU	2004
FNAL	p+ap	1960	1960	>369	0.2e-36	>=1	CNTR	2006

First Monopole Search experiment, LBL, 1959

- 1959 – Bevatron at LBL (H.Bradner, W.Isbell)
- 6.3 GeV/c momentum proton beam
- Nuclear Emulsion detector
- Targets: 0.005" Al, 0.5" Cu, 3mm polyethylene in 14.2 kG magnetic field
- Maximum beam integrated flux 10^{17} protons
- Cross section < 1.e-40 cm^2
- Monopole Mass limit <1 GeV

[H. Bradner and W. M. Isbell, Phys. Rev. 114(1959)603]

BNL AGS Monopole Search experiment, 1963

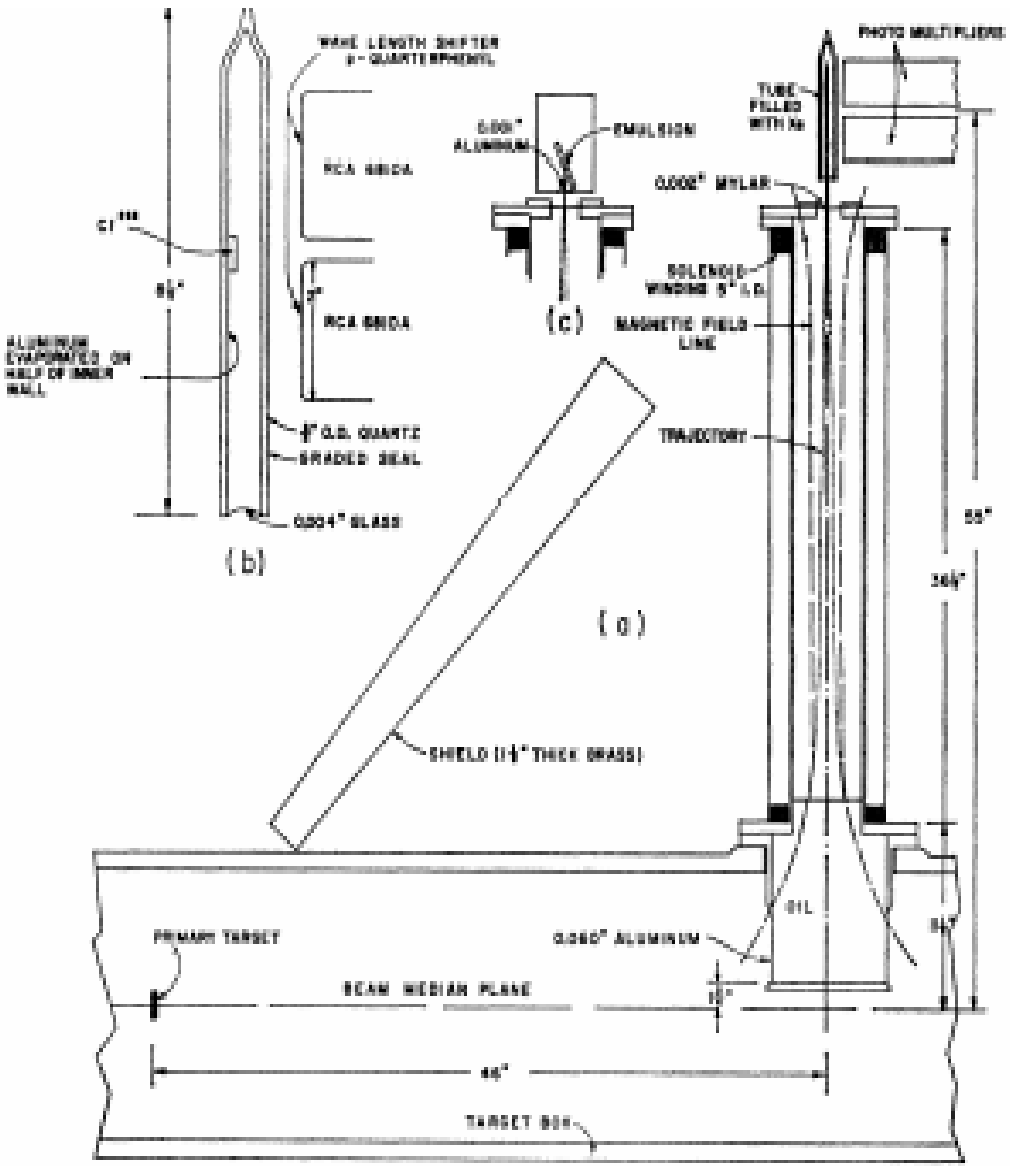

BNL AGS 30 GeV p beam interacts with Be,C,CH2, Al targets ~0.06". MM cross Al well, enters oil and transported by solenoid ~500-700 G to Xe viewed by 2 PMs and Nuclear emulsions. No MMs were found: σ_n<2x10^{-40} cm^2. m_{MM}<2.9 GeV.

[E.M.Purcel et al, Phys. Rev. 129(1963)2326]

MM Search Experiments, Compilation

(Giacomelli and Patrizii, hep-ex/0302011)

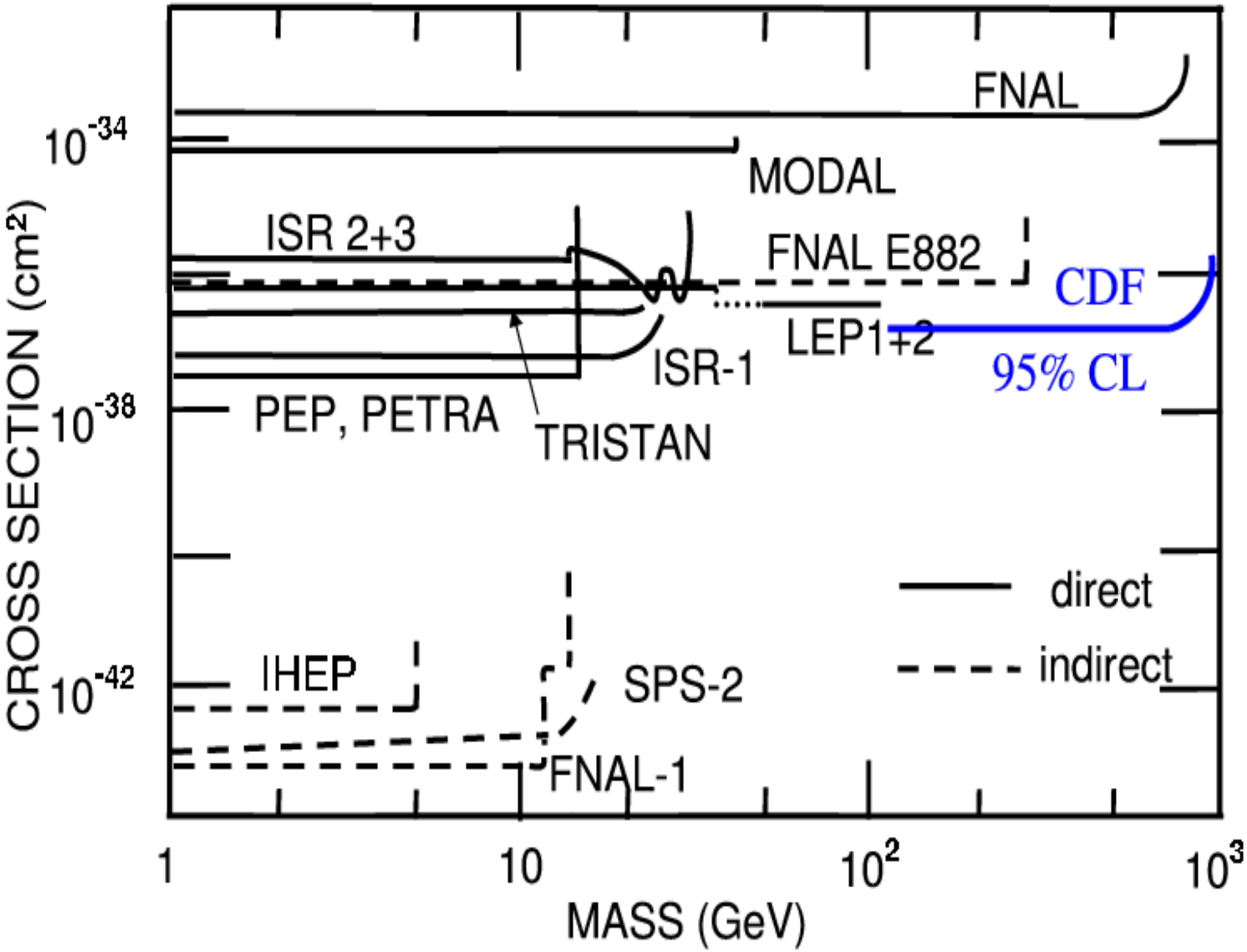

IHEP Serpukhov experiment 1972

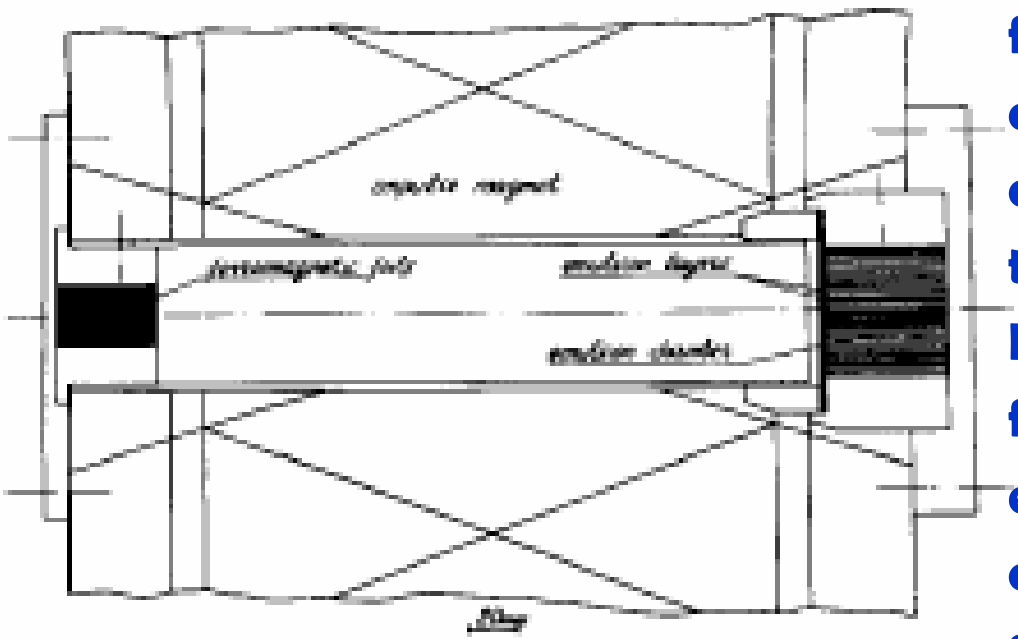

IHEP 70 GeV proton beam ferromagnetic foils and emulsion chamber 55x45x30 mm^3. MMs could seen as in emulsion, also trapped in ferromagnetic foils. Last were placed in pulsed mag. field of ~800 kG with nuclear emulsion. No MM signals. The cross section σ<1.2 10^{-43} cm^2 at 95% CL.

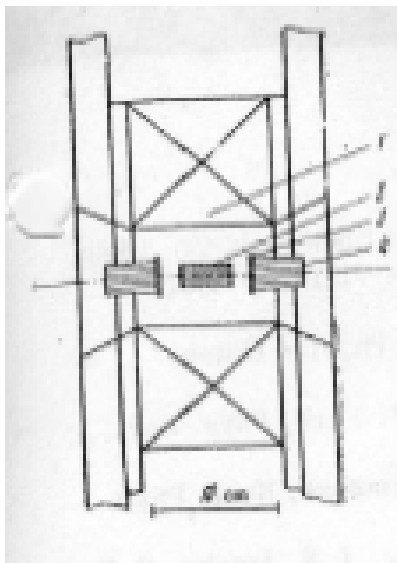

[Gurevich I.I. et al., Phys. Lett. 38B(1972)549]

MM detection system: 1–pulsed magnet, 2-ferromagnetic foils, 3-emulsion layers, 4-emulsion stack

FNAL-1 300-400 GeV experiment, 1975

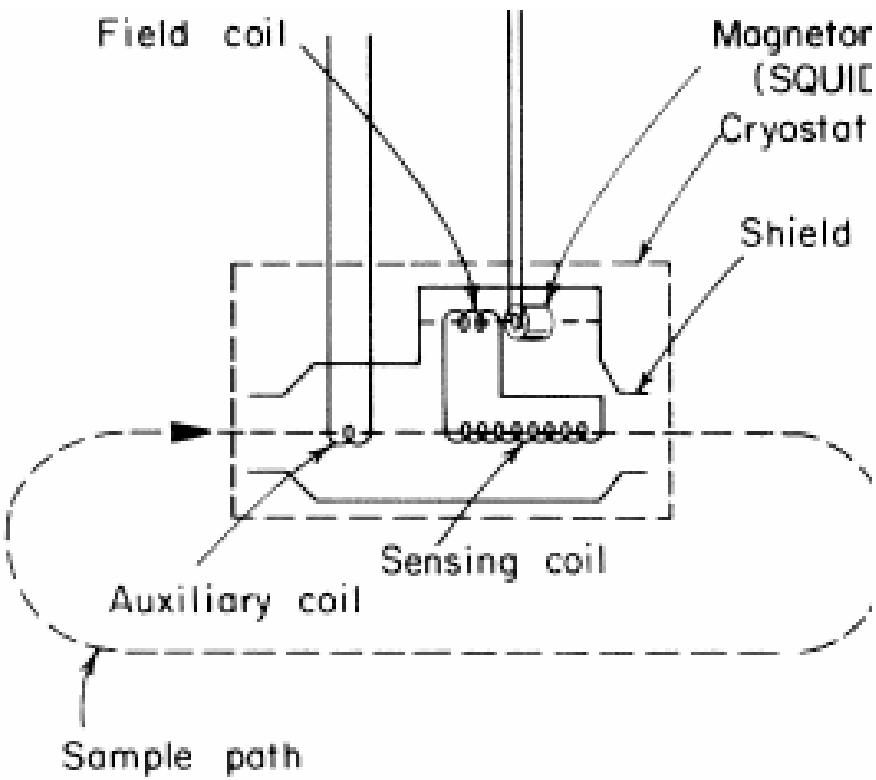

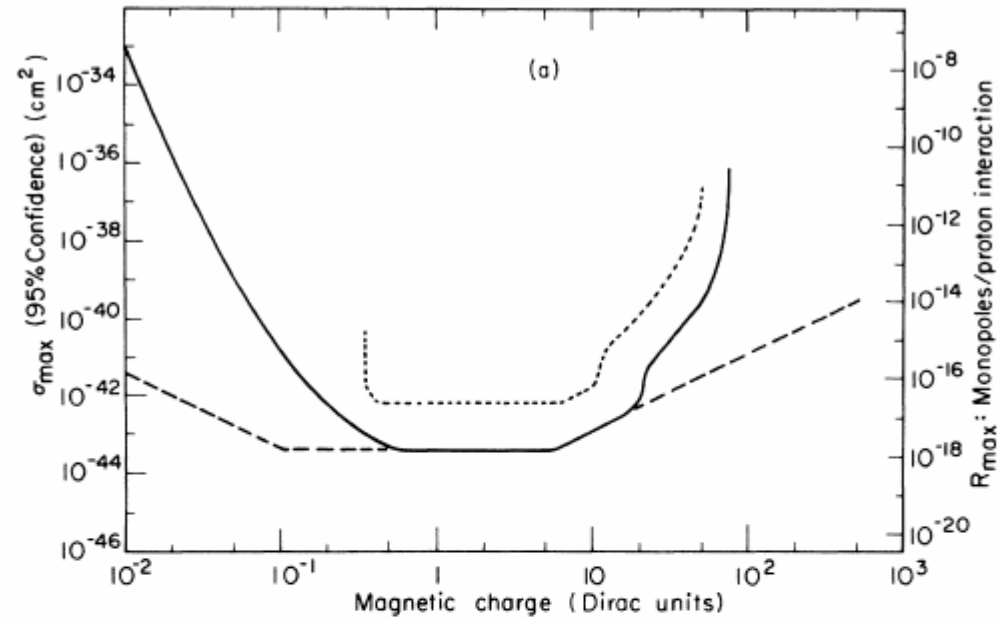

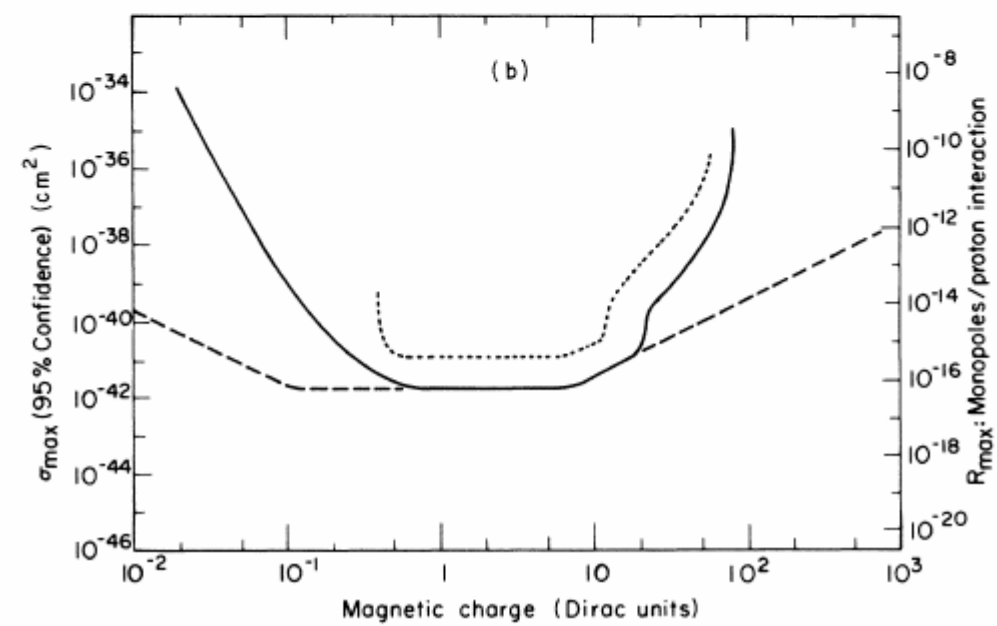

FNAL 300-400 GeV p beam on Fe,Al 41cm long targets. 2.5x1018 protons for 300 GeV

No MMs were seen: σ<1.0x10^{-43} cm^2 and MM mass < 12 GeV

[Eberhard P.H. et al., Phys. Rev. D 11(1975)3099]

CERN SPS-2 400 GeV experiment, 1983

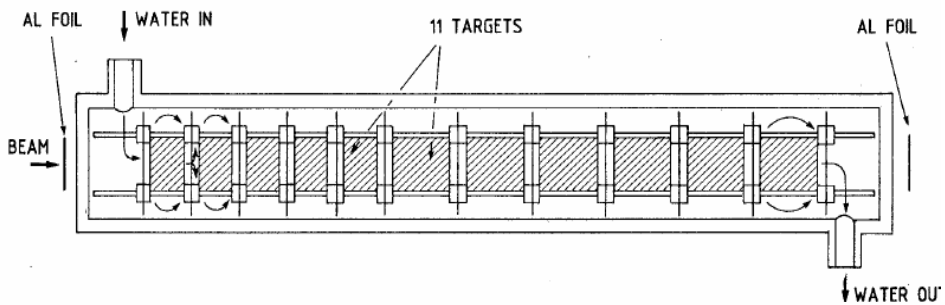

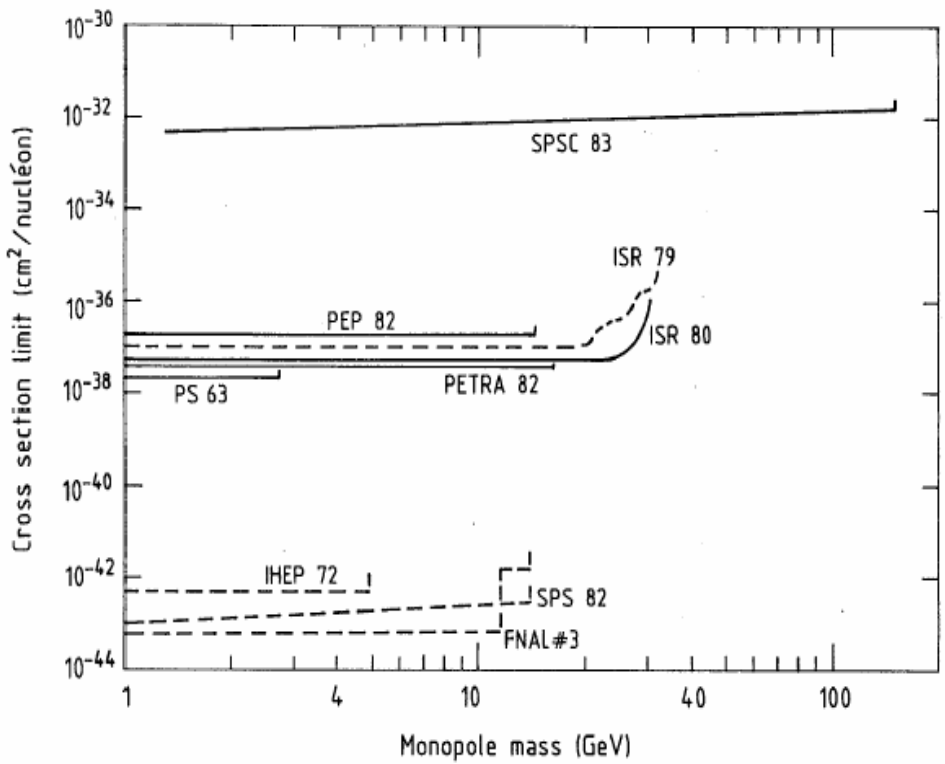

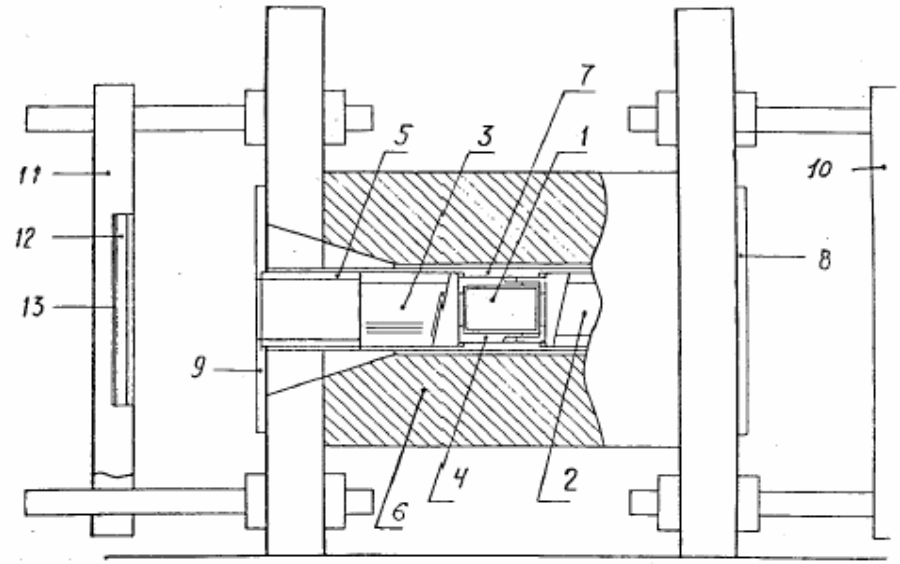

CERN SPS 400 GeV proton beam dump on series of FM collectors of W-Fe powder. Pieces of target were placed in Moscow Kurchatov Instit. Magnet (300 kG). No signal were found. For MM mass< 13.5 GeV the σ<1.10^{-43} cm^2 [CERN/EP 83-194]

FNAL E882 experiments, 2000

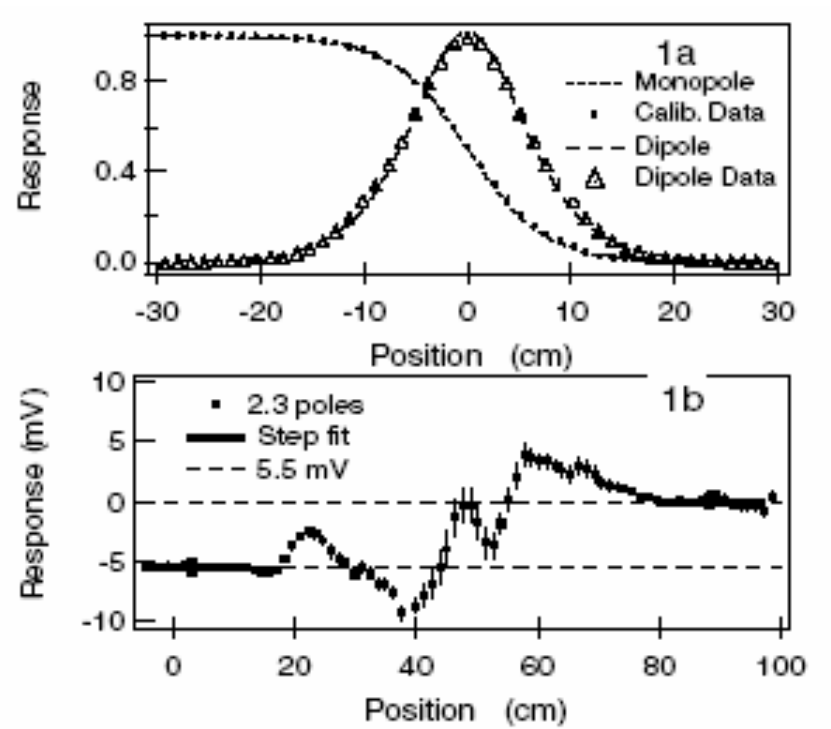

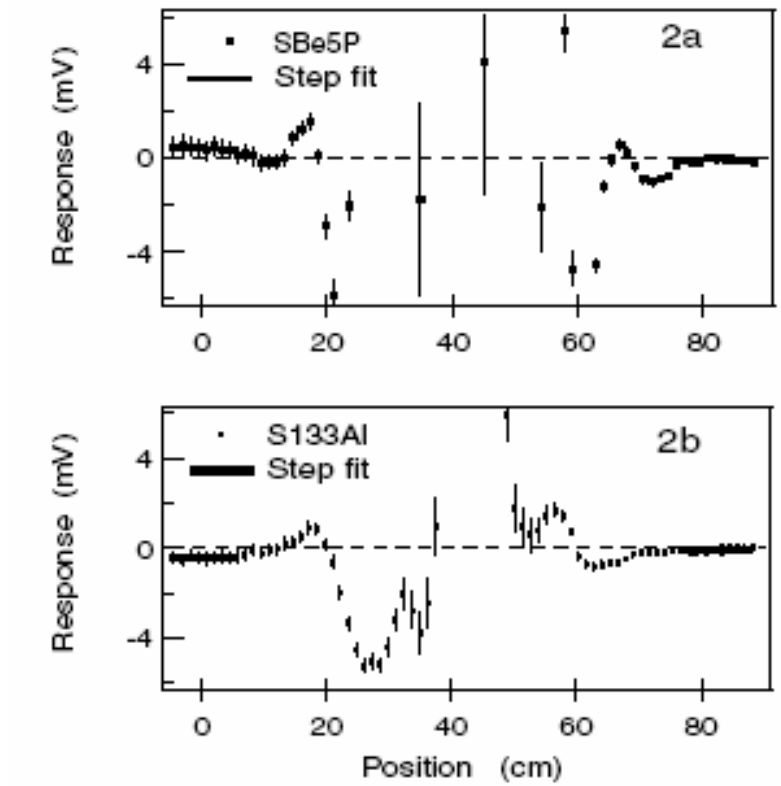

FNAL E882 experiment looked on low mass MMs trapped and bound in matter surrounding the D0 collision region of the FNAL Tevatron by means of two 19 diameter SC loops connected to SQUIDs. 7.5 diam.x7.5cm samples passed in 10cm diameter warm bore.

FNAL E882 experiment, 2000

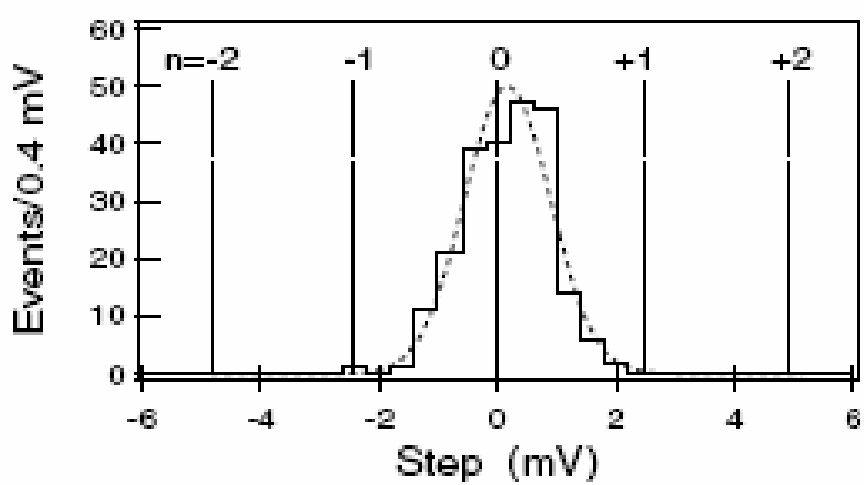

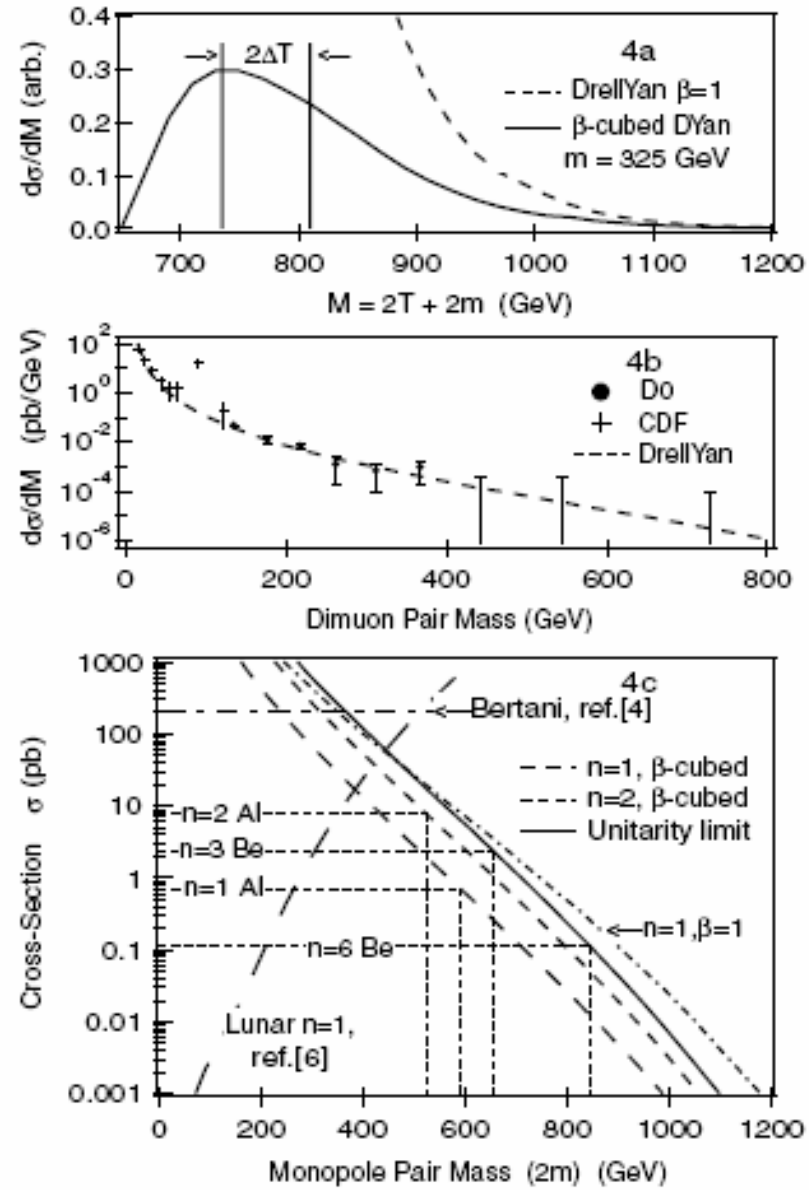

No signals were found. With DY mechanism the MM production cross section with charges 1,2,3,6 Is 0.7×10^{-37} cm^2. MM mass limits

m_{MM}>295 GeV |n|=1

m_{MM}>260 GeV |n|=2

m_{MM}>325 GeV |n|=3

m_{MM}>420 GeV |n|=6

[Kalbfleisch G.R. et al., Phys. Rev. Lett. 85(2000)5292]

FNAL E882 experiment, 2004

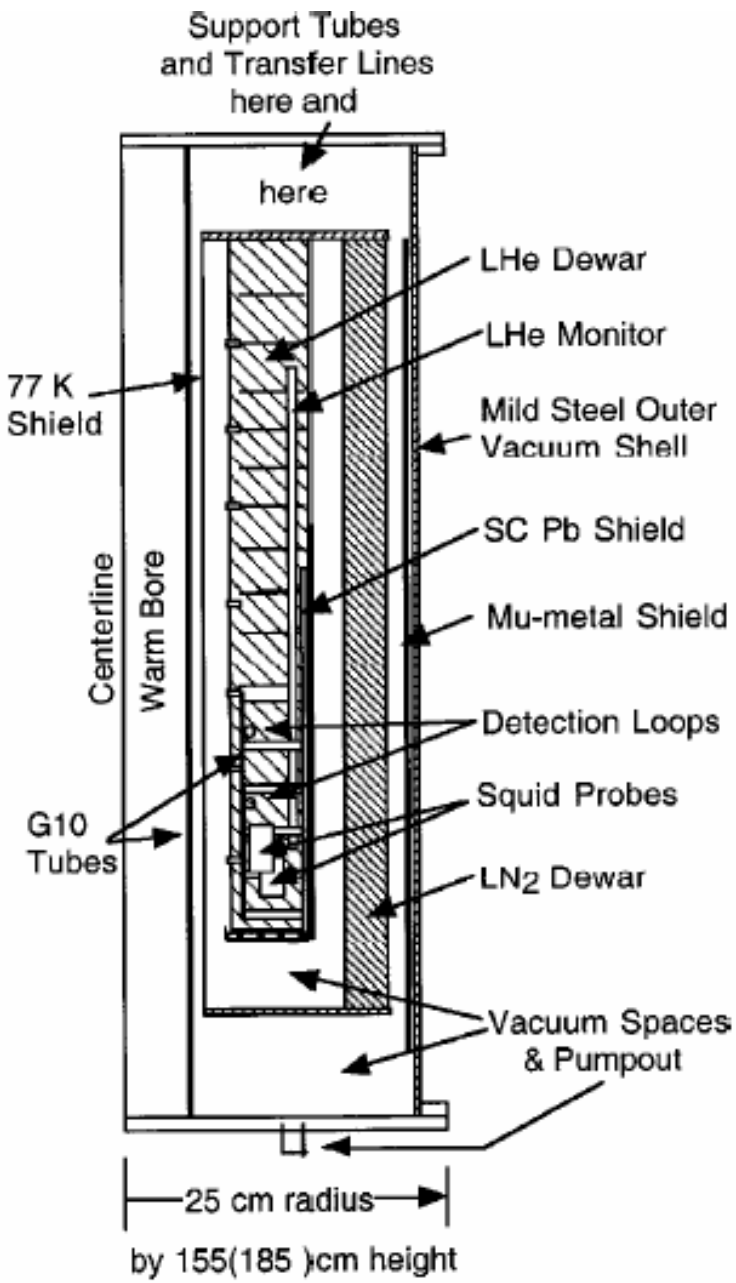

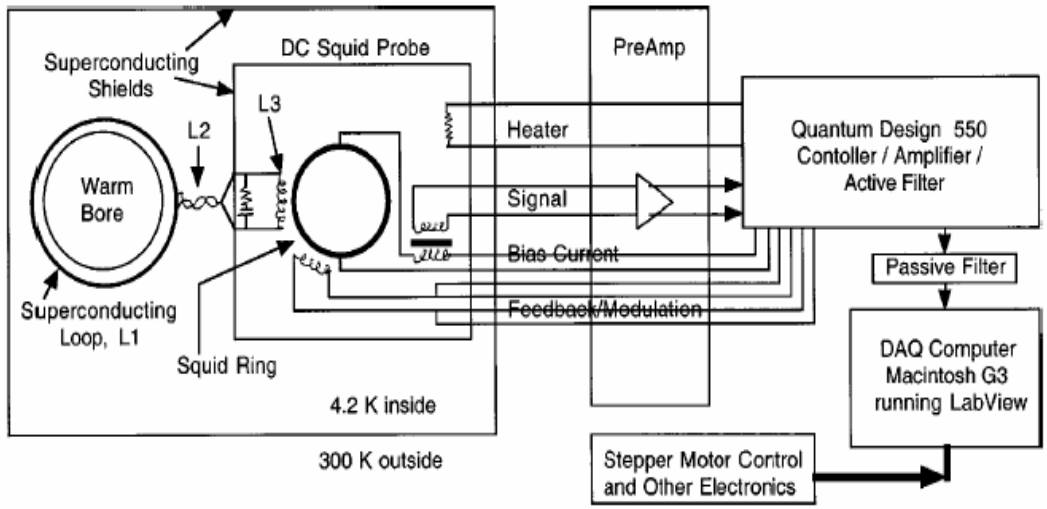

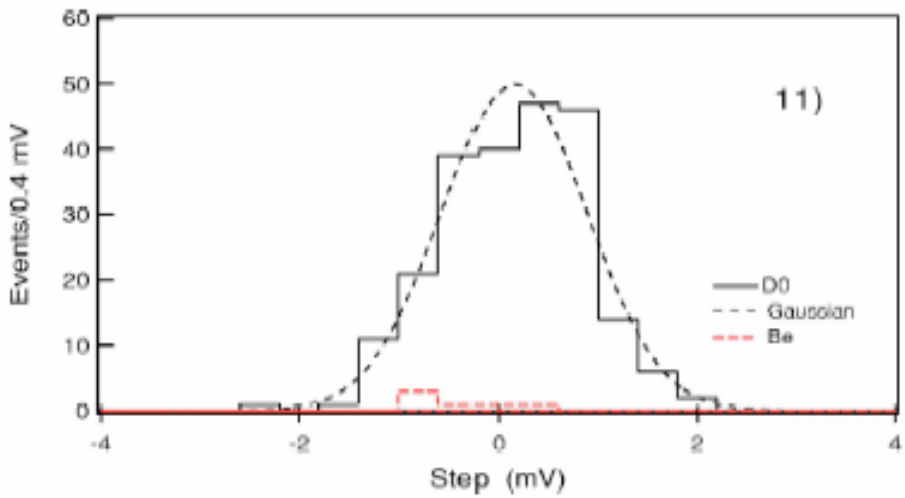

FNAL E882 experiment 2004

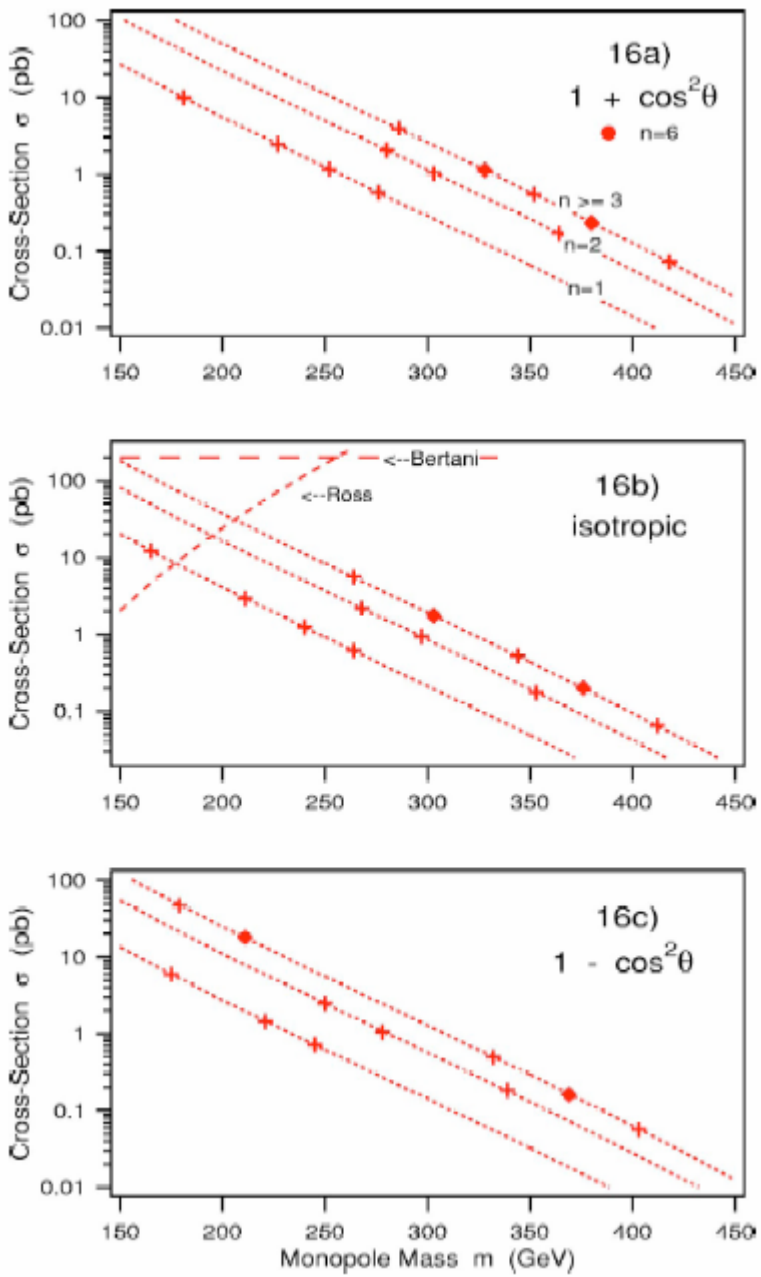

90% CL limits on MM production at FNAL Tevatron from 3 sets of samples from D0 and CDF detectors exposed to p-ap luminosities 175 pb^{-1} were obtained. It was assumed that MMs are trapped and bound in material surrounding D0 and CDF interaction region. Drell-Yan mechanism of MM production was used for cross section calculations. Lowest σ was obtained for the Al sample and is $0.7 \times 10^{-37} cm^2$ and mass>420 GeV/c^2.

[Kalbffleisch R.G. et al., Phys. Rev. D.69 (2004)

Conclusion on indirect MM search experiments

- Indirect search experiments assumes that MMs are stopped and then they can bind to the magnetic moments of the nuclei of the material and trapped.
- The interaction of MMs are strong enough to produce a bound state, which stay can for a long (several years) time
- Theoretical models estimate binding energies ~0.5-2.5 MeV comparable with shell model splitting
  [L. Gamberg, G.R. Kalbfleisch, K.A.Milton, Found.Phys, 30,543 (2000)]
- Other approach: "It is difficult to establish the validity of several hypotheses which to be used in order to interpret these negative results
  [G.Giacomelli, hep/ex0302011, 2003]

FNAL Tevatron experiment, 1990

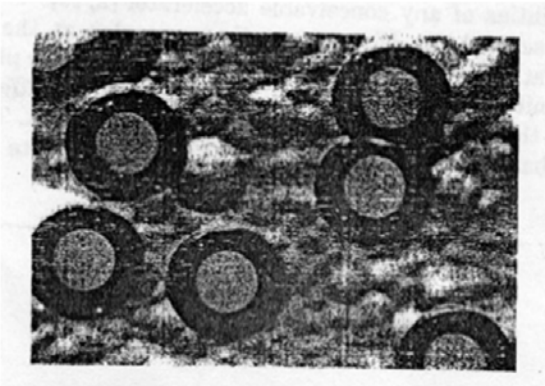

Microphotograph of CR-39 exposed to silphur ions of 200 GeV/nucleon. Holes Are due to the sulphur nuclei

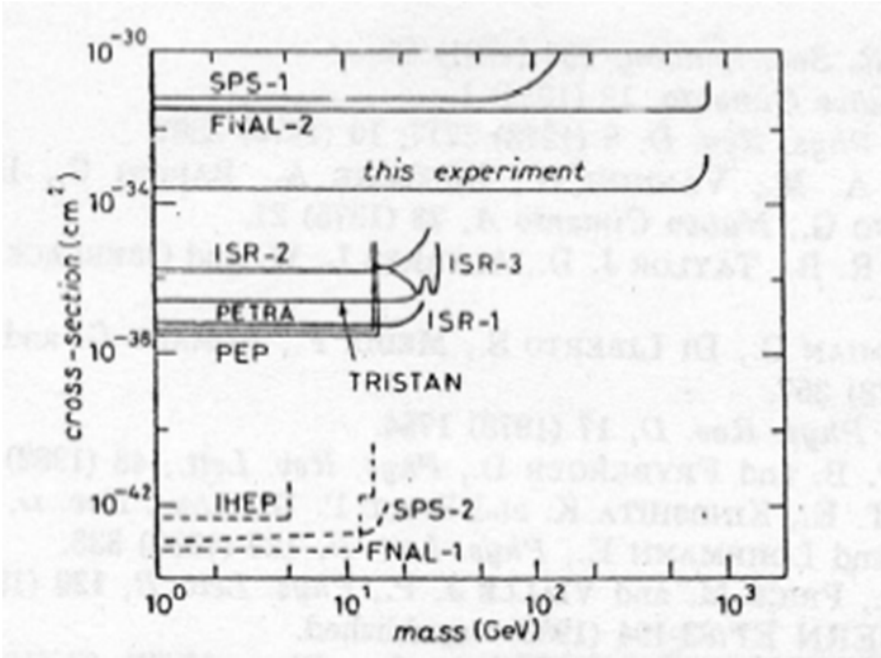

FNAL Tevatron $\sqrt{s}$=1.8 TeV using plastic NTDs: CR39, nitrocellulose, Lexan. 22 stacks 7x13 cm2 around beam pipe, 10 cm diameter,0.16 mm thick, stainless-steel at IP. 4 layers CR39 1.4 mm, 4 layers of Lexan 0.35 mm, layers of NC 0.3 mm. No MM signal. $\sigma<2.10^{-34}$ cm^2 at CL 95%, with a mass m<850 GeV/c^2.

[Bertani M. et al, Europhys. Lett. 12 (1990) 613]

CERN ISR-1 experiment, 1983

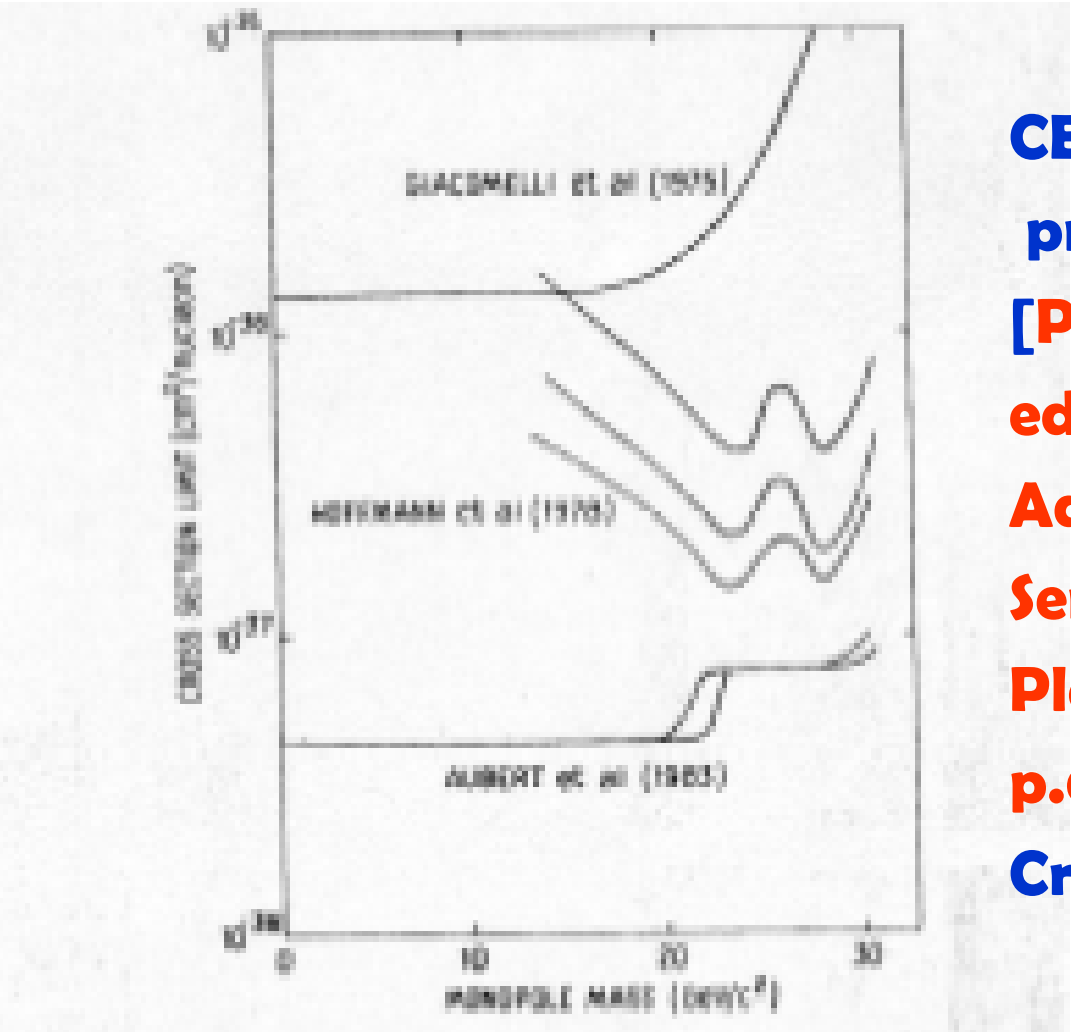

CERN ISR 60 GeV (pp and proton antiproton).

[Price M.J., in Monopole '83 edited by J.L. Stone, NATO Advanced Study Institute Series B, Physics, Vol. 111, Plenum, New York, 1983, p.621]

Cross section < 5×10^{-38} cm^2 .

CERN ISR-2 experiment, 1975

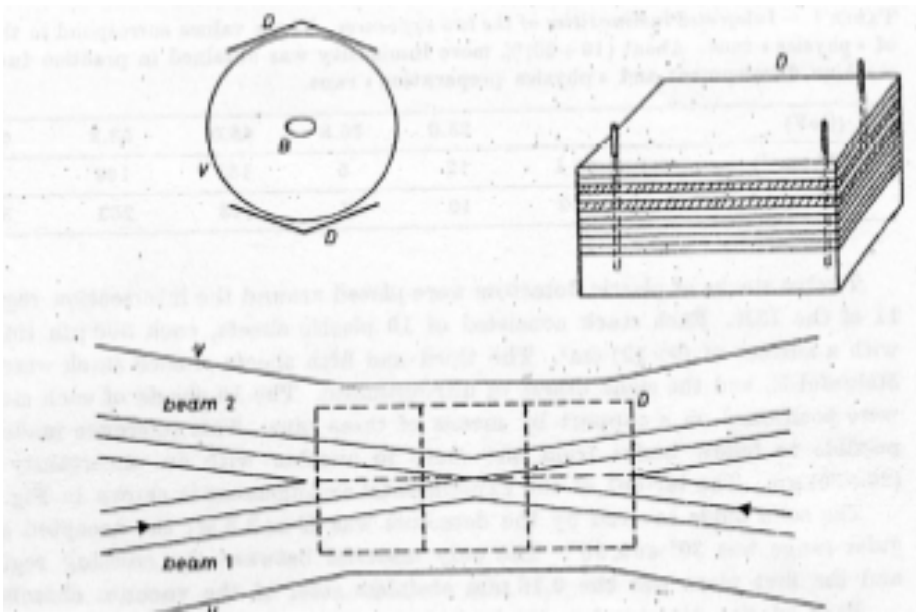

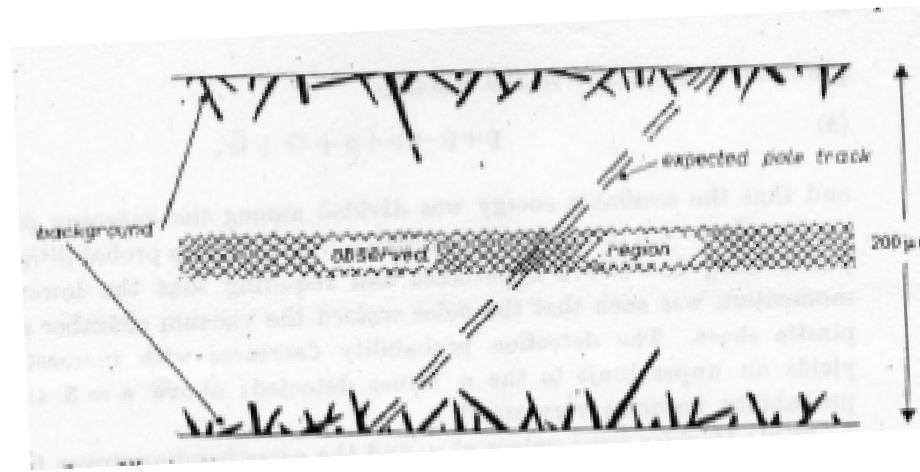

CERN ISR experiment at 60 GeV pp interactions. 12 stacks of detectors place around intersection region I1 of ISR. One stack has 10 sheets, each 200μm, 9x12 cm² surface. 2 Makrofol-E, 8 nitrocellulose. No MM signal was found. 95% CL cross section limit is 2×10^{-36} cm² and MM mass < 30 GeV/c². Ω = 3.5 sr.

[Giacomelli G. et al, Il Nuovo Cimento 28 (1975) 212]

CERN ISR-3 experiment, 1978

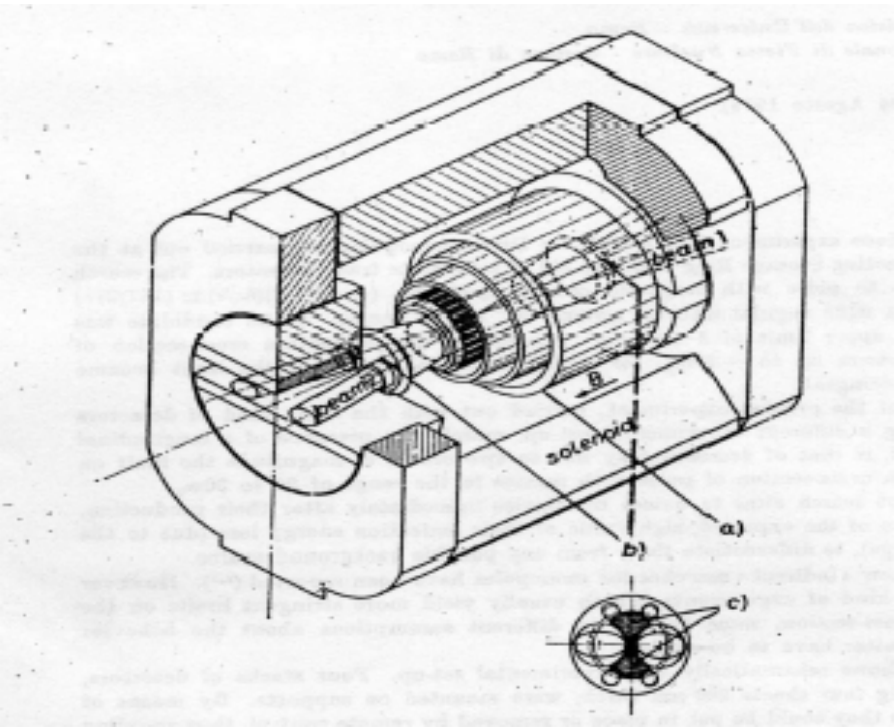

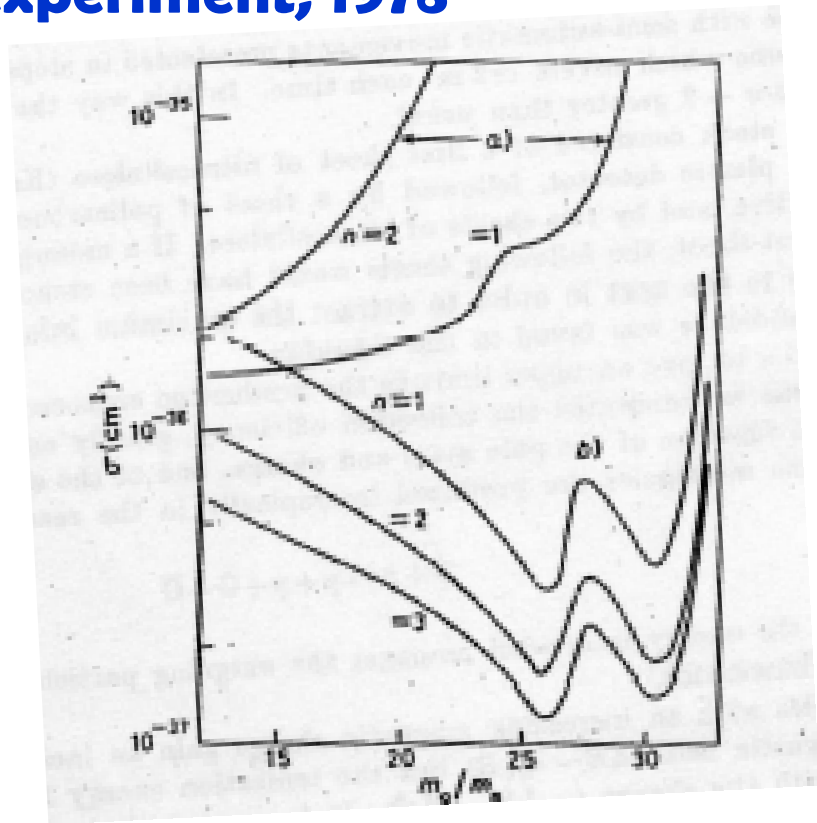

CERN ISR experiment at 56 GeV pp interactions. 4 stacks of detectors, each containing 4 sheets of 200μm thick, were mounted around intersection region I1 of ISR, outside steel 2mm thick. 3 nitrocellulose, 1 Makrofol-E. No MM signal was found. 95% CL cross section limit is 1×10^{-37} cm^2 and MM mass < 30 GeV/c^2.

[Hoffmann M. et al, Letter Al Nuovo Cimento 23 (1978) 357]

SLAC PEP experiment 1982

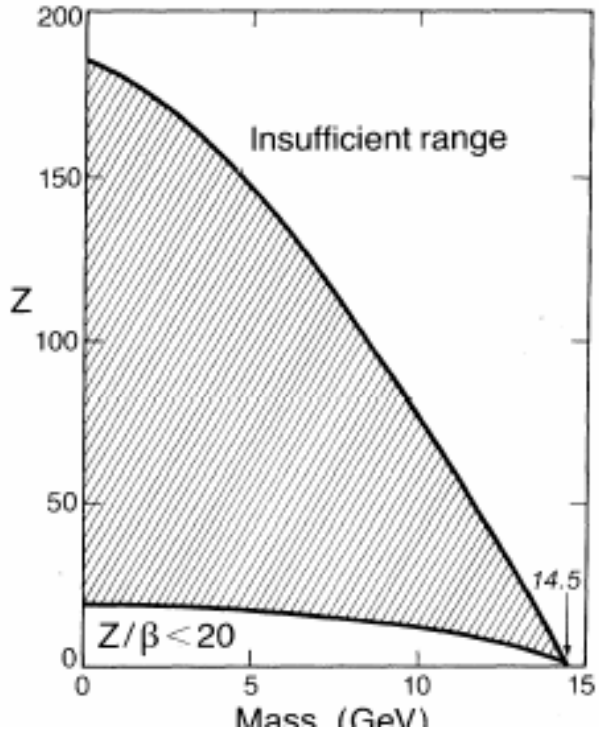

SLAC PEP e+e- collider at 29 GeV cms energy. Flat stacks of 75 μm Lexan and 600 μm CR-39 plastic sheets placed at IR-10 and IR-6. Size 15x46 cm2 covered ~4.6 sr solid angle. NTD located above 200 μm thick stainless-steel pipe. No candidates were found. Obtained limits are 1.4×10^{-36} (IR6) and 2.3×10^{-36} (IR10), which gives combined limit on 95% CL: 0.85×10^{-36} and MM mass < 14 Gev/c^2.

[Kinoshita K. et al, Phy. Rev. Lett. 48 (1982) 77]

SLAC PEP experiment, 1984

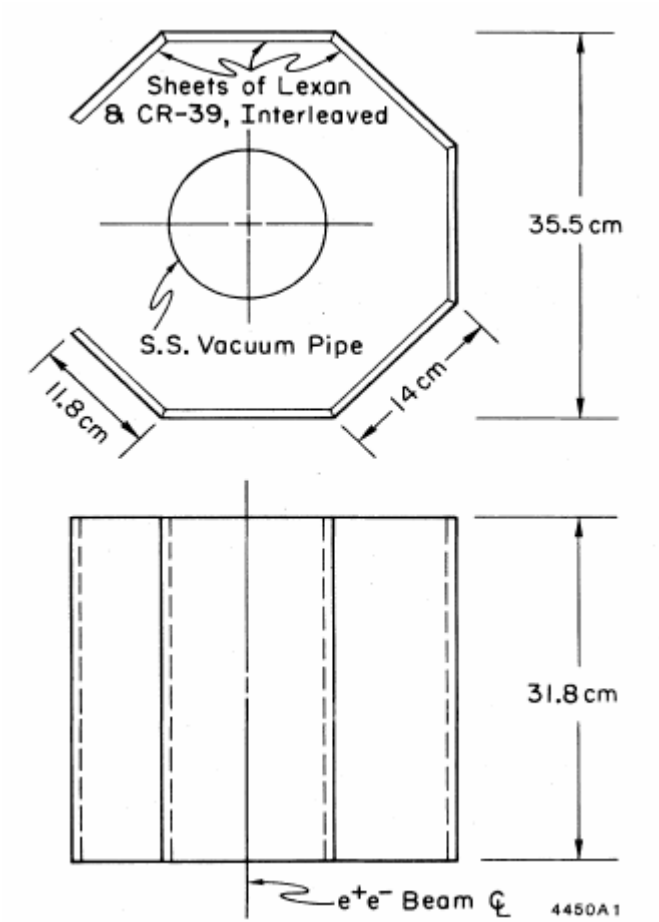

SLAC PEP e+e- collider at 29 GeV cms energy. Flat stacks of 75 μm Lexan and 600 μm CR-39 plastic sheets placed at IR-10 and IR-6. Size 15x46 cm2 covered ~4.6 sr solid angle. NTD located above 200 μm thick stainless-steel pipe. No candidates were found. Obtained limits are 1.4×10^{-36} (IR6) and 2.3×10^{-36} (IR10), which gives combined limit on 95% CL: $0.85\times10^{-36}\,cm^2$ and MM mass < 14 Gev/c^2.

[Fryberger D. et al., Phy. Rev. D29 (1984) 1524]

DESY PETRA experiment 1983

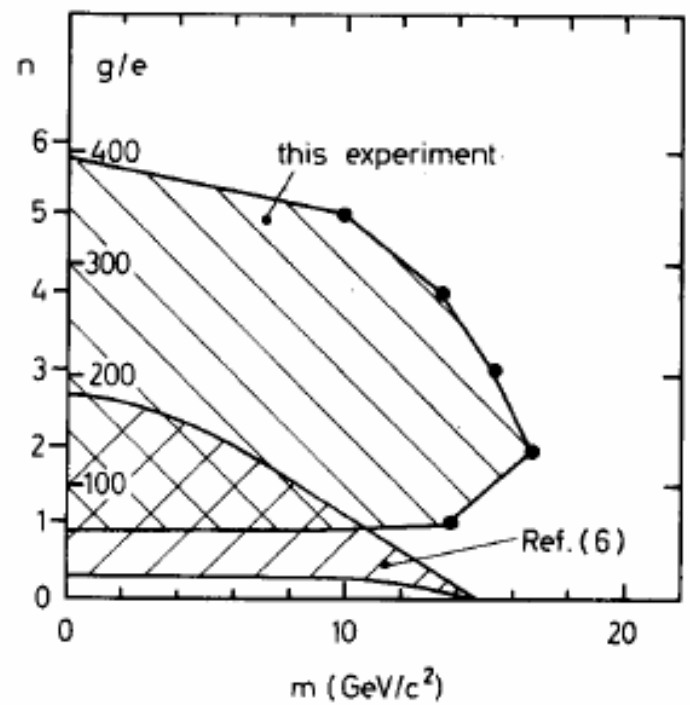

Search for heavily ionizing particles at DESY e+e- storage ring PETRA, cms energy 34 GeV. 7 cylindrical layers of Kapton foils, 40 cm long 18.4 cm diameter, 75 μm thick placed inside the vacuum chamber of the storage ring. Solid angle covered is 85% of 4π. The dE/dx>4GeV/gcm^{-2} for Kapton, insensitive to background. No MMs were found. 95% CL cross section limit is 4×10^{-38} cm^2, MM mass < 10 GeV/c^2 and charge (1-6)xg_M. Total integrated luminosity was 90 pb^{-1}.

[Musset P. et al., Phy. Lett. 128B (1983) 333]

KEK TRISTAN experiment, 1988

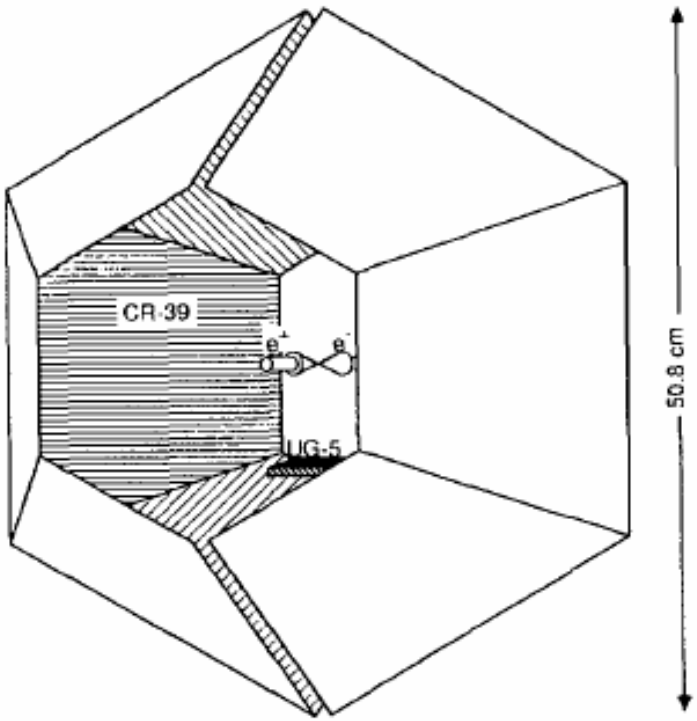

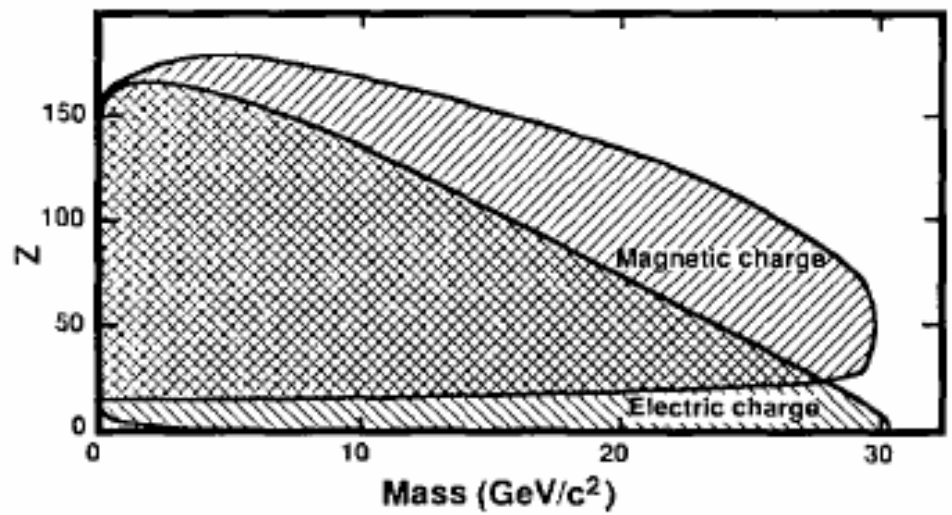

At the KEK TRISTAN detector highly ionizing particles were searched for in the e+e- annihilation at ⌧s=50-52 GeV. Integrated Luminosity 0.8 (50) and 4.(52) pb^{-1}. CR39 plastic (placed outside of vacuum beam tube) and UG-5 glass (placed inside) were used as NTDs. Solid angle=0.9x4π. No tracks found. 95% CL upper limit on cross section are 8×10^{-37} and 1.3×10^{-35} cm^2 for MMs with magnetic charges $g=68.5e=g_D$ and $g=2x\ g_D$ and respective maximum masses 24.1 and 22.0 GeV/c^2. [Kinoshita K. et al., Phy. Rev. Lett. 60 (1988) 1610]

KEK TRISTAN experiment, 1989

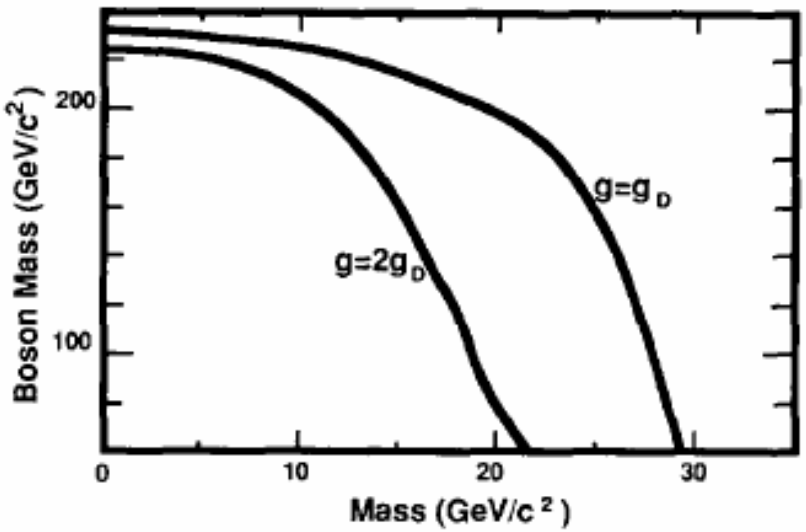

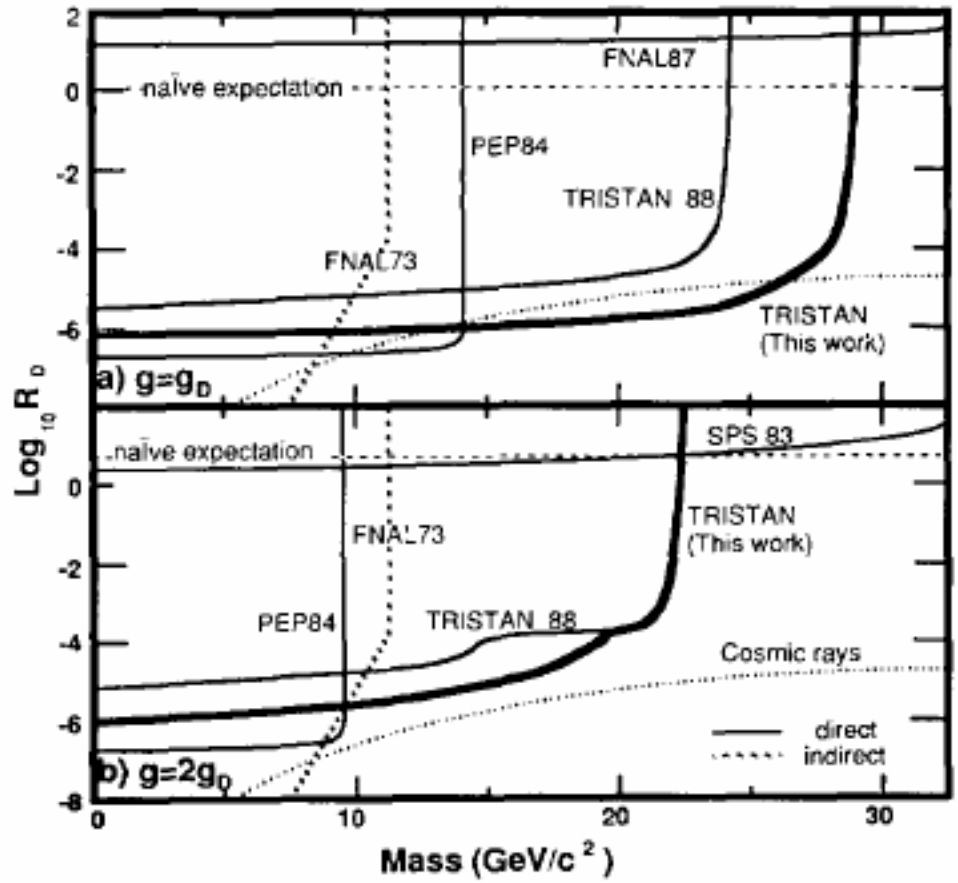

At the same KEK TRISTAN detector 30.2 pb –1 experiment was carried out with only outside CR-39 detectors at 50 and 61 GeV enrgies. No MM signals were found. The 95% CL upper limit on cross section is 1×10^{-37} cm² for MMs and mass< 29 GeV/c².

[Kinoshita K. et al., Phy. Lett. B, 228 (1989) 543]

CERN LEP Modal experiment, 1992

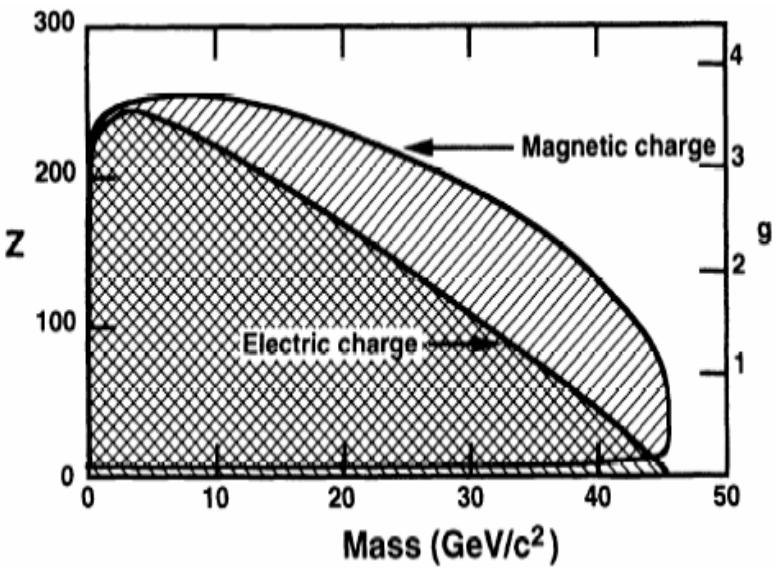

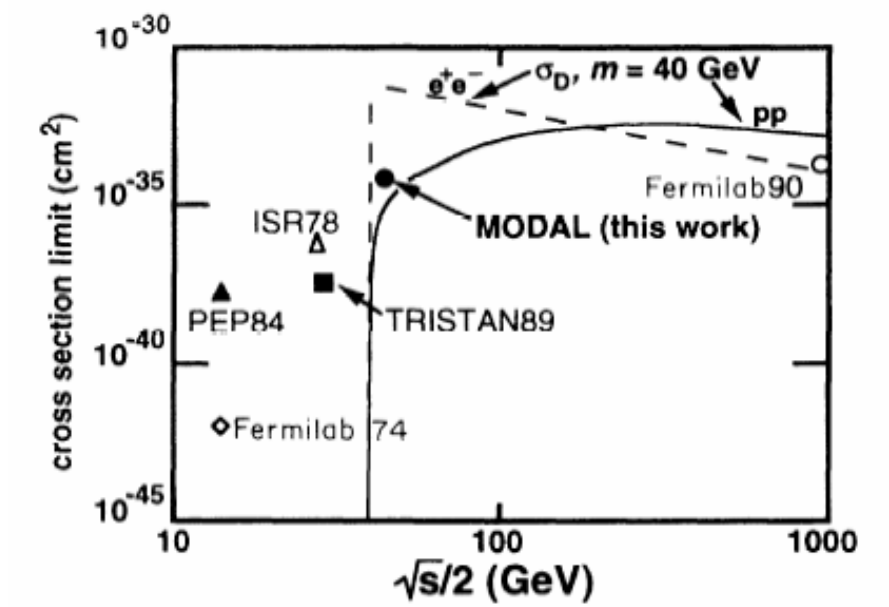

CERN LEP Modal experiment was searching for highly ionizing particles at the LEP e+e- $\sqrt{s}$=91.1 GeV energy by means of 12 stacks of CR-39 plastic NTDs placed at I5 LEP region, outside the vacuum pipe (0.5 mm thick) and covering solid angle ~0.86x4π. Integrated luminosity is 60 pb^{-1}. No MMs were found. The 95% CL production cross section limit is 7x10^{-35} cm^2. Search was sensitive to the MM charge of 0.1g_D < g < 3.6 g_D, where 68.5≡g_D. MMs mass limit is 44.9 GeV/c^2.

[Kinoshita K. et al., Phy. Rev. D46 (1992) R881]

CERN LEP OPAL experiment, 1993

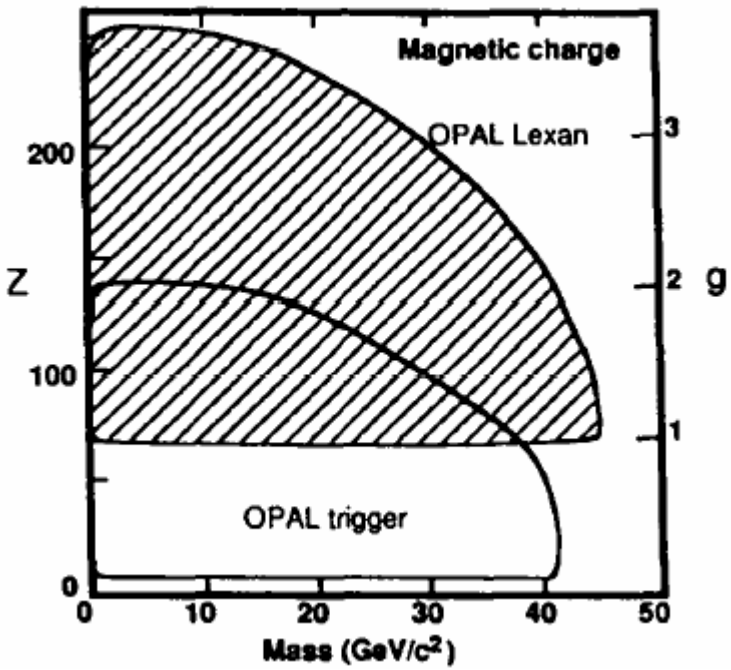

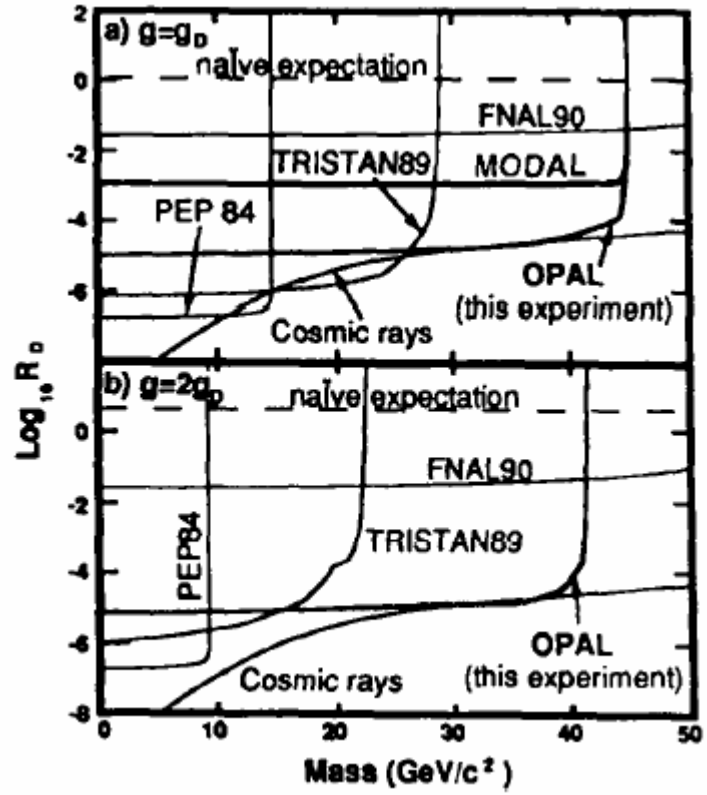

Searching for highly ionizing particles at the LEP e+e- $\sqrt{s}$=88-94 GeV energy at the OPAL intersection region by means of 3 layers of Lexan NTD wound around The OPAL beam pipe. Lexan sheets were 0.125 mm thick, covering 0.9x4π. No MMs were found. The 95% CL production cross section limit is 3×10^{-37} cm^2. Search was sensitive to the MM charge of $0.9g_D<g<3.6\ g_D$, where $68.5e\equiv g_D$. MMs mass limit is 45.0 GeV/c^2. [Pinfold J.L. et al., Phys. Lett. B, 316 (1993) 407]

LEP OPAL experiment @ CERN, 1999

A new direct search for pair-produced MMs has been performed with the OPAL detector by using the jet chamber (CJ) as a tracking device.

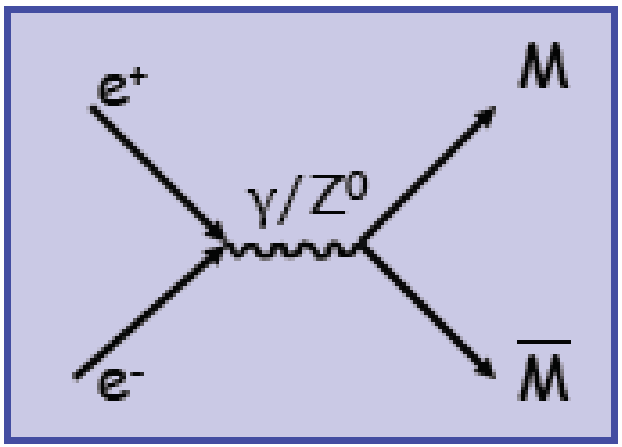

cross-sectional advantage over a search at hadron colliders

(no large radiative corrections)

Model independent analysis:

only based on the high ionization in the CJ

LEP OPAL experiment @ CERN, 1999

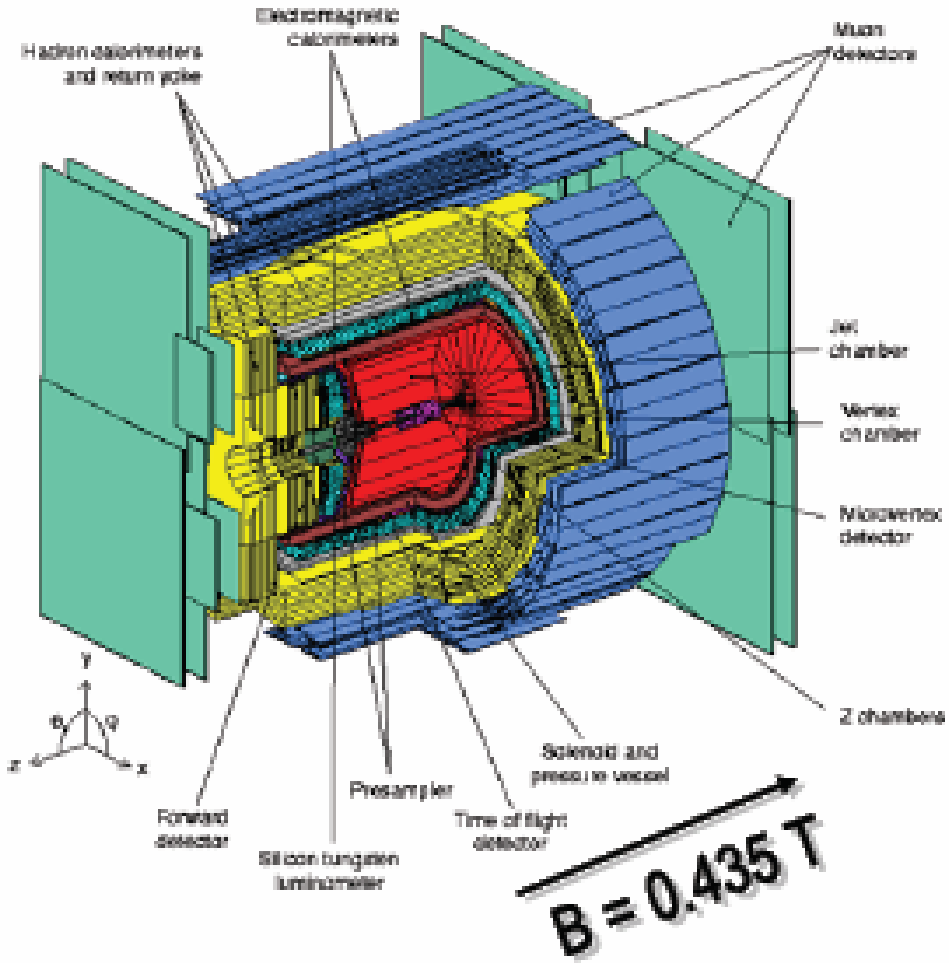

JET CHAMBER (CJ):

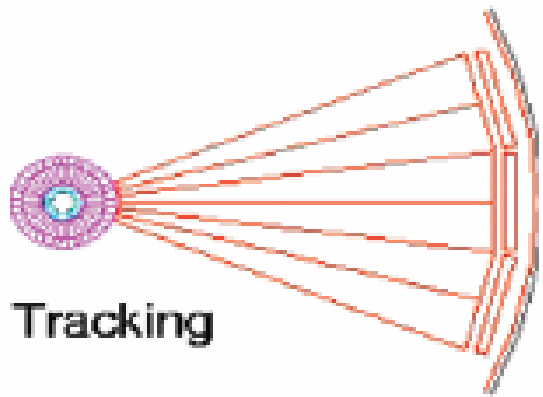

Cylindrical drift chambers:

- coordinate → tracking
- curvature → momentum
- dE/dx → particle ID

LEP OPAL experiment @ CERN, 1999

- Assuming

$$\alpha_{MM} >> \alpha$$

$$m_{MM} > \frac{m_{Z^0}}{2} = 45\,GeV$$

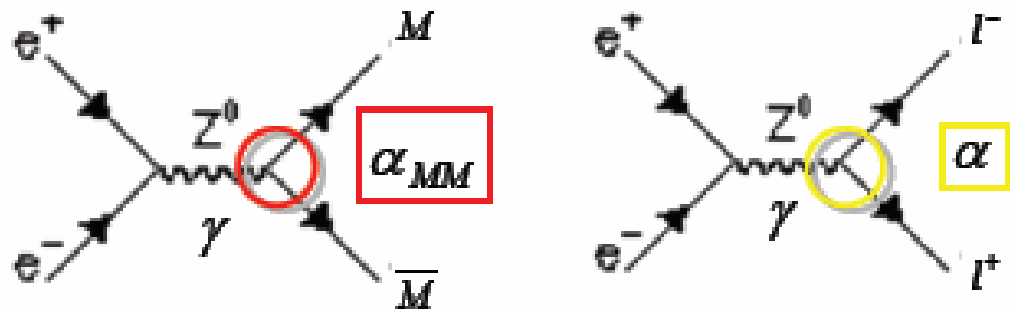

MM simulation:

1. Uniform azimuthal distribution

   and $(1 + \cos^2\theta)$ polar angle distribution (MM as fermion)

2. MM trajectory in the CJ obtained from the Lorentz force:

$$\begin{cases} \vec{B} = B \cdot \hat{z} \\ \vec{F} = g\left(\vec{B} - \vec{v} \times \vec{E}\right) \end{cases}$$

3. Monopole mass from 45 GeV to 104 GeV ($\sqrt{s} = 208\,GeV$)

   (each sample contains 1000 events)

LEP OPAL experiment @ CERN, 1999

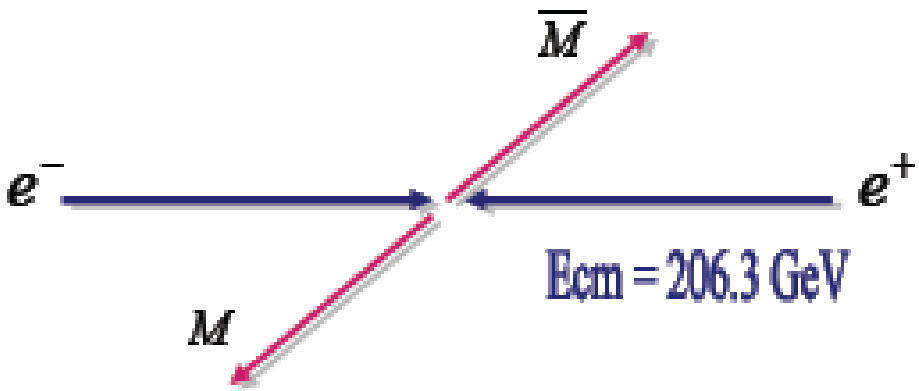

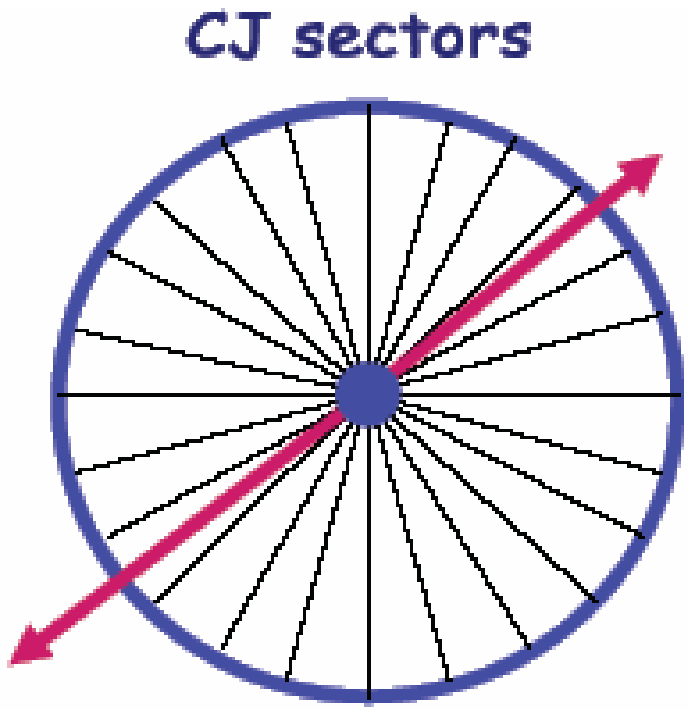

MM signal topology

- Back-to-back tracks

  → two opposite CJ sectors with an high energy release

- High ionization

  → most CJ hits contain enough charge to create an overflow

LEP OPAL experiment @ CERN, 1999

Sub-sample of LEP2 data collected when single hit acquisition was ON

$$\sqrt{s} = 206.3\ GeV$$

$$L = 63\ pb^{-1}$$

Good signal selection efficiency for monopoles with:

- $g \geq g_D$
- m_M: 45 ÷102 GeV

HERA H1 experiment @ DESY, 2005

The first direct search for Monopoles produced in e^+p

Two models:

$$e^+ p \rightarrow M\,\overline{M}\;e^+ p$$

$$e^+ p \rightarrow M\,\overline{M}\;e^+ X$$

$\sqrt{s} = 300$ GeV

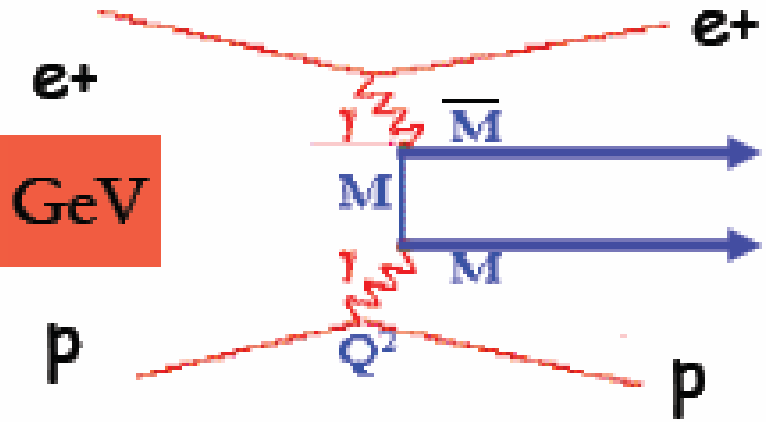

MMs
- Production time range: 1995 – 1997
- Stopped in the beam pipe surrounding the H1 interaction point
- Trapped (they are stable)

Later
- The beam pipe was cut into long strips
- MM detected with a superconducting coil (SQUID magnetometer)

Luminosity = 62 ± 1 pb^{-1}

HERA H1 experiment @ DESY, 2005

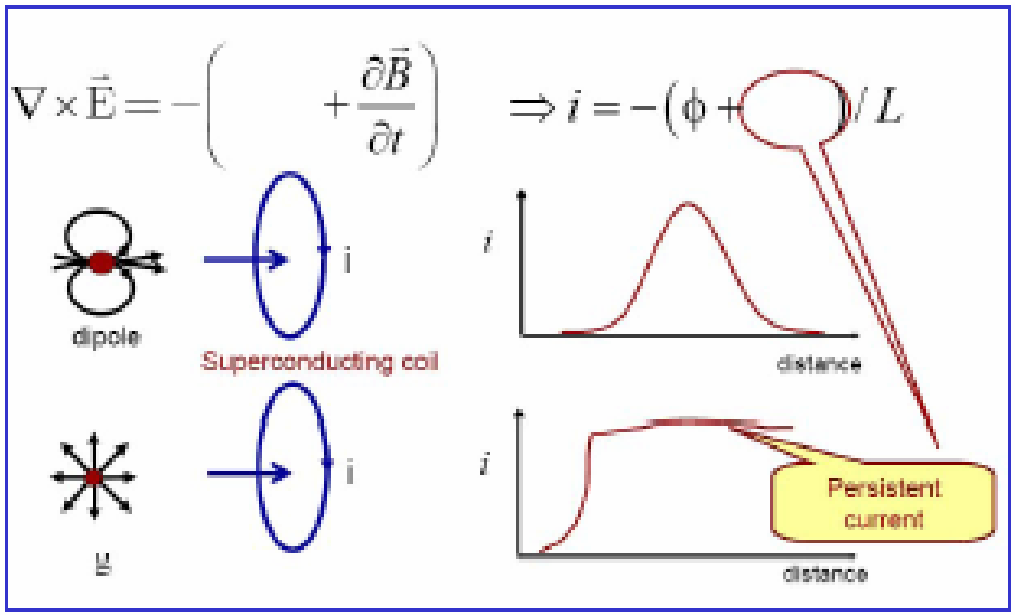

MMs "detector"

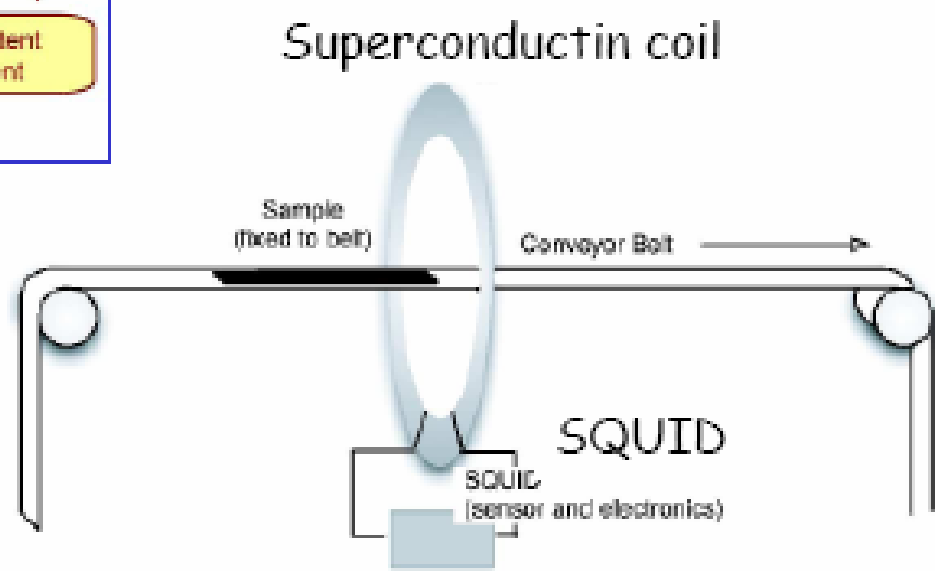

No monopole signal

Model dependent upper limits for monopole pair production m_M<150 GeV and charge g = 1-6 g_D

HERA H1 experiment @ DESY, 2005

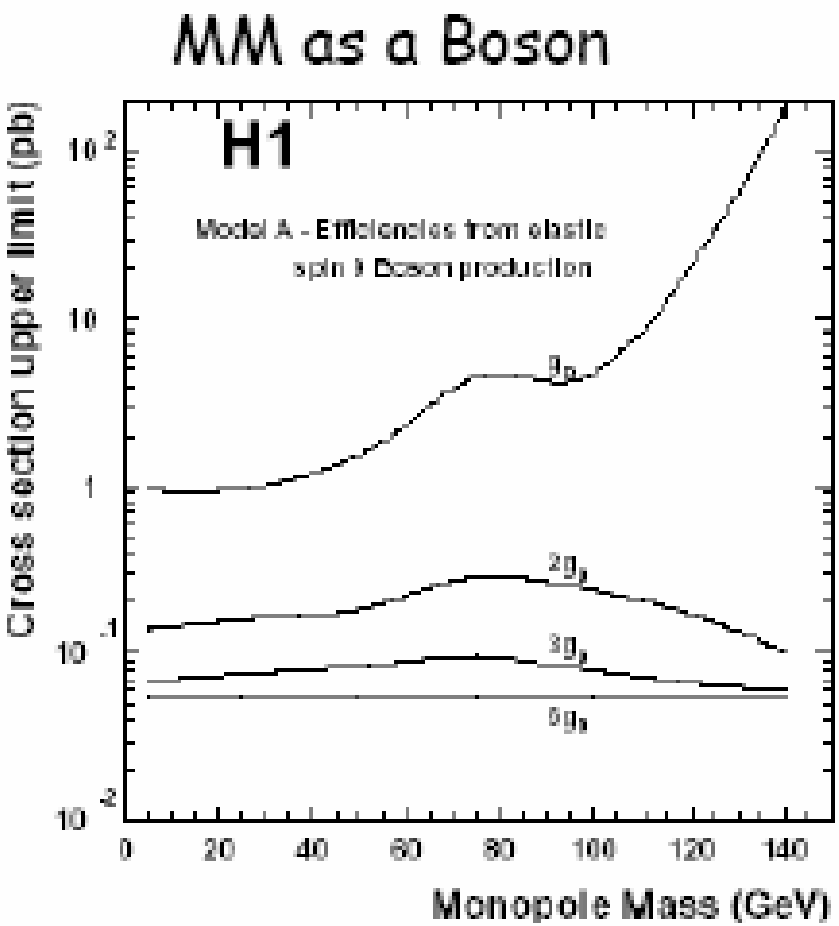

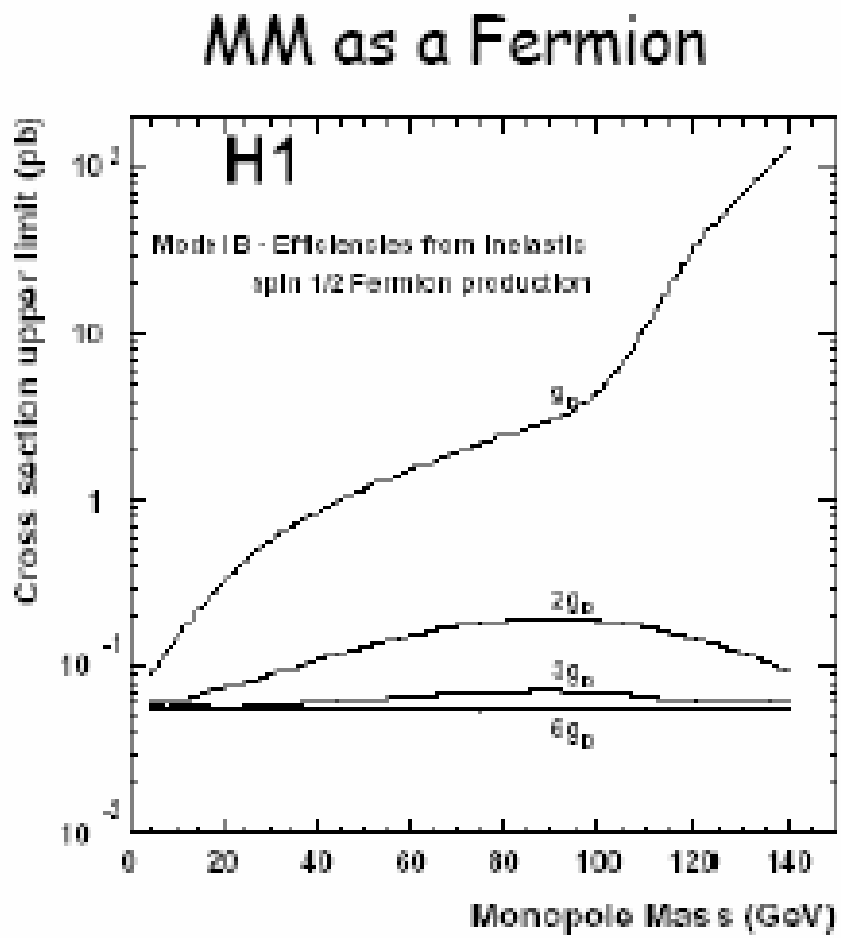

[Aktas A. et al., The European Physics Journal, C 41(2005)133]

FNAL CDF Monopole Search experiment, 2006

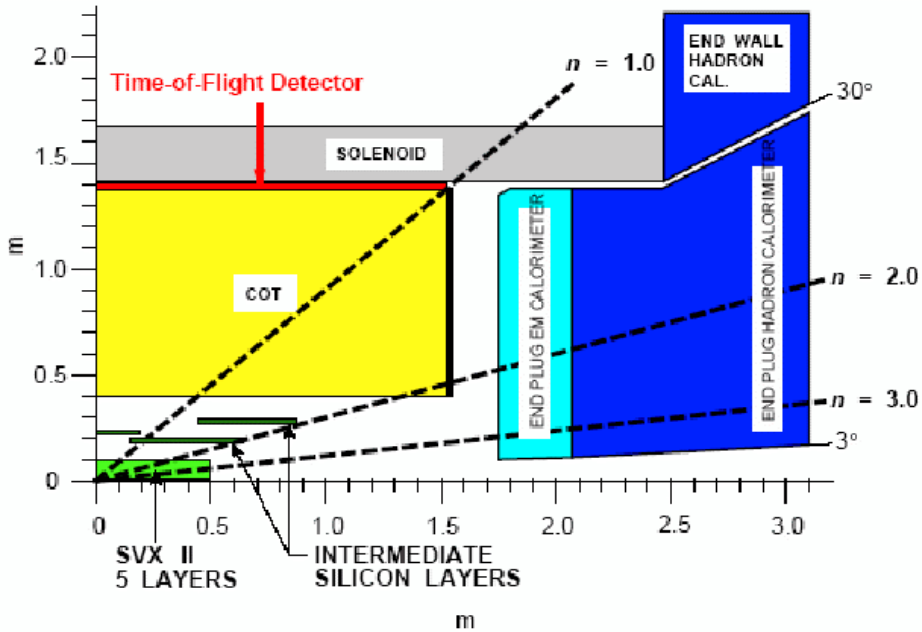

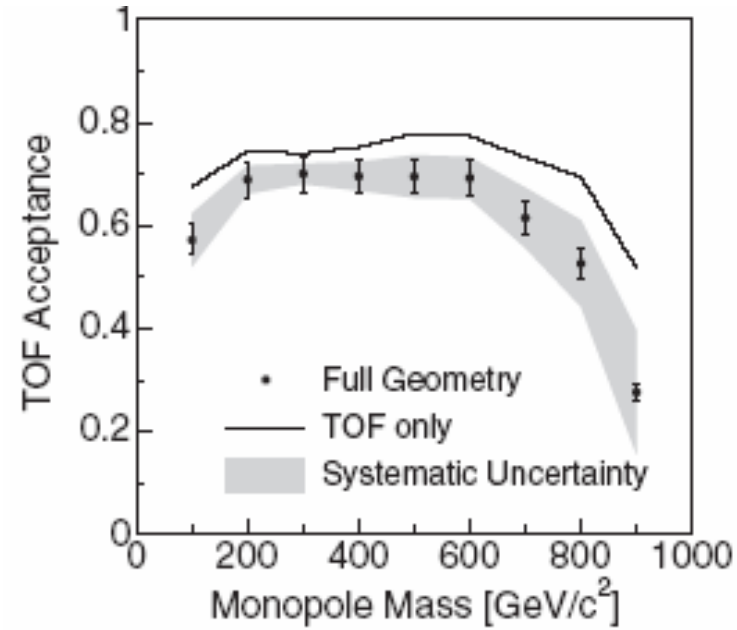

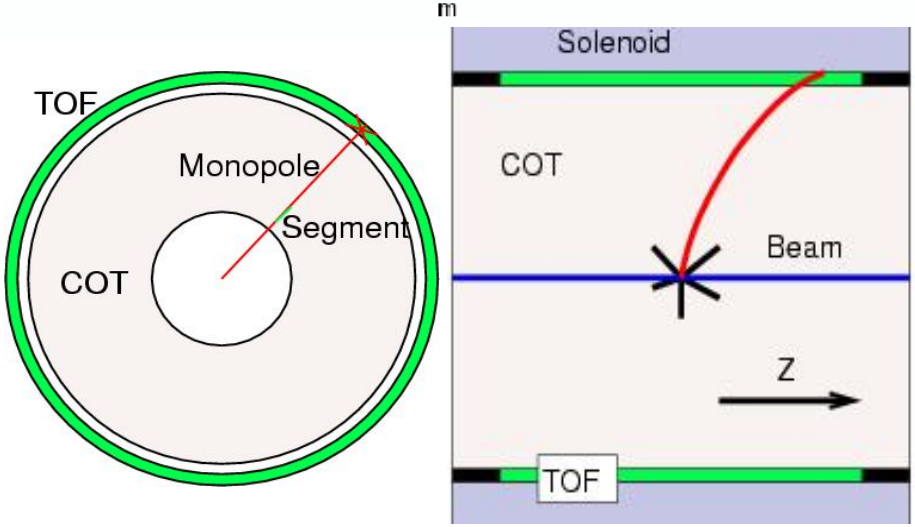

FNAL CDF Monopole Search experiment, 2006

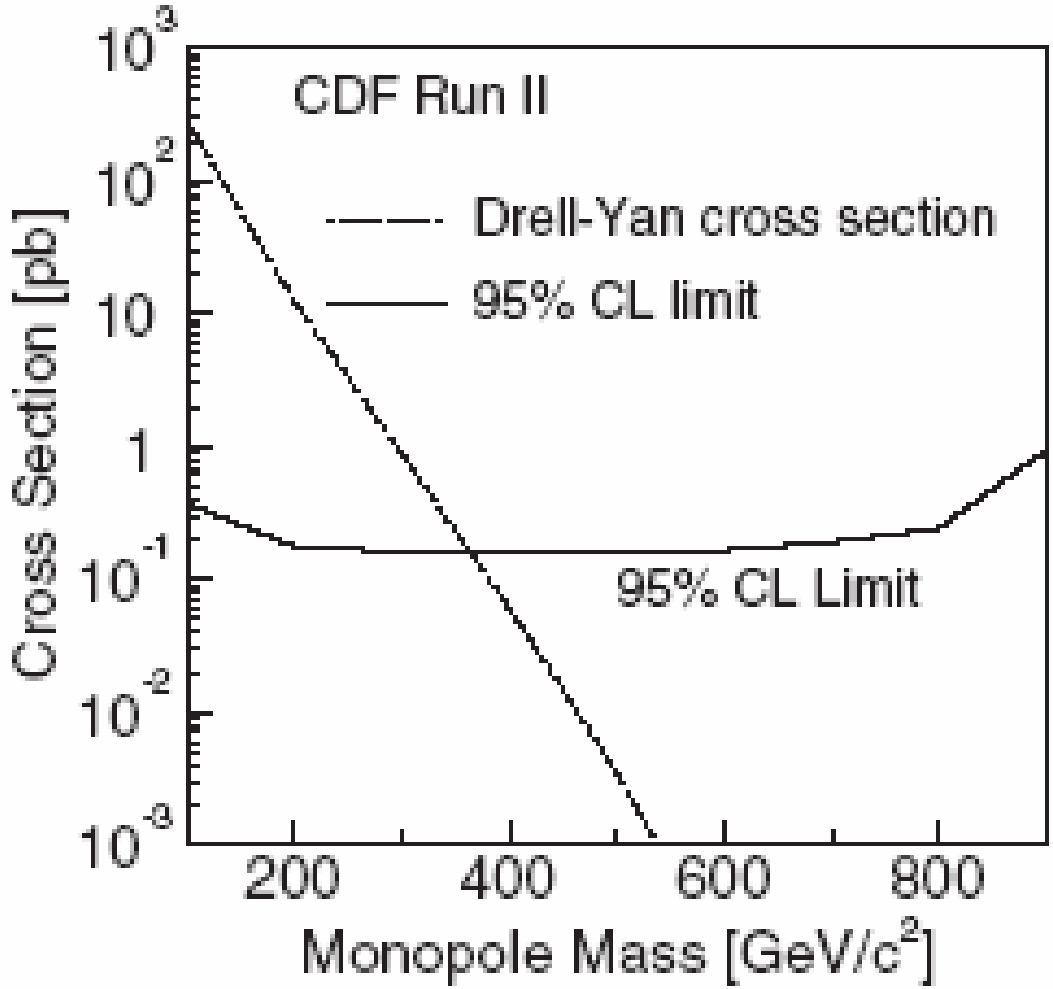

Search for pair produced MM in 35.7 pb^{-1} proton antiproton collisions at $s^{1/2}$=1.96 TeV at FNAL CDF experiment. No MM were found, corresponds to a 95% CL cross section limit σ<0.2 pb for a MM mass between 200 and 700 $GeVc^2$. Assuming DY mechanism of pair production, the MM mass limit is set to m>360 GeV/c^2.

[Abulencia A. et al., Phys. Rev. Lett. 96(2006)201801]

LHC MOEDAL Monopole Search experiment

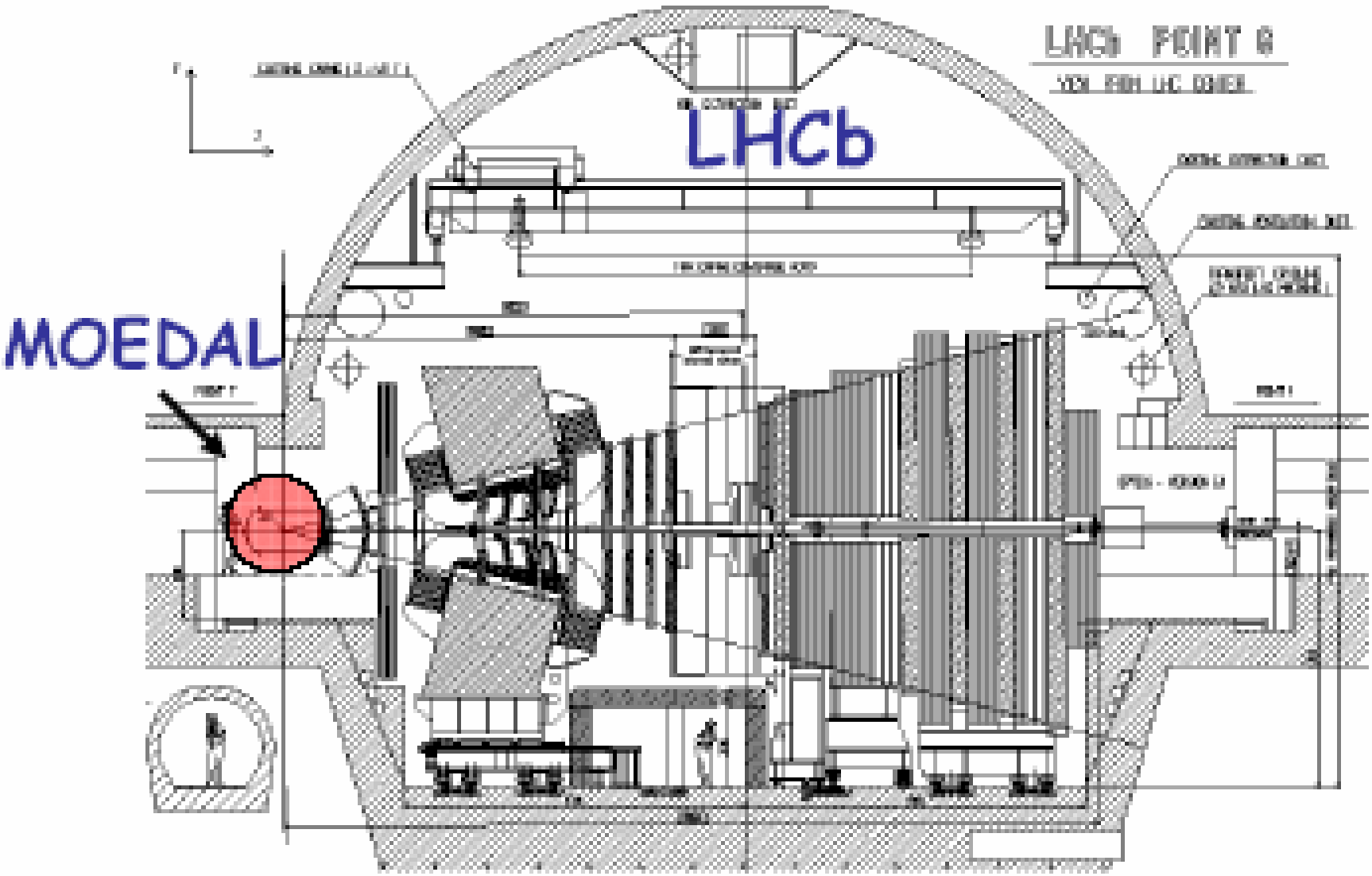

[Pinfold J.L. et al., http://moedal.web.cern.ch/moedal/]

The Conceptual Design of MOEDAL(3)

- Light aluminium frame containing five plastic sheets per triangle element (Lexan-CR39-Lexan-CR39-CR39-lexan). Total thickness ~ 5 mm.
- Alignment of monopole track within the module ~20 microns (using dowel pins)
- All triangular elements do NOT have to be installed. The design allows for access "panels" to LHCB vertex vacuum region.
- Frame holds plastic so that tracks are as normal as possible to the plastic, and racks reconstructed can be pointed to the

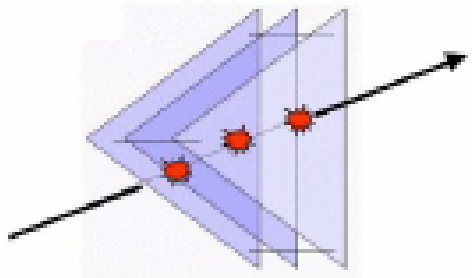

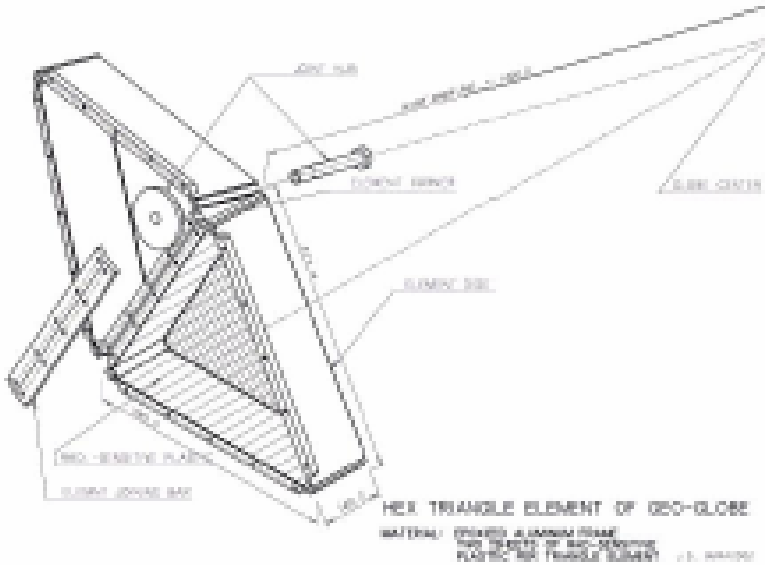

Future Monopole Search experiment

Projected Sensitivity of the MOEDAL Monopole Search

Assuming a Drell-Yan production mechanism for monopole pair production we can extrapolate to LHC energies using results from lower energy scaling studies:

$$\frac{d\sigma}{dmdy}\Big|_{y=0} = \frac{44 \times 10^{-30}}{s^{3/2}} \times e^{-25.3m/\sqrt{s}} \frac{\mathrm{cm}^2}{\mathrm{Gev}/c^2}$$

To obtain the cross-section for monopole pair production with mass $M = x.(s/2)^{1/2}$ we integrate the above expression above m=2M. Assuming no phase space suppression:

$$\sigma(M) \approx (68.5)^2 \times \frac{1.74 \times 10^{-30}}{s} \times e^{-25.3 \times 2M/\sqrt{s}} \mathrm{cm}^2$$
$$\approx 4.2 \times 10^{-35} \times e^{-25.3 \times 2M/\sqrt{s}} \mathrm{cm}^2$$

Running for one year (10^7 s) at a luminosity of 5×10^{32} cm^2 s^{-1} the sensitivity of the search is: ~10^{40} cm^2 which corresponds to single event production with mass:

$$x = -\frac{1}{25.3} \ln\left(\frac{10^{-40}}{4.2 \times 10^{-35}}\right) = .5 \Rightarrow \boxed{3.5\ \mathrm{TeV}}$$

Search for Magnetic Monopoles at the Relativistic Heavy Ion Collider (RHIC)

Praveen Chaudhari *, Vasily Dzhordzhadze, Veljko Radeka, Margareta Rehak, Pavel Rehak, Sergio Rescia, Yannis Semertzidis, John Sondericker, and Peter Thieberger

BNL
PAC Meeting
September 12, 2006

* Spokesperson

[http://www.bnl.gov/npp/docs/pac0906/chaudhari_Monopole-RHIC-PAC.pdf]

Monopole Detector Setup

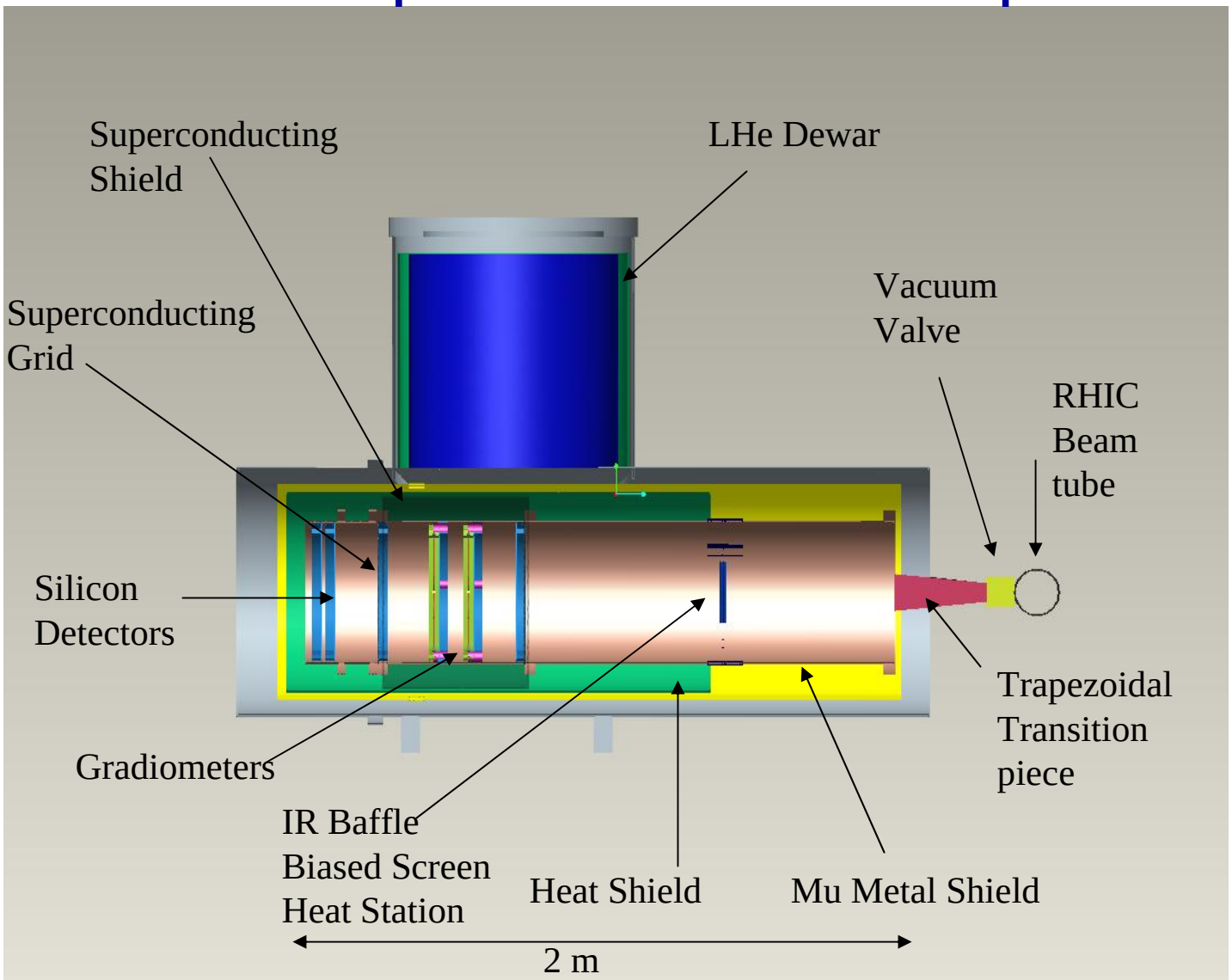

Drell-Yan Process for MMs at RHIC and LHC

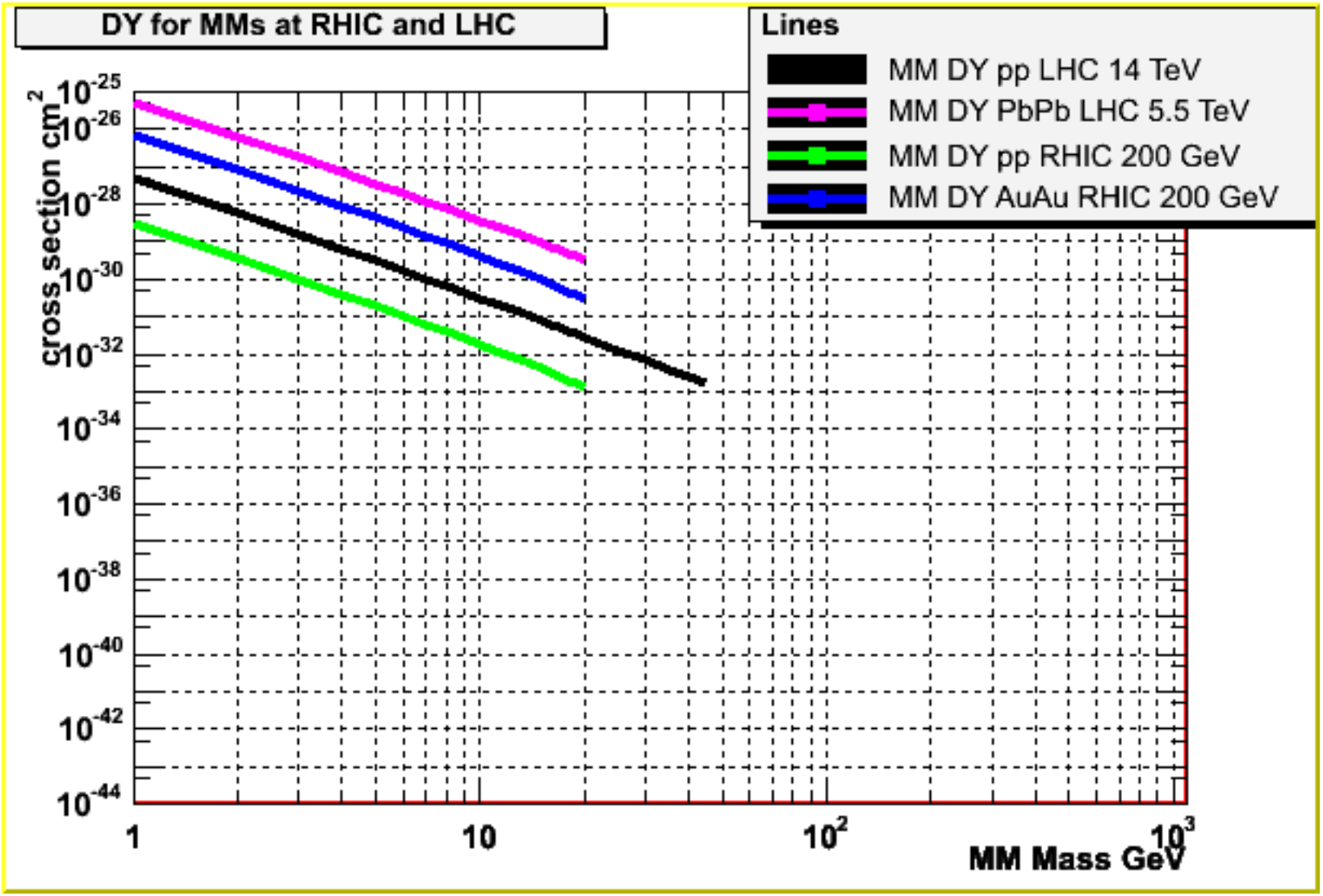

Expected Cross Section Limits for RHIC and LHC

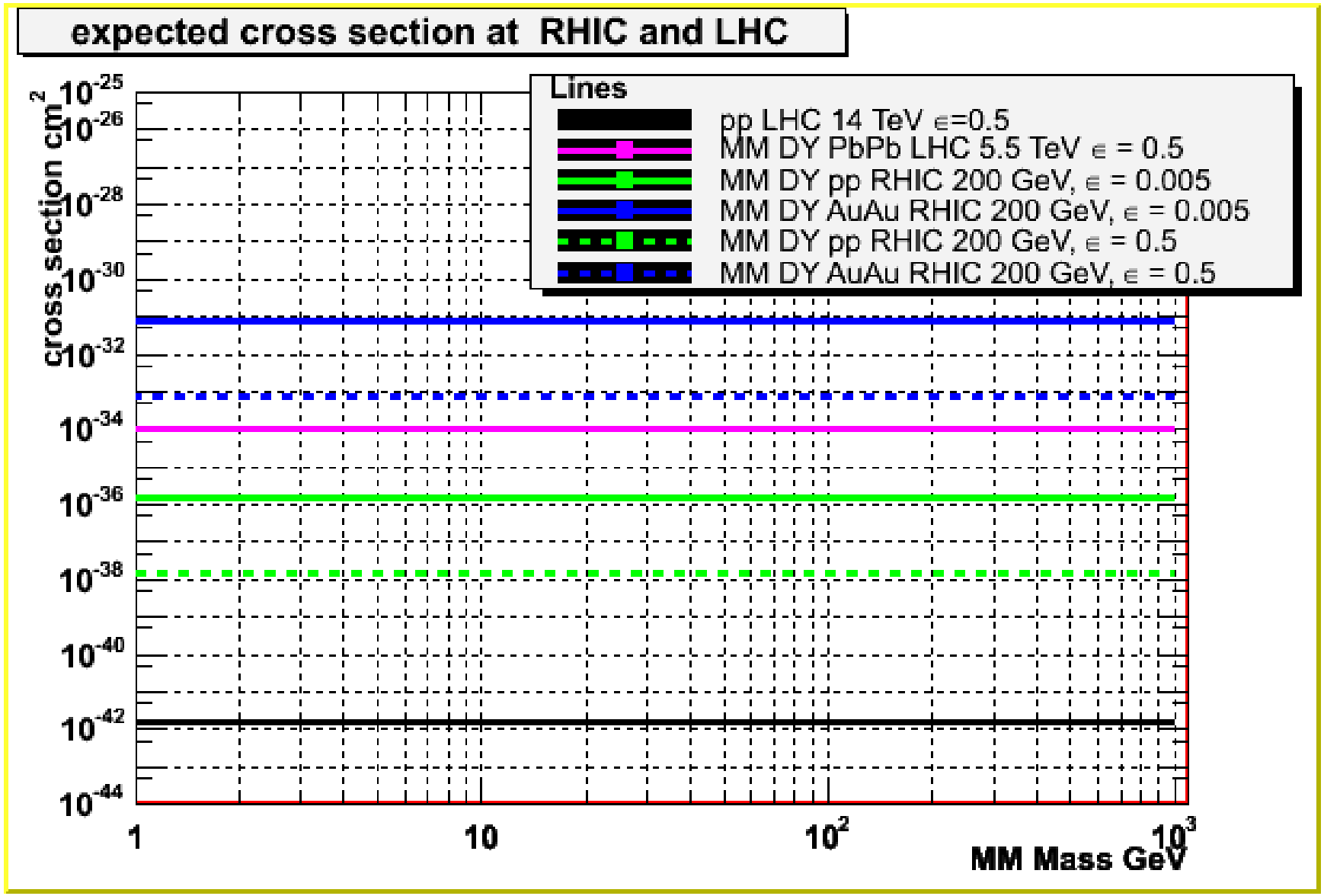

Drell-Yan Process and expected cross section for MMs at RHIC and LHC

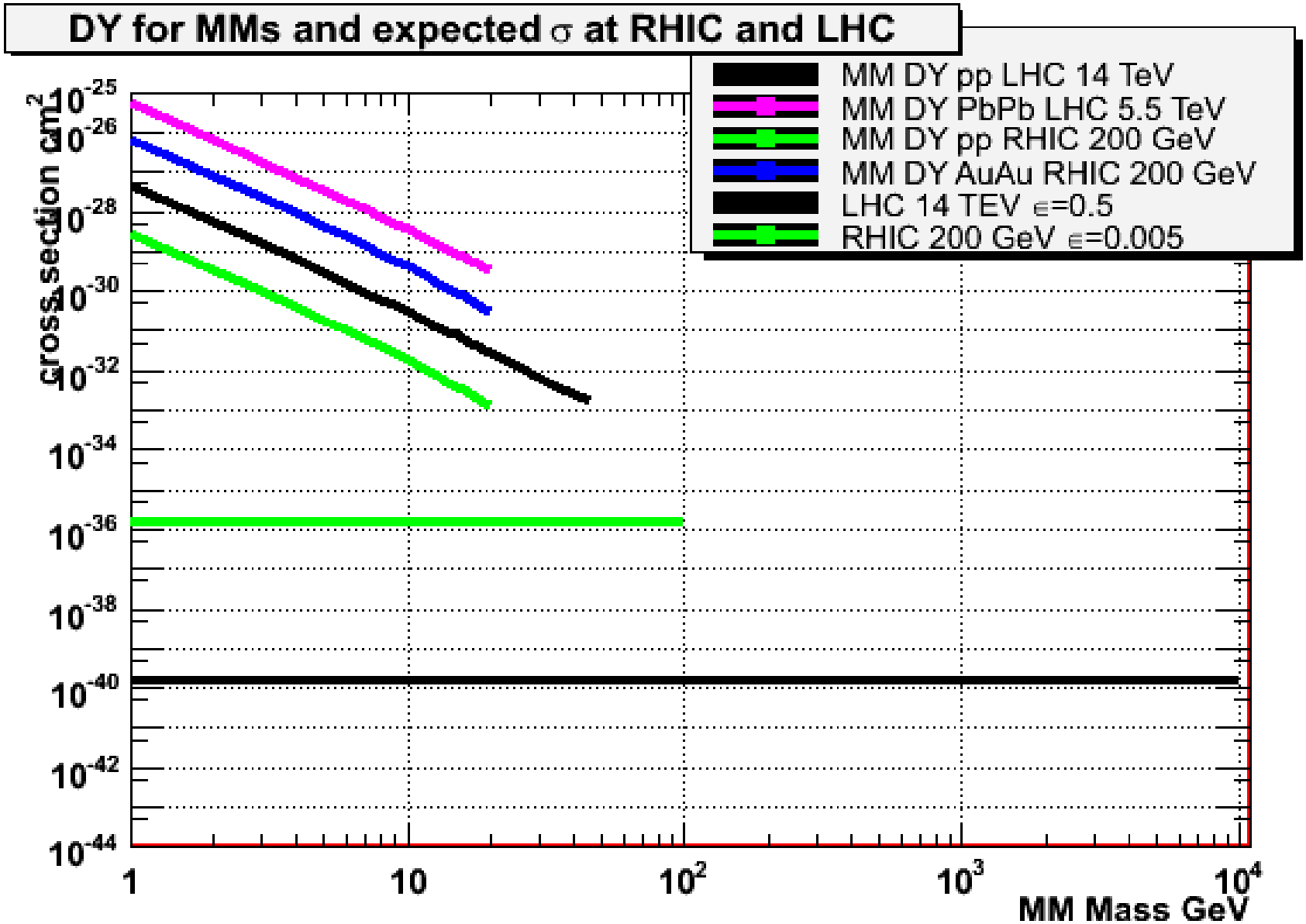

MMs cross section in AuAu ($\gamma\gamma$) at RHIC

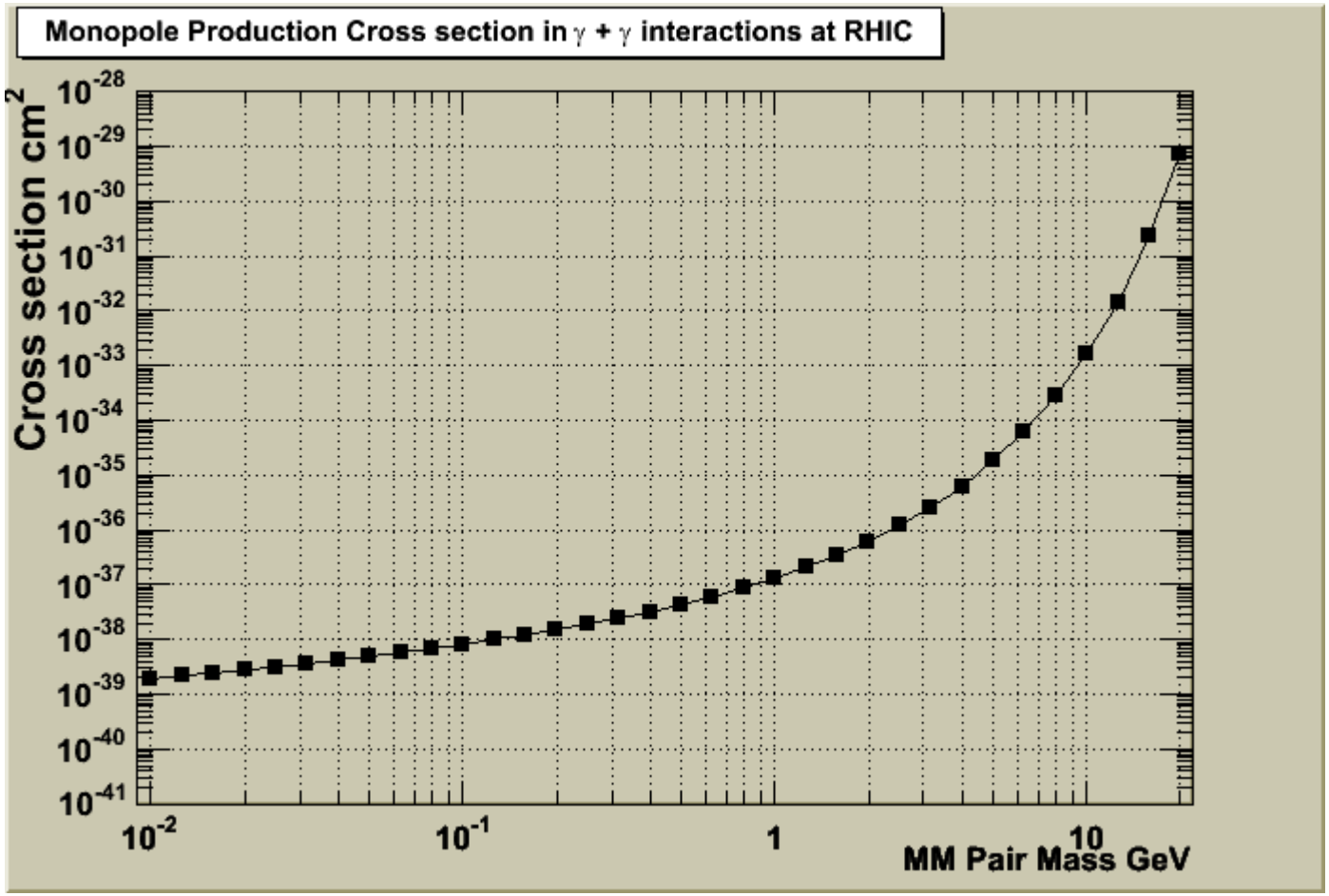

Summary and Conclusions

- Magnetic Monopole search in accelerator based experiments are reviewed
- MM characteristics and detection methods are presented
- Indirect search experiments overview shows that this type of search is based on an assumptions which is currently difficult to prove and obtained results are questionable
- Direct search experiments assumes MM interaction with a matter similar to usual charged particles, but MM energy losses are very large and distinguishable from usual particles
- The direct search experiments which reached lowest cross section limit are 1.0×10^{-38} cm^2 (PETRA) and 1.0×10^{-37} cm^2 (LEP) with mass limits 29 and 17 GeV/c^2 respectively. Higher mass limits reached at FNAL experiments but lower cross section

Summary and Conclusions (continued)

- Proposed experiment at RHIC assuming Drell-Yan mechanism of the Magnetic Monopole production can cover up to 50 or 65 GeV in mass with a cross section limit of 1.5×10^{-36} cm^2 (ε=0.005) or 1.5×10^{-38} cm^2 (ε=0.5)
- For AuAu case mass coverage is 15 or 50 GeV with a cross section limit of 0.75×10^{-31}cm^2 (ε=0.005) or 0.75×10^{-33} cm^2 (ε=0.5)
- RHIC $L_{pp}=2\times10^{32}$ and $L_{AuAu}=8\times10^{26}$ cm^{2}s^{-1} and running 10^7 s.
- RHIC experiment can reach $\sigma=1.5\times10^{-38}$cm^2 in AuAu interactions assuming Z4 rise of the cross section in peripheral AuAu ($\gamma\gamma$) interactions up to 3 GeV MM mass.
- LHC experiment with pp interaction with 0.5 acceptance can see 1 event at 1.0×10^{-40}cm^2 with a mass of 3.5 TeV assuming 10^7 s running time and LHC starting Luminosity $L=5\times10^{32}$ cm^{2}s^{-1}
- Proposed experiment is assumption free. It only assumes existence of the object with a magnetic charge and interaction with a SC loop.
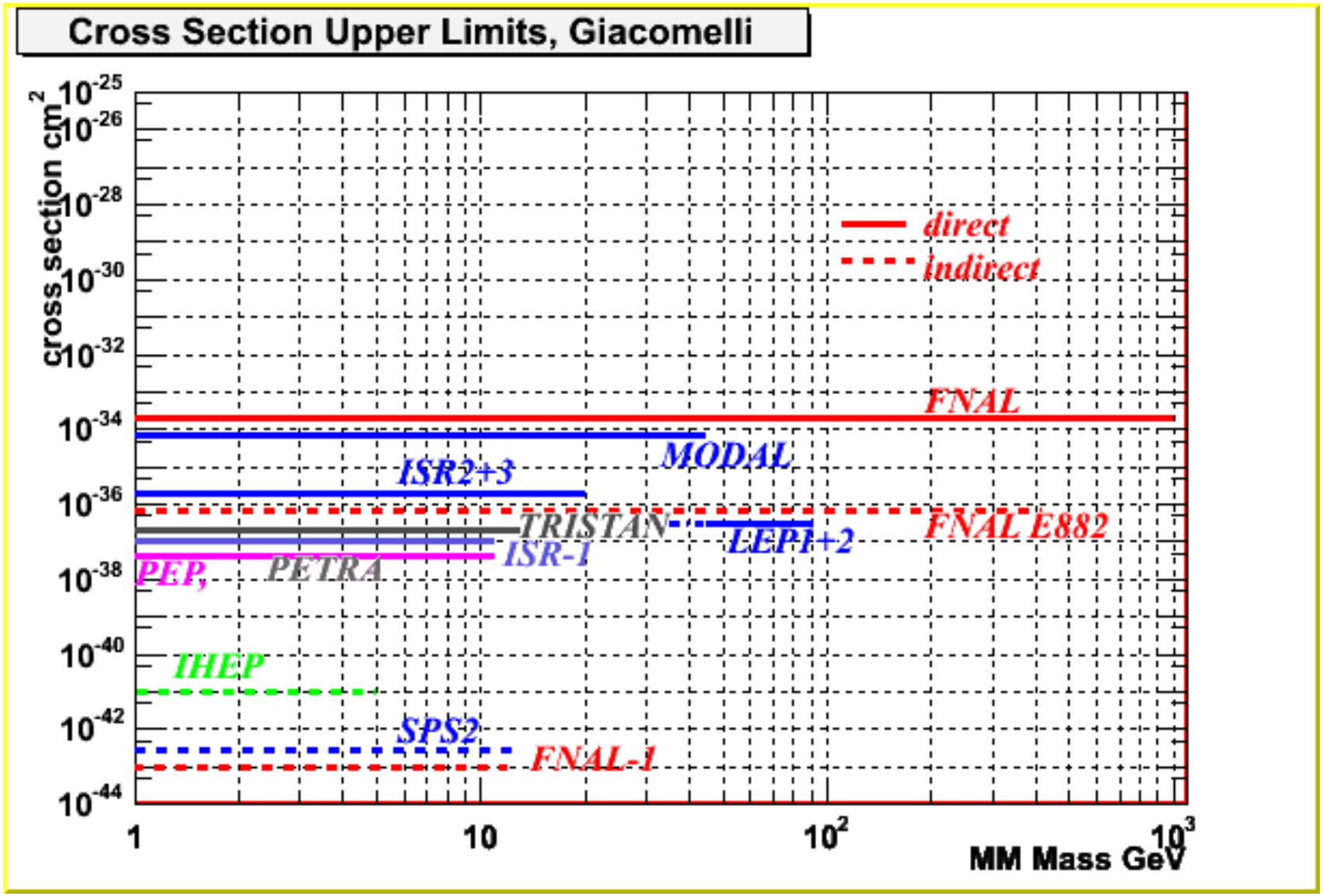
Measured Cross Section Limits vs MM Mass