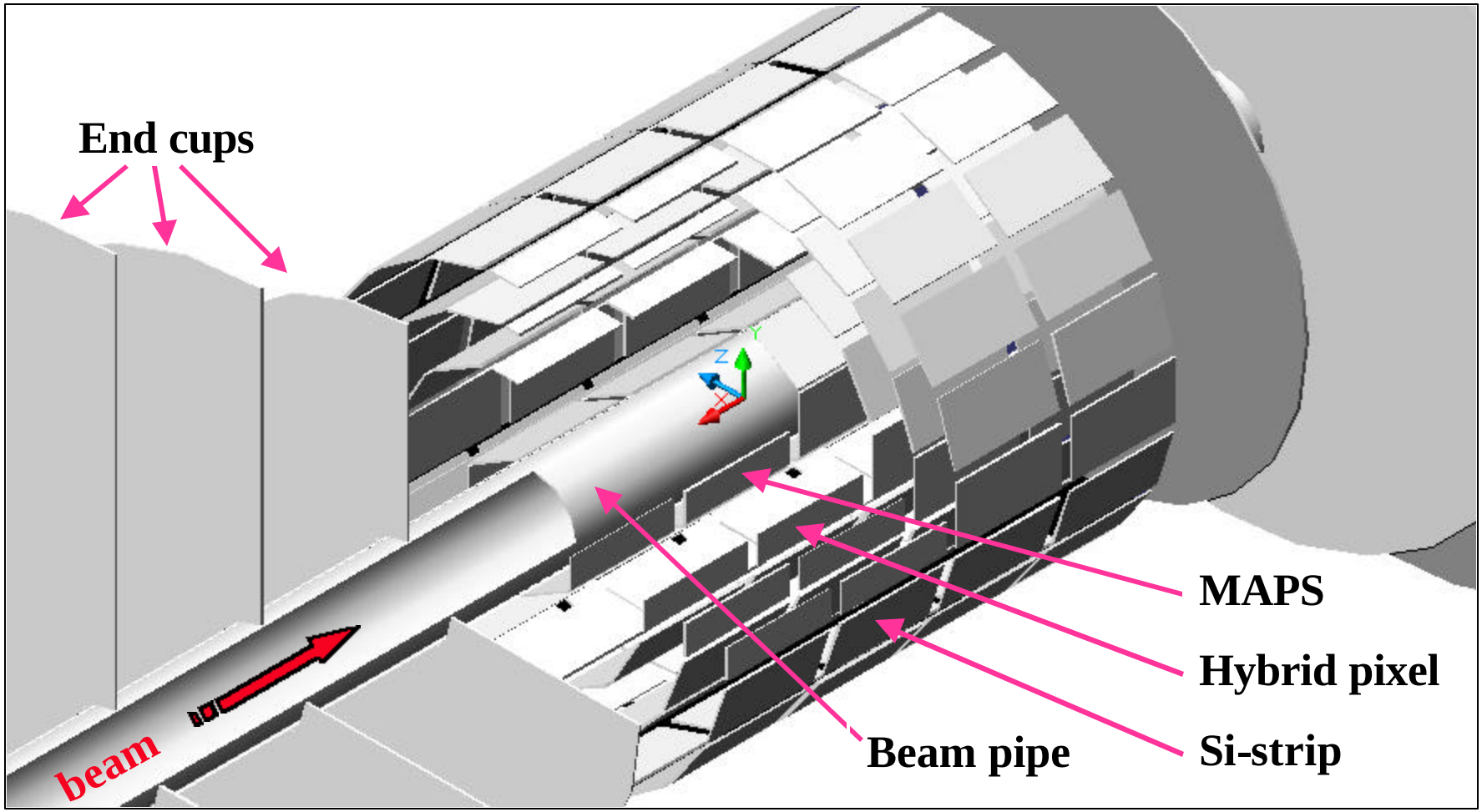Charm microvertex Si-barrel