TOF West in RUN6

Julia Velkovska (for the TOF.W team)

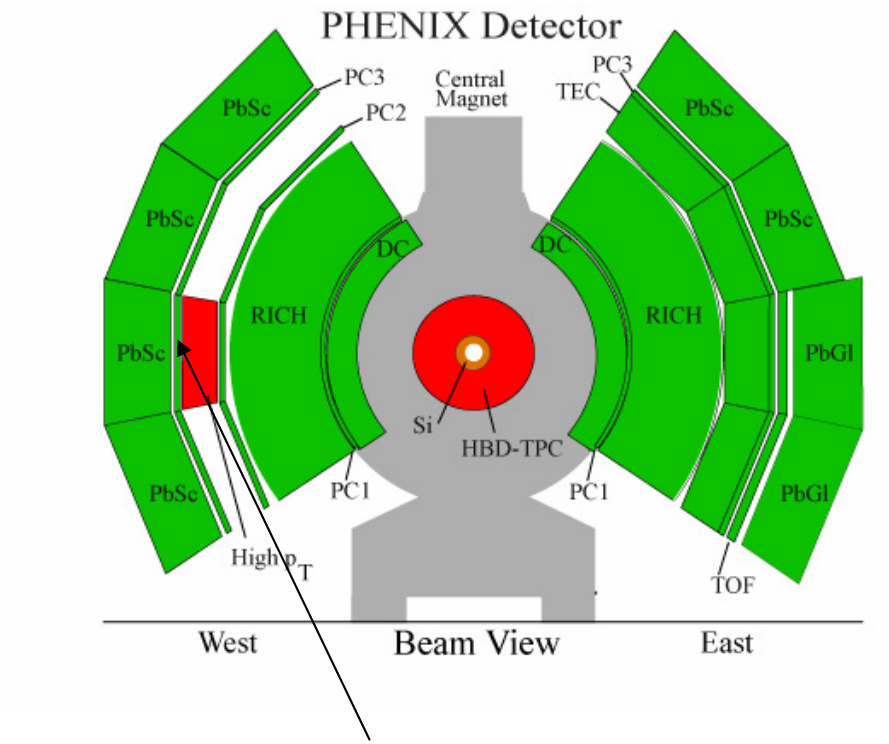

128 MRPC modules placed in 4 gas boxes go in Sector 1

PHENIX MRPC

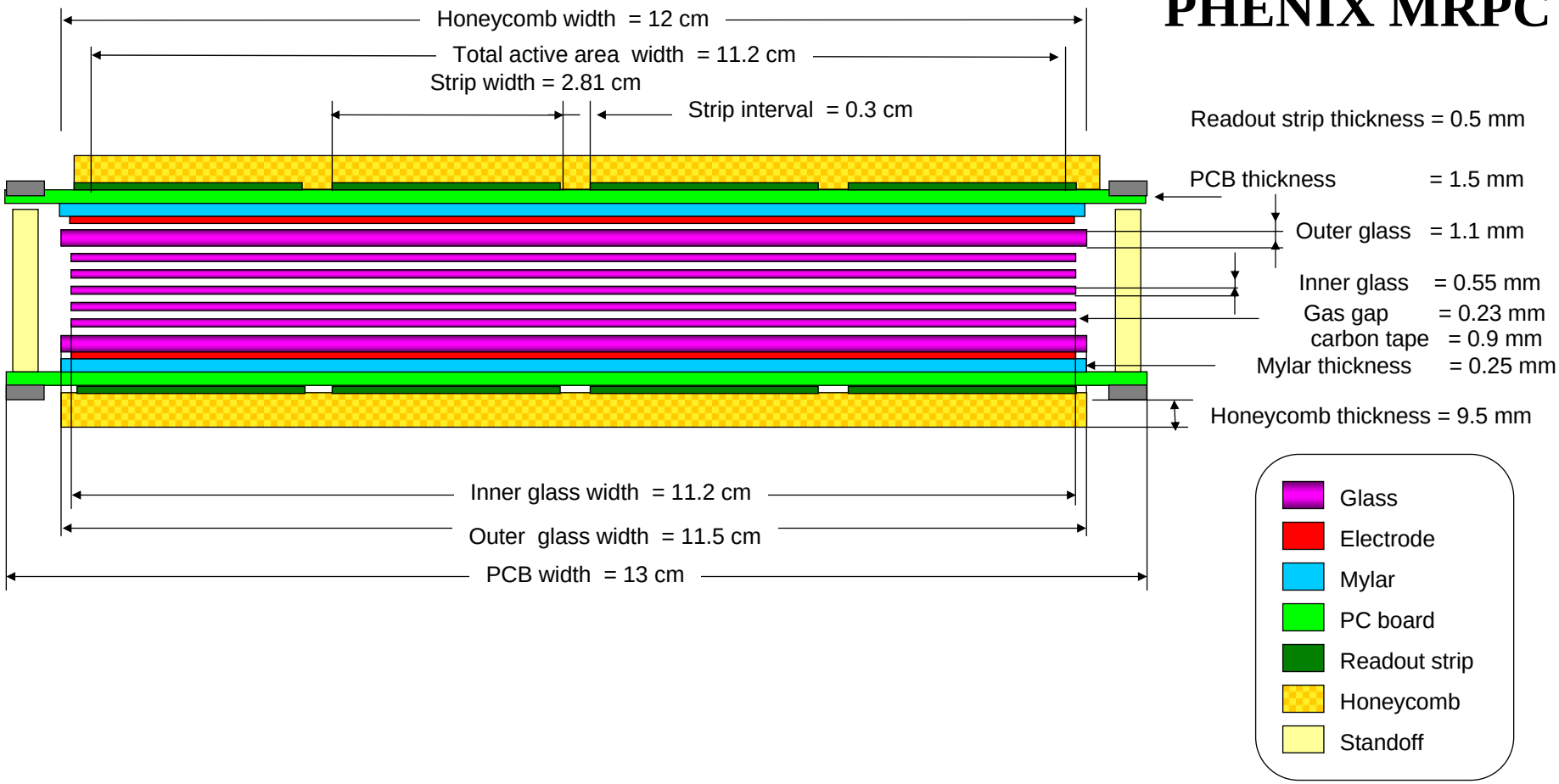
Honeycomb width = 12 cm
Total active area width = 11.2 cm
Strip width = 2.81 cm
Strip interval = 0.3 cm
Readout strip thickness = 0.5 mm
PCB thickness = 1.5 mm
Outer glass = 1.1 mm
Inner glass = 0.55 mm
Gas gap = 0.23 mm
carbon tape = 0.9 mm
Mylar thickness = 0.25 mm
Honeycomb thickness = 9.5 mm
Inner glass width = 11.2 cm
Outer glass width = 11.5 cm
PCB width = 13 cm
Glass
Electrode
Mylar
PC board
Readout strip
Honeycomb
Standoff

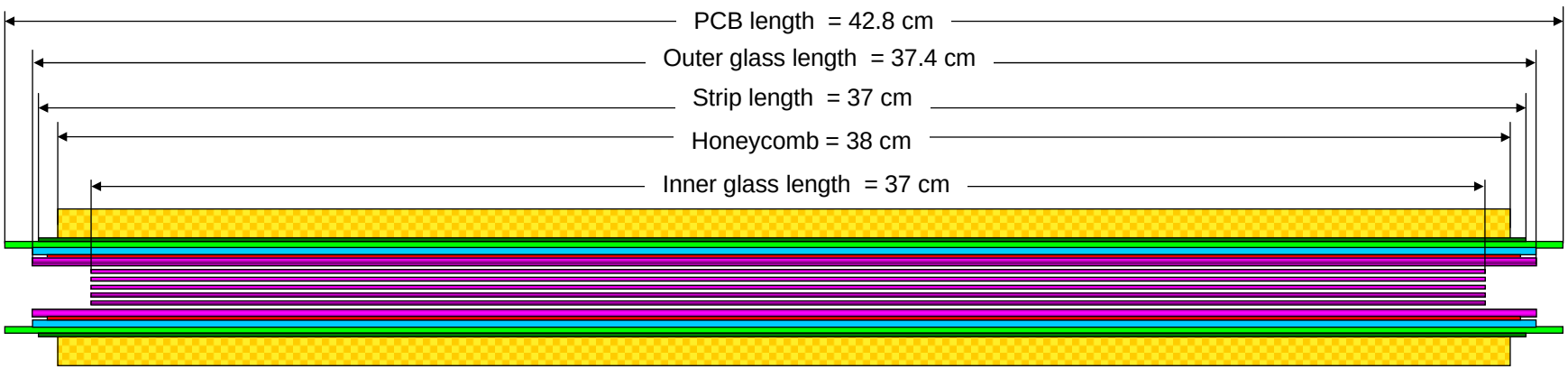
PCB length = 42.8 cm
Outer glass length = 37.4 cm
Strip length = 37 cm
Honeycomb = 38 cm
Inner glass length = 37 cm

Materials

- Float Glass
- Carbon tape
- Monofilament fishing line
- Nylon standoffs
- Mylar film
- phenolic impregnated Kraft Paper honeycomb
- HV wire Rowe Industries R790-1522
- Machine screws (ss) and washers
- Gas box: aluminum + FR4 feed through PCB

½ box with 16 MRPCs

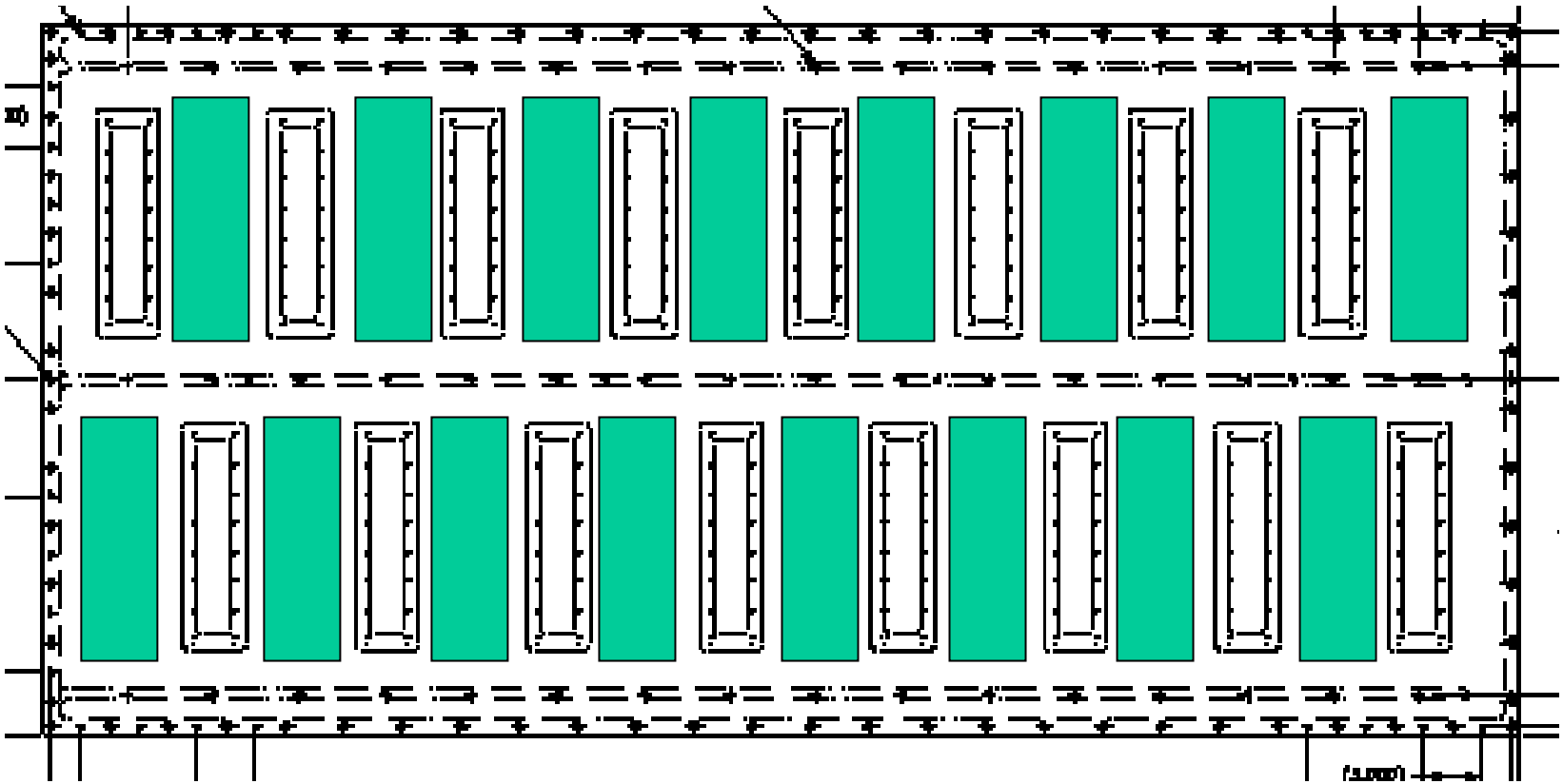

4 gas boxes, 32 MRPCs in each box; total 128 MRPCs
Each MRPC has its own F/T and pre-amp board (located next to it)

F/T and pre-amp location+grounding

PEM studs (16/board) connect electronics ground to Al box

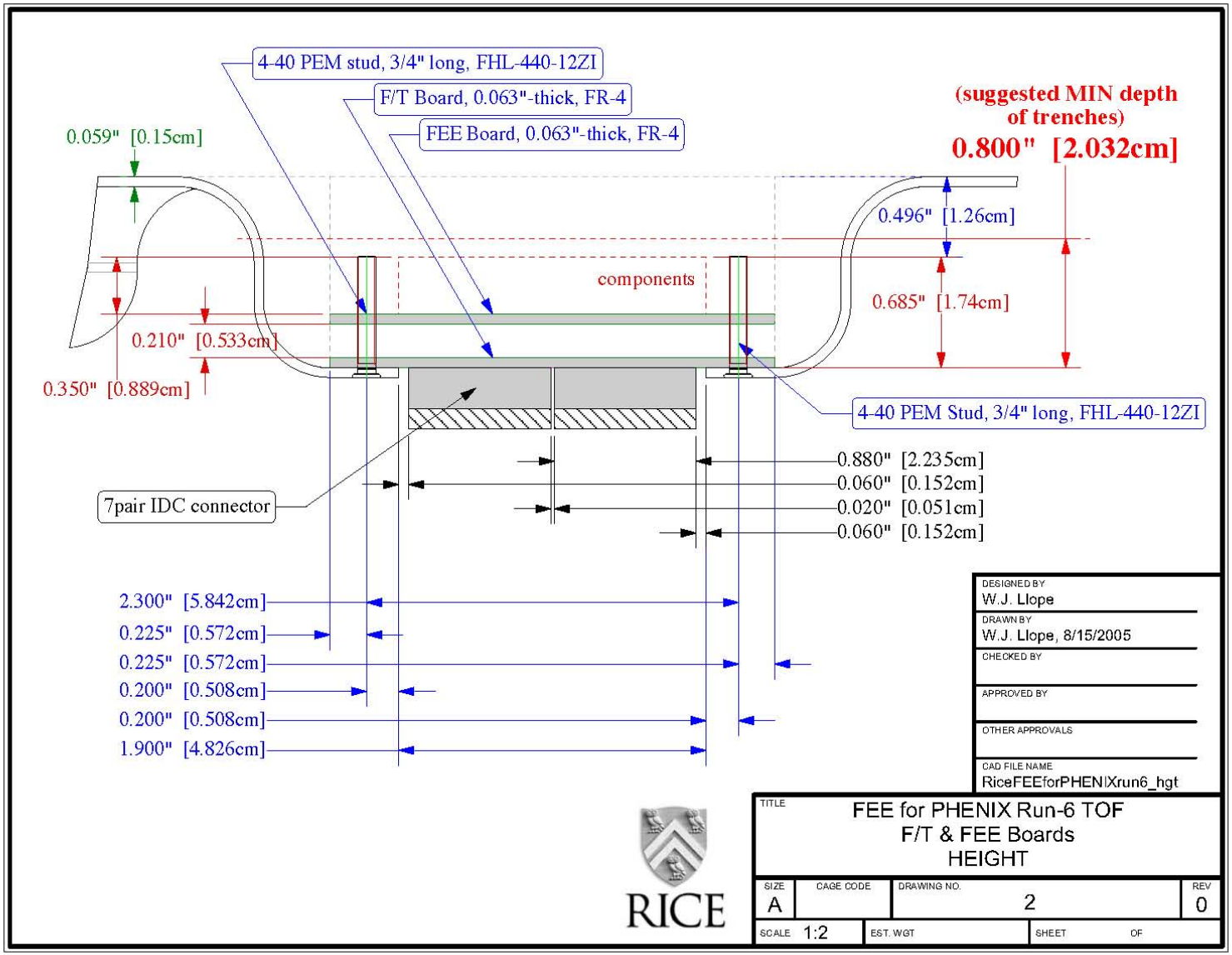

Pre-amp: 1 channel

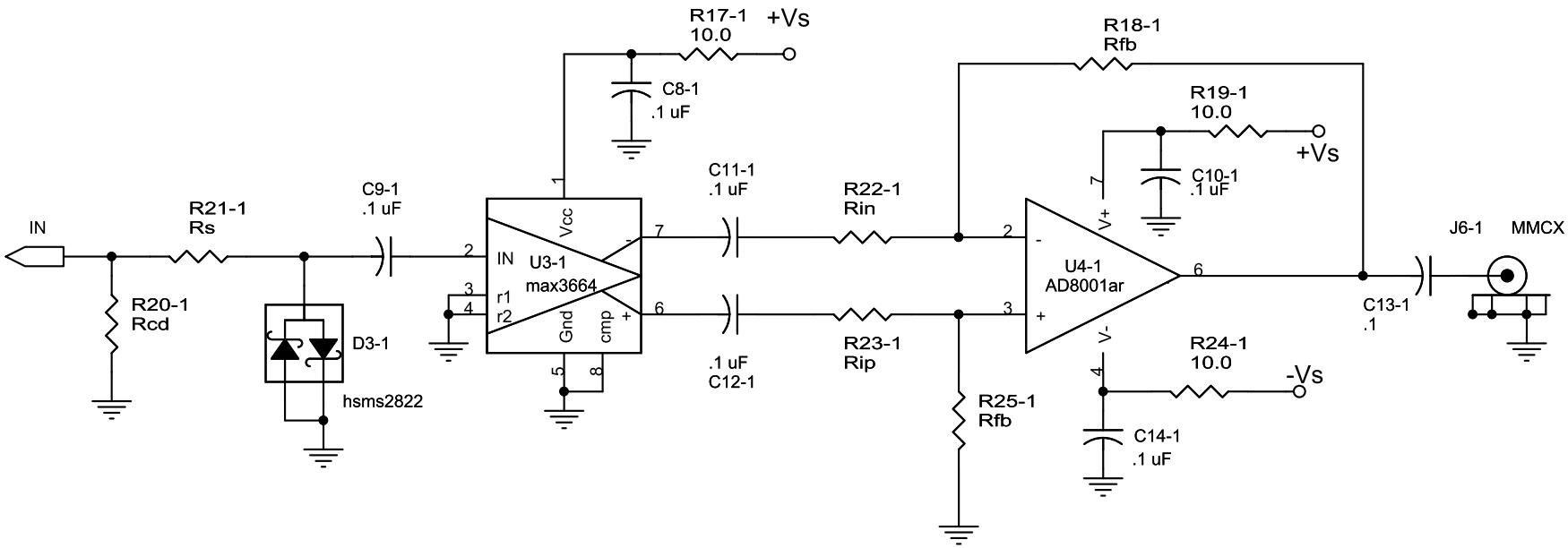

2 –stage amplification of analog signals

Signal cabling:

- Belden-e 84316 M17/113 RG316 with MMCX –LEMO
- Belden xxxx RG58 LEMO-LEMO

Pre-amp: 1 board (8 ch) 1.5 A fuses: +4.5V , -8.5 V supply

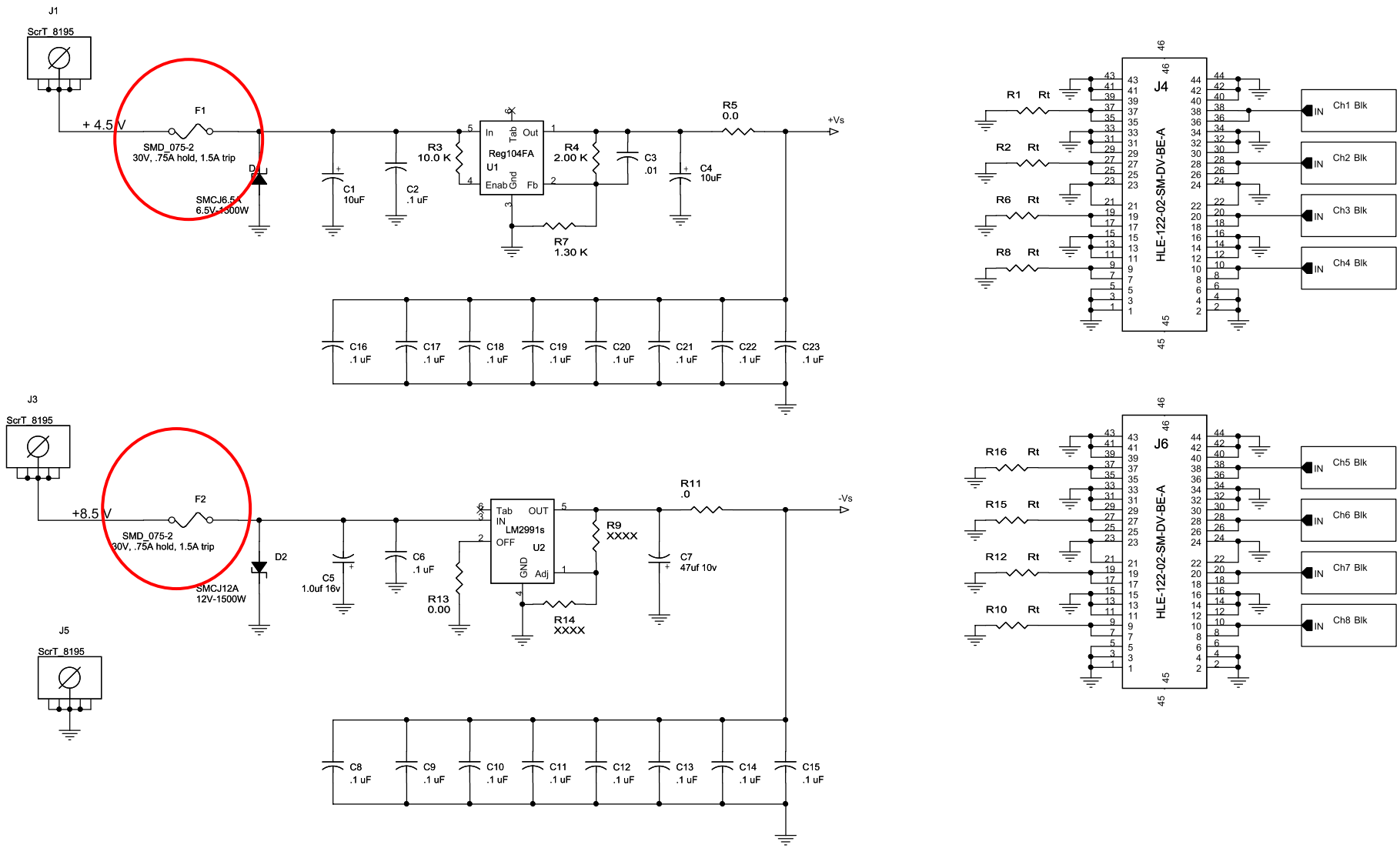

TOF.W Preamp Low Voltage Supply Cabling
(1/8 shown)

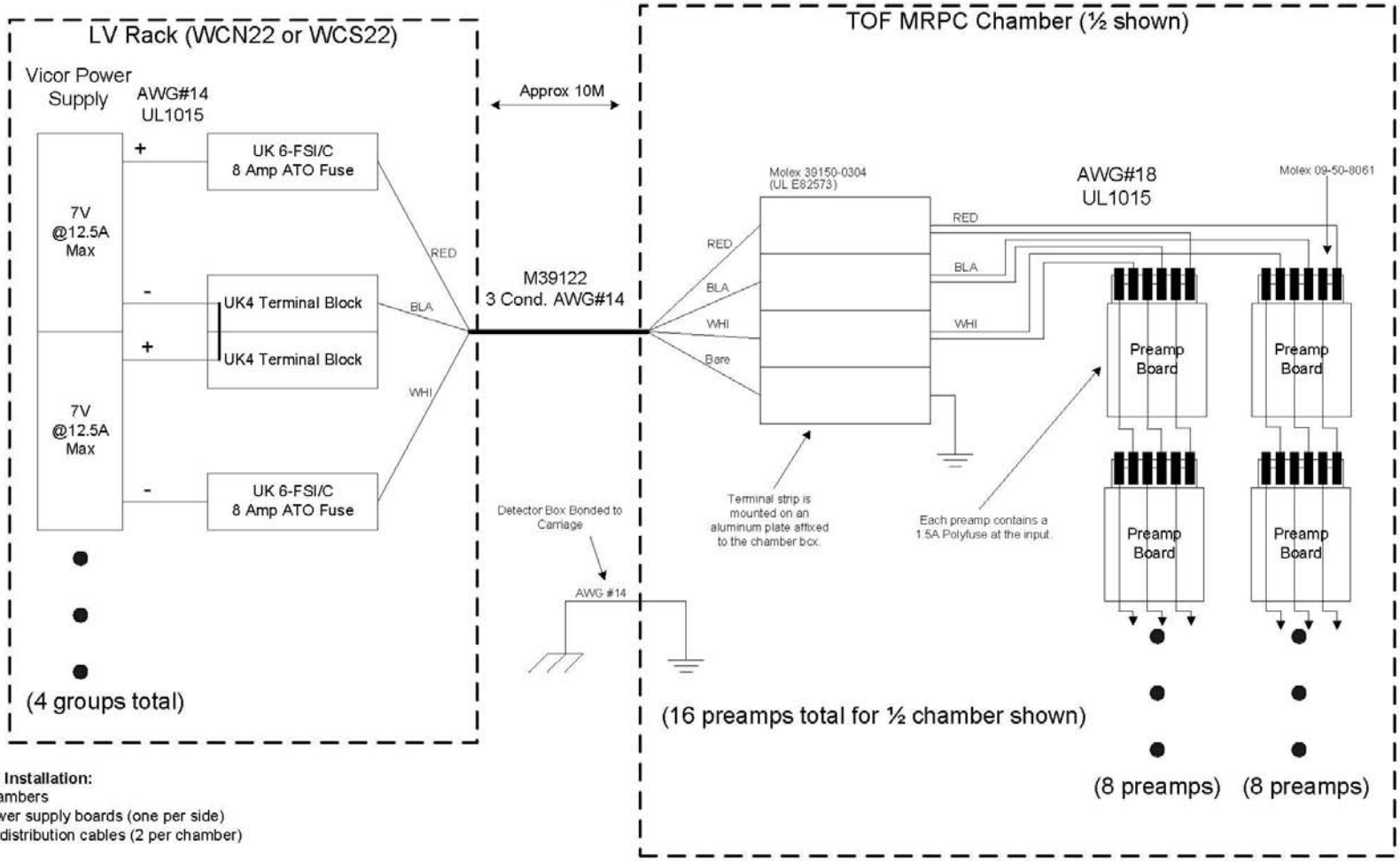

Total Installation:
4 Chambers
2 Power supply boards (one per side)
8 LV distribution cables (2 per chamber)

PHENIX

S.Boose 5/26/05

Need minor adjustment to the trim circuits to accommodate the new voltages: +4.5V ; -8.5 V

HV: CAEN SY127 mainframe + A631P and A631N modules

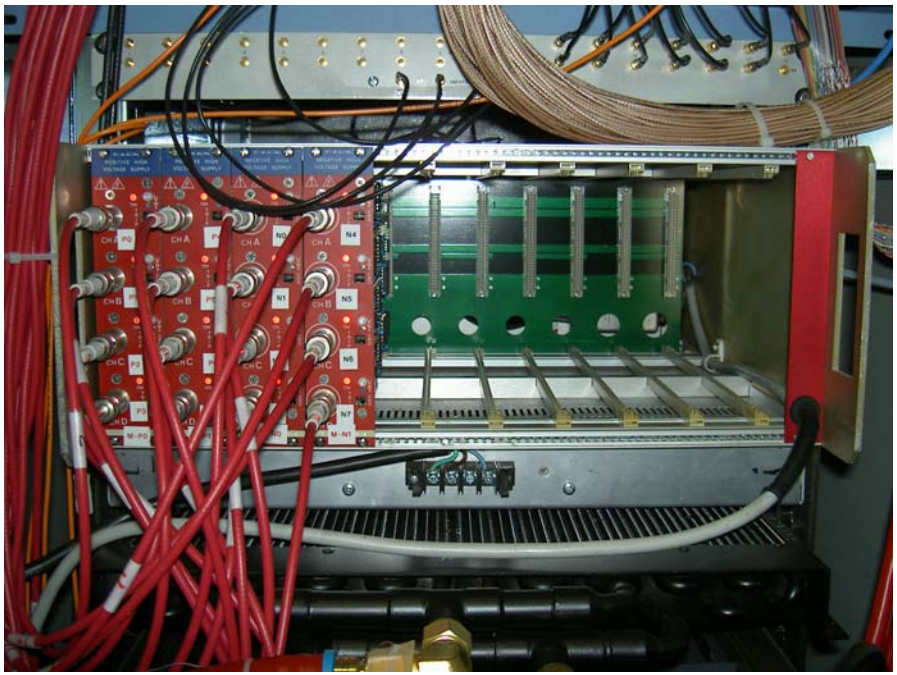

A631 Technical Specifications Table	
Vout full scale	**8 kV**
Iout full scale	**40 µA**
Voltage resolution	**2 V**
Current resolution	**10 nA**
Ramp up/down	**500 V/s**
Max ripple pp	**<80 mV**

Modules built with KINGS 1064-1 connectors (10 kV rated)
2 mainframes (North/South) with 4 modules each

HV cabling

- Internal HV bus: 8 MRPC chambers attached
  - ROWE R790-1522 wire
  - Silicon fusion tape at junction
  - ~20nA/detector
- KINGS 1064 connector on Al box (each half box has 2 + and 2 – HV buses)
- In RUN5 we used HV cable Reynolds 167-2669, but we found that it doesn't have appropriate fire rating
- Will be replaced with:
  - Special Cable Prev 3864L P/N CPE 01-001 : 20 kV rated

A small scale fire test was conducted on 6 bound cables, 12 inches long. The cables were mounted vertically and exposed to a butane flame for 60 seconds. No flame contribution was noted and the char pattern did not extend beyond the original area of flame exposure. This material appear to meet the VW-1 criteria.

Gas: we want to add a small amount (5% or less: SF6)

- Benefits of SF6
  - Quenches streamers:
    - streamers have ~30ps worse timing resolution
    - Detector deadtime increases, efficiency suffers, may have long term effect on MRPC
    - Rate of streamers increases in beam conditions compared to the test bench (up to 40% at 15kV in Run5, compared to 20% with cosmic rays)
  - Reduces noise rates
- The SF6 flow rate would be <40 ccm . If we leak it all – that's 1 liter for 24h. We can seal the box with Dow Corning 730 solvent resistant silicone to the sensitivity of our freon leak detector (< 0.5 l/year)
- Shortcomings of SF6:
  - ODH hazard

r134a , specific gravity = 3.25

iC4H10, specific gravity = 2.01

SF6 , specific gravity = 5.114

LV, Signals from RUN5

- LV : “K” supply capable of +6.5V @ 46A (300W) and -6.5V @ 69A (450W). Reside in WCS22 along with the Aerogel supply.
- We need to power 30 boards - one supply is enough
- 0.37A*15 = 5.55A @ 6.5V
- Cabling: 18AWG teflon, 3 conductors,grnd,+6.5V,-6.5V
  - 2 cables to get to box, then daisy chain
  - Fuses + input protection
- Signal cables: RG316 with MMCX & Lemo (short), then go to thicker cable RG58 lemo to connect to FEMs