Muon Tracker System

John Halliwell

FEE Review Meeting at BNL

November 22, 1996

System Specifications - General

- Channel Matching Better Than 1% (after calibration)
- System dynamic range > 11 bits
- < 200mW per channel dissipation
- Day 1 - 91 DCMs
  Upgrade- 182 DCMs
- ~ 32800 channels total per arm:
  * 17000 high res cathodes
  * 8250 low res cathodes
  * 7550 anodes
- Gas Drift Time of 50ns

System Specs- High Res Cathodes

- 500ns shaping time (<= 12us decay time)
- strip capacitance 10 to 150pF
- < 50mW per chan
- most probable input charge of 80fC; pos. polarity
- noise less than 0.8fC
- calibration caps in pre-amp
- cal even/odd chan mask
- dynamic range > 11 bits
- 96 channels per FEM
- 3 or more AMU samples per event

PHENIX

System Specs - Low Res Cathodes

- strip / signal specs same as high res cathodes
- uses high res pre-amp ASIC
- discriminator output
- one 1 bit sample per event
- compatible with LUND DMU

System Specs: Anode Wires

- most probable input charge of 800fC; neg. polarity
- one 1 bit sample per event
- pre-amp with discriminator output
- compatible with LUND DMU
- discriminator threshold precision sufficient to resolve event

PHENIX

Staffing of Muon Tracker FEE

- Responsible Physicist at ORNL - Ken Read
- ORNL I&C Engineers
  - System - John Halliwell
  - FEM/FEE digital - Mark Musrock
- LANL System Contacts (system issues):
  - General - Wayne Kinnison
  - Mechanical/FEE - Walt Sondheim and Dave Lee

PHENIX

Station 1 Quad Dimensions

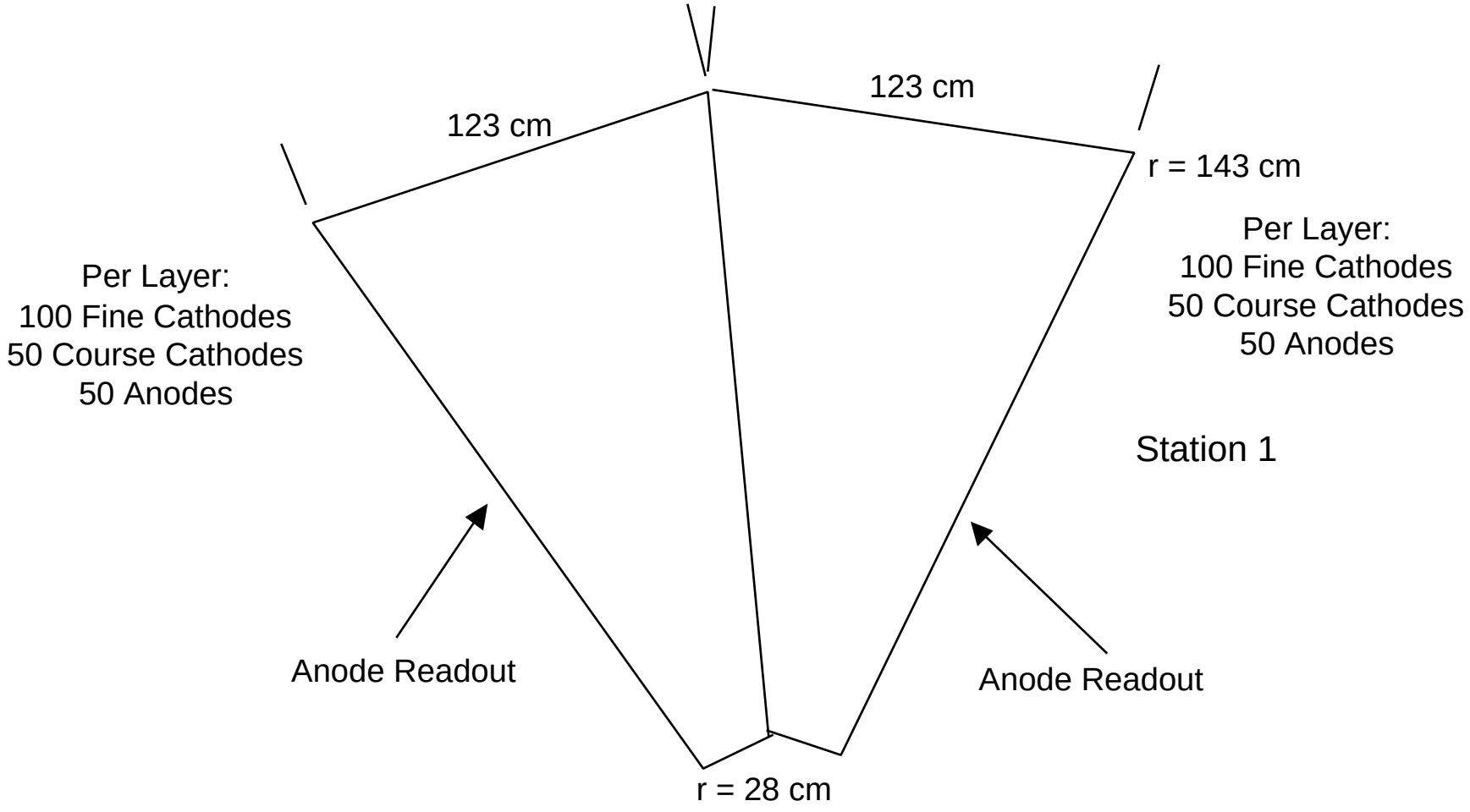

Station 2 and 3 Octant Dimesions

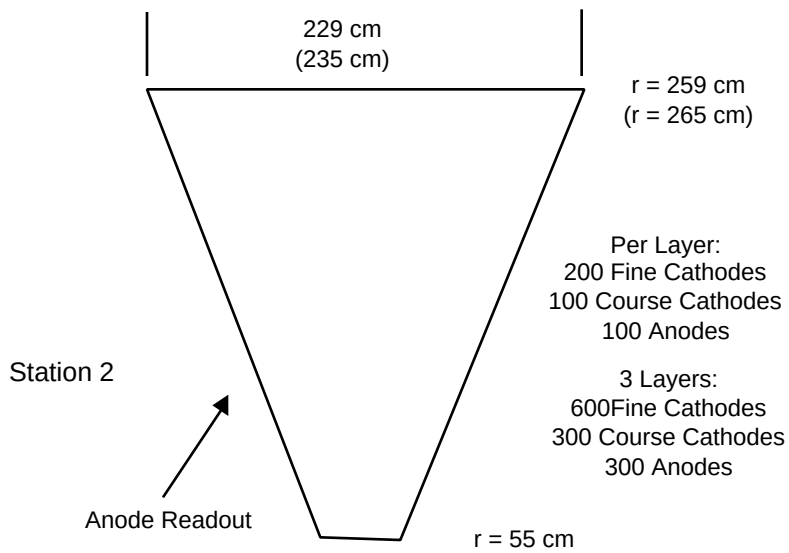

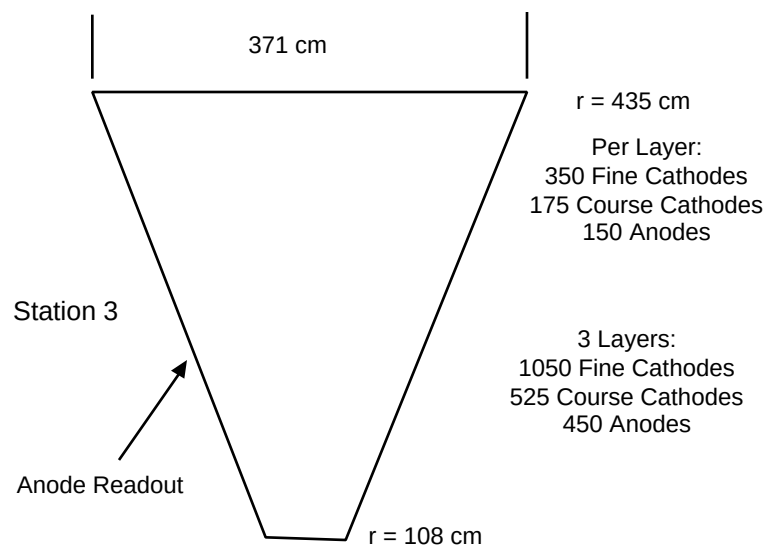

MuTR layout (side)

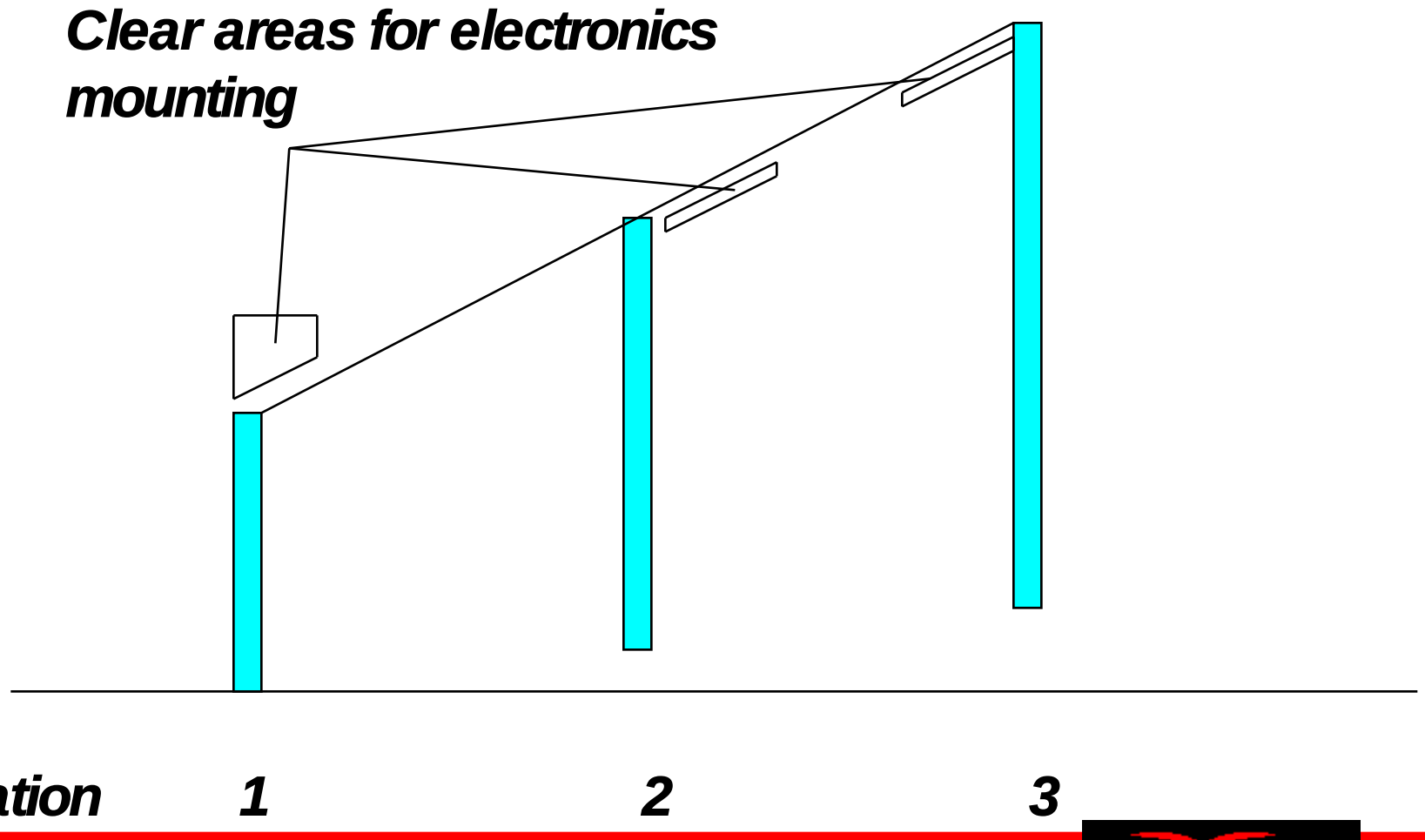

MuTR lines of site sketch (station 2)

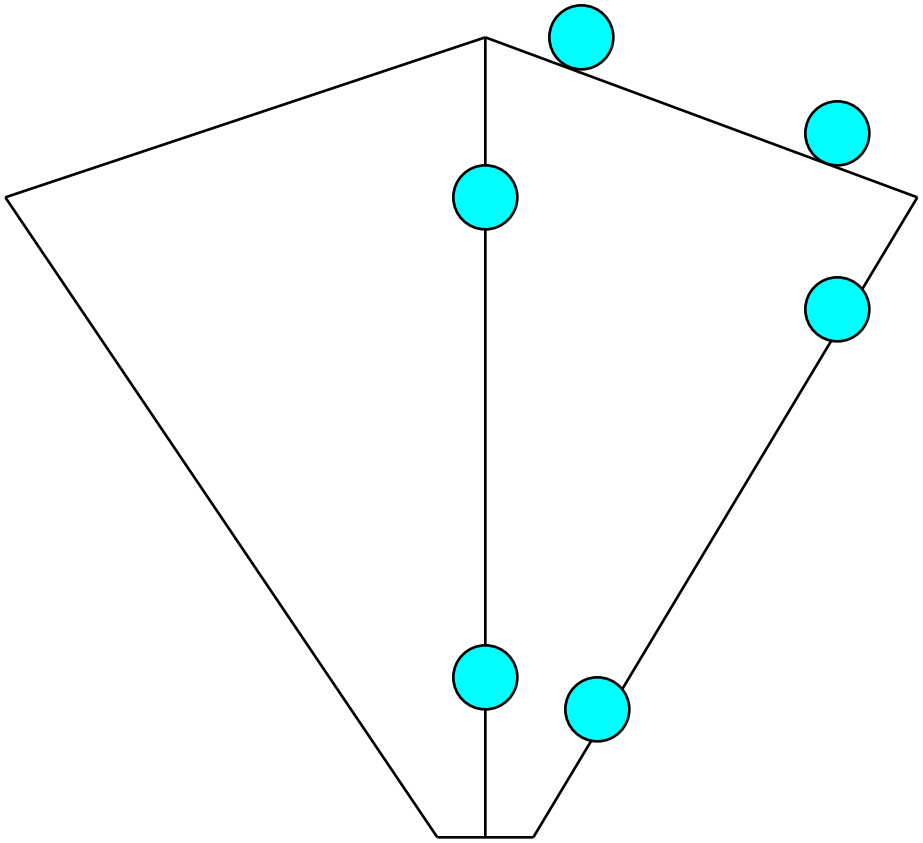

Basic System Layout

Best Fit, Channels blocked in groups of 16
1 FEM per set of 6 high res cathode connectors

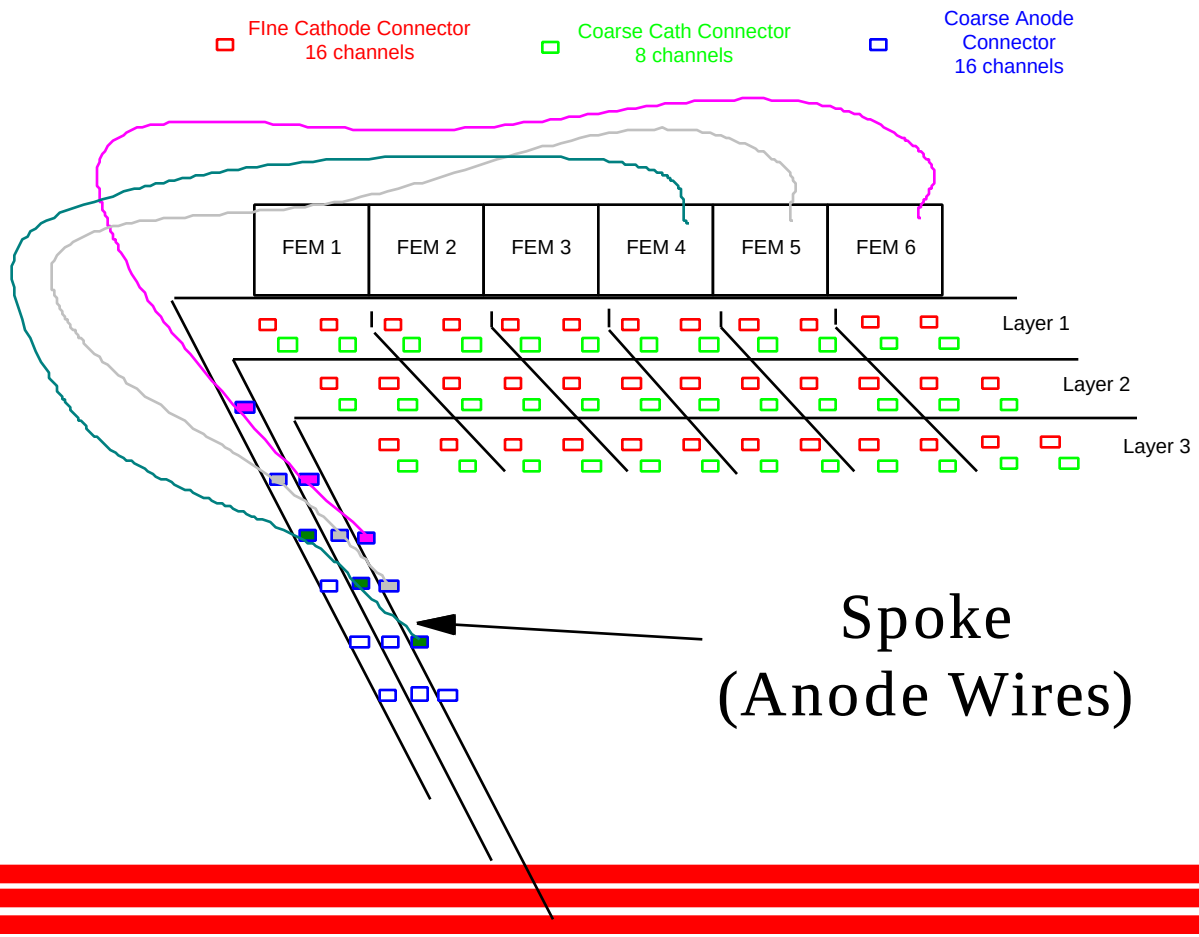

Muon Tracker Channel Counts

North Arm (South similar, but smaller)

Station 1

2880 HR cath 1440 LR cath 1350 A	5670 chan	4 FEMs / octant 32 total FEMs 16 fibers to DCMs

Station 2

Station 2; 5280 HR cath; 2640 LR cath; 2400 A	10320 chan	7 FEMs / octant 56 total FEMs 28 fibers to DCMs

Station 3

Station 3; 8880 HR cath; 4400 LR cath; 3800 A	17120 chan	12 FEMs / octant 96 total FEMs 48 fibers to DCMs

FEM Structure

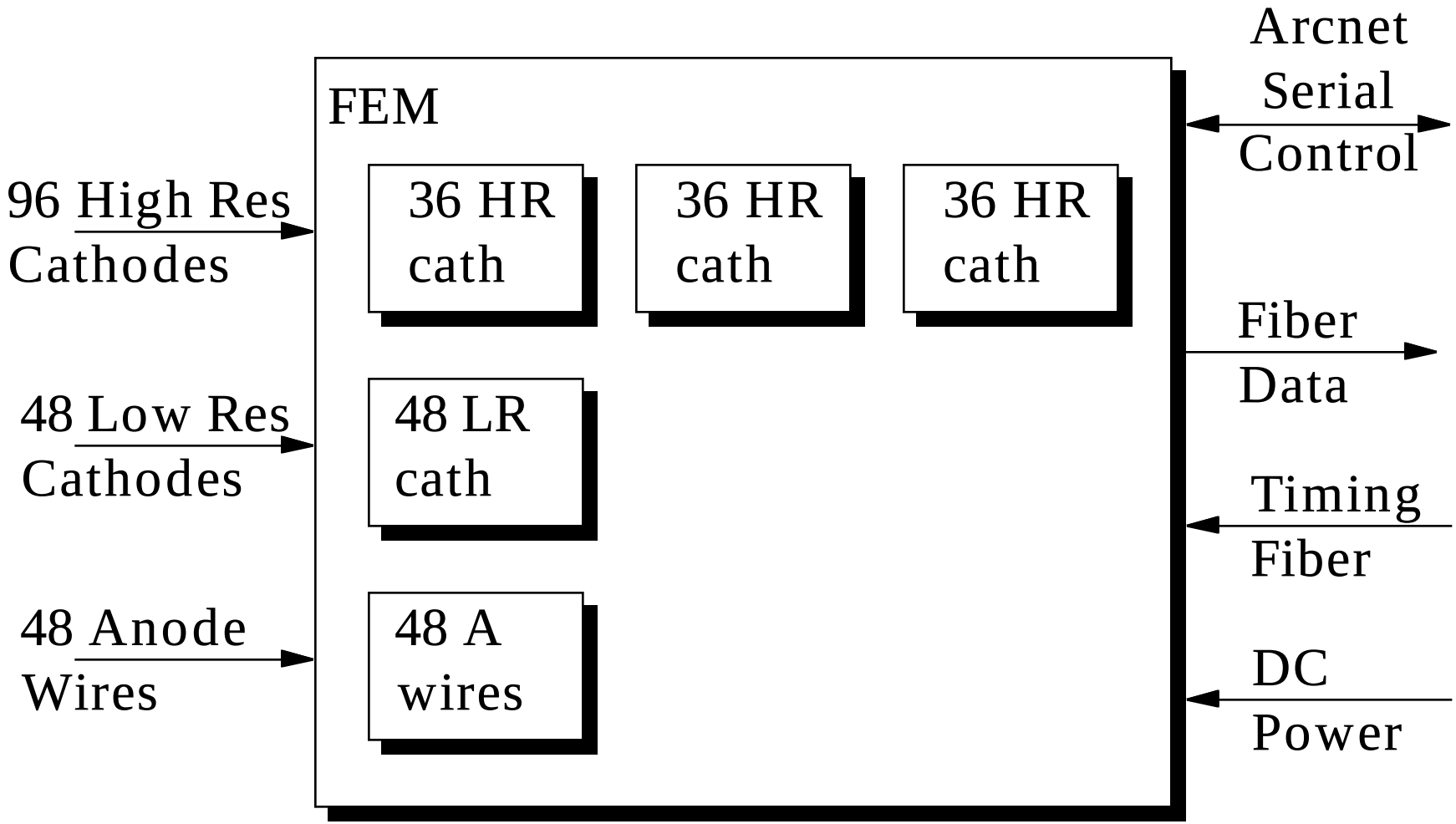

FEE Detailed Structure (a)

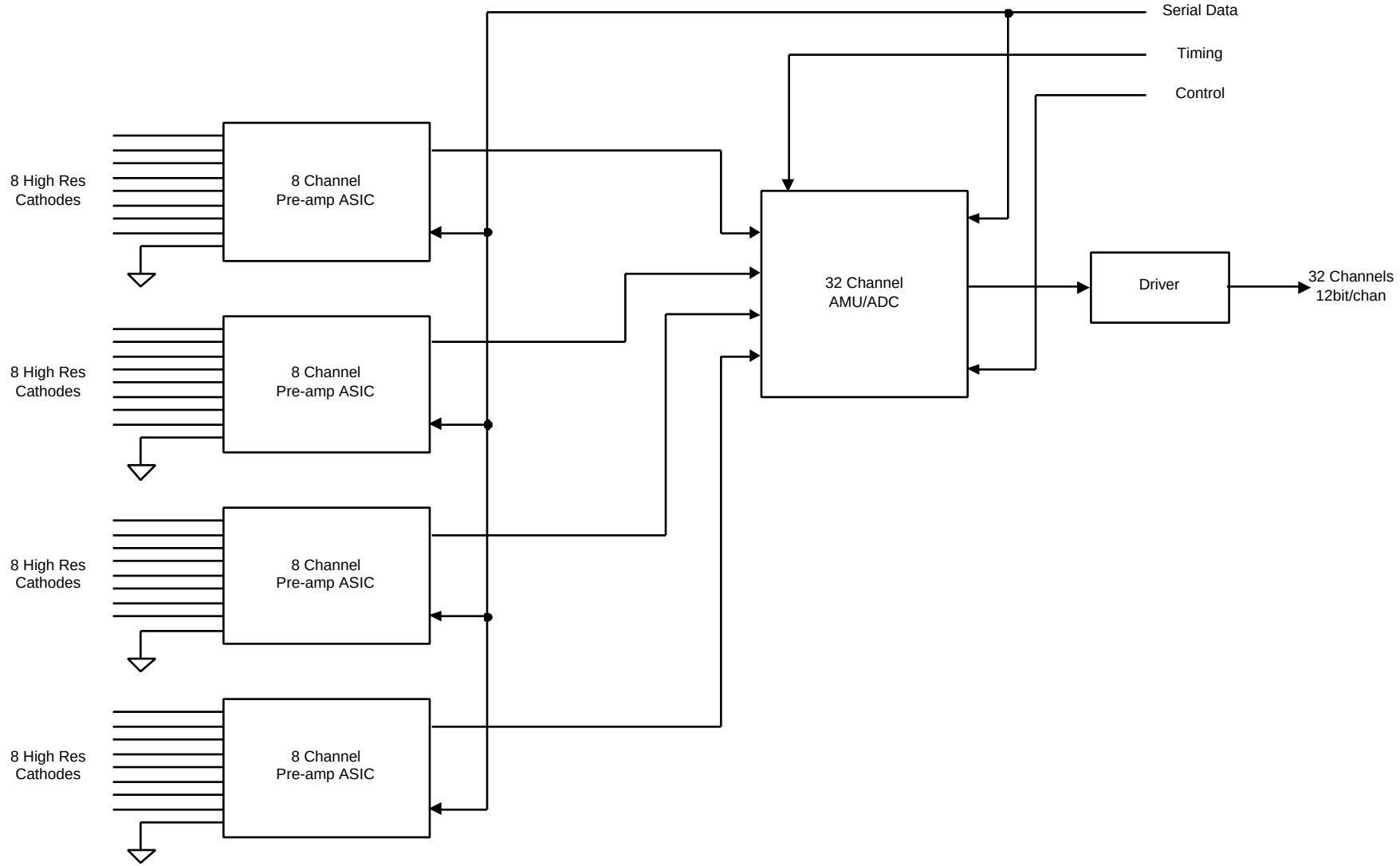

FEE Detailed Stucture (b)

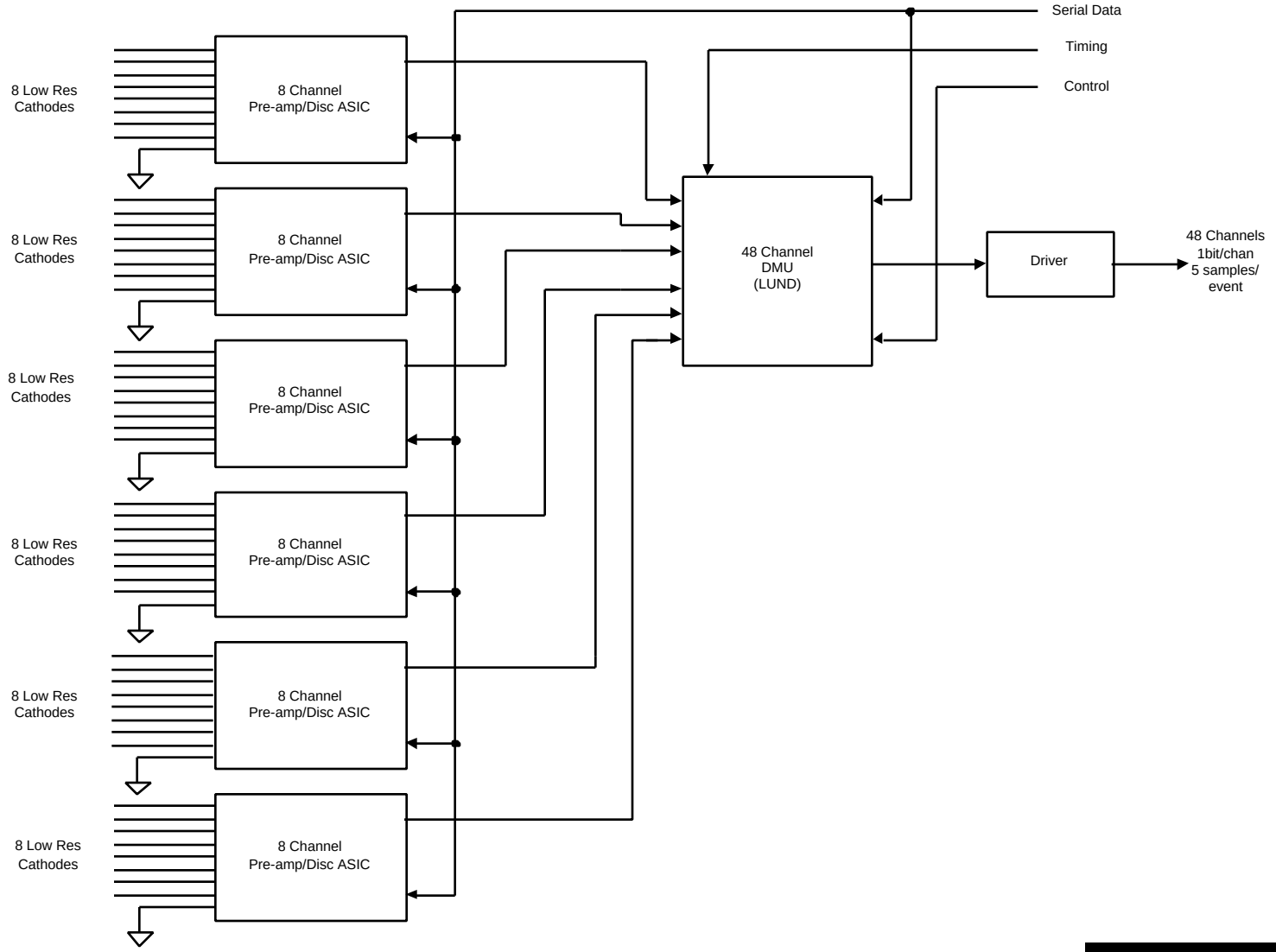

FEE Detailed Structure (c)

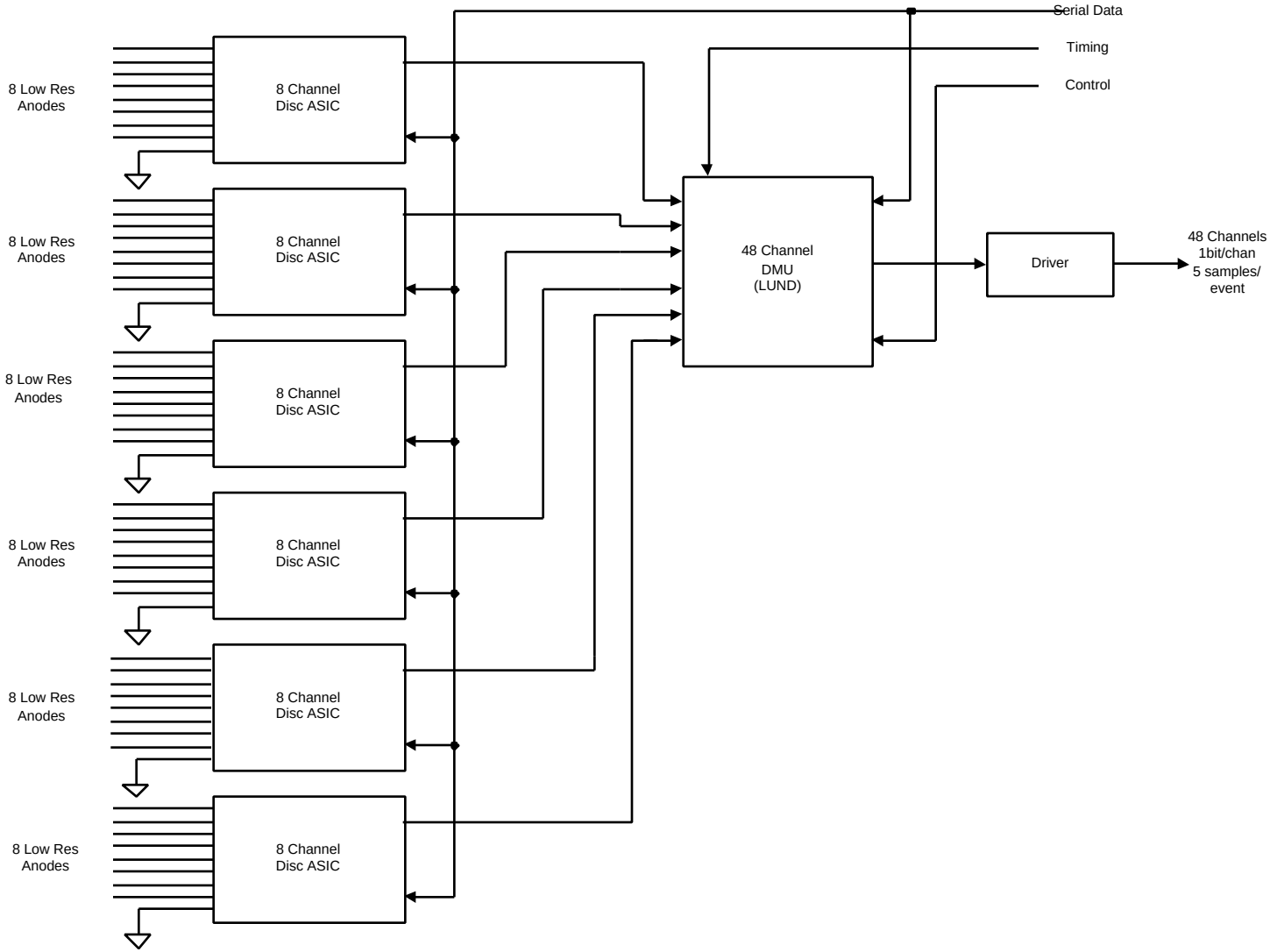

Grounding/Power

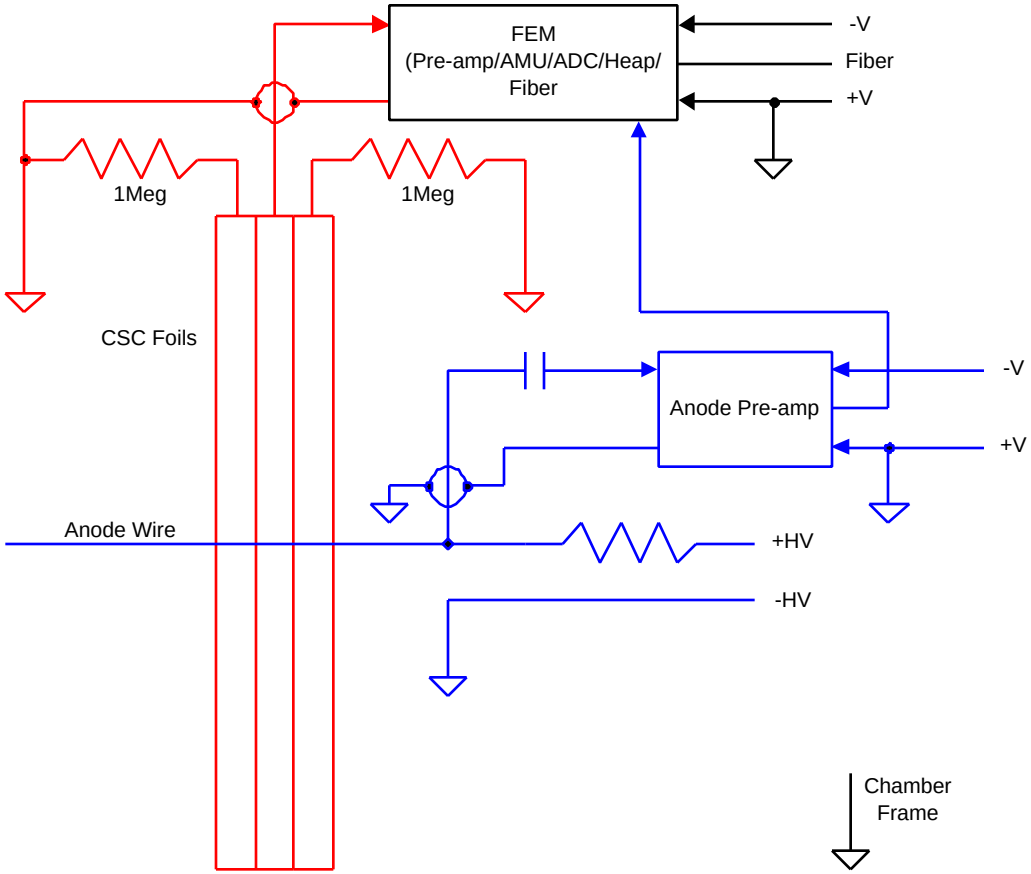

Chamber Frame is the +V power Reference

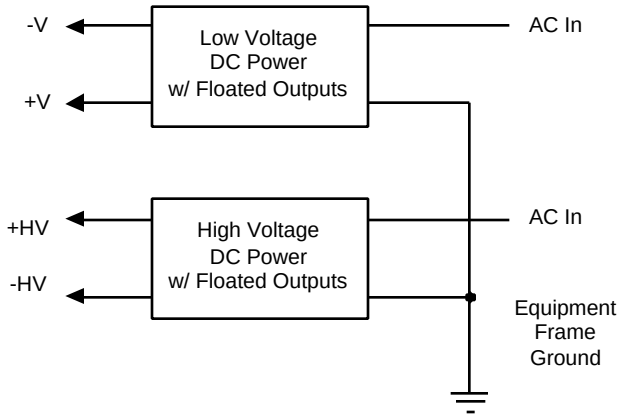

Data Format (a)

	16 bit words	
1 2 3 4 5	Packet Header (5 words)	
6	AMU 1, Sample 1 Cell Address	
7	AMU 1, Sample 2 Cell Address	
8	AMU 1, Sample 3 Cell Address	
9	AMU 2, Sample 1 Cell Address	
10	AMU 2, Sample 2 Cell Address	
11	AMU/ADC 1 data, channel 1, sample 1	1
12	AMU/ADC 1 data, channel 1, sample 2	2
13	AMU/ADC 1 data, channel 1, sample 3	3
14	AMU/ADC 2 data, channel 1, sample 4	4
15	AMU/ADC 2 data, channel 1, sample 5	5
16	AMU/ADC 1 data, channel 2, sample 1	6
17	AMU/ADC 1 data, channel 2, sample 2	7
18	AMU/ADC 1 data, channel 2, sample 3	8
19	AMU/ADC 2 data, channel 2, sample 4	9
20	AMU/ADC 2 data, channel 2, sample 5	10

⋮

Data Format (b)

486	AMU/ADC 1 data, channel 96, sample 1	475
487	AMU/ADC 1 data, channel 96, sample 2	476
488	AMU/ADC 1 data, channel 96, sample 3	477
489	AMU/ADC 2 data, channel 96, sample 4	479
490	AMU/ADC 2 data, channel 96, sample 5	480
491	Low Res Cathode, channels 1 thru 16	1,2,3,...,16
492	Low Res Cathode, channels 17 thru 32	17,18,19,...,32
493	Low Res Cathode, channels 33 thru 48	33,34,35,..., 48
494	Anode, channels 1 thru 16	1,2,3,...,16
495	Anode, channels 17 thru 32	17,18,19,...,32
496	Anode, channels 33 thru 48	33,34,35,...,48
	User Words (8 words max)	
505	Packet Trailer word 1	
506	Packet Trailer word 2	

Production Plan

- Currently looking at our options
- Breaking down tasks may be of benefit:
  - * parts procurement
  - * board fabrication
  - * stuffing boards
  - * testing boards
  - * shipping / handling / storage

Timeline

- Actual start 7/96
- ASICs- design/proto/test needs 14 months
- First cut PC boards 18 months
- Second round PC boards at 22 months
- Target date for fabrication completion is 4/1/99

Current Muon Tracker Status

- System layout is progressing
- Much to be done
  - * staffing
  - * test planning
  - * production planning
  - * testing prototype
  - * full production