REVISIONS							
REV	ZONE	ECN NO.	DESCRIPTION	BY	DATE	CKR	APP

1. MATERIAL: ALUMINUM 6061-T6.

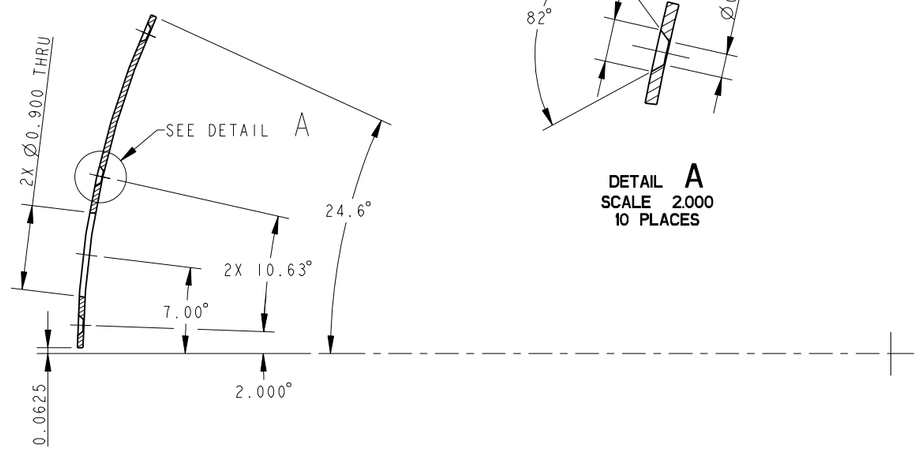

SECTION A-A

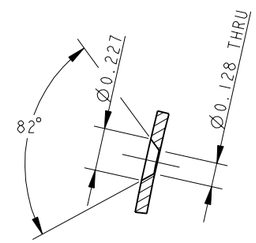

DETAIL A
SCALE 2.000
10 PLACES

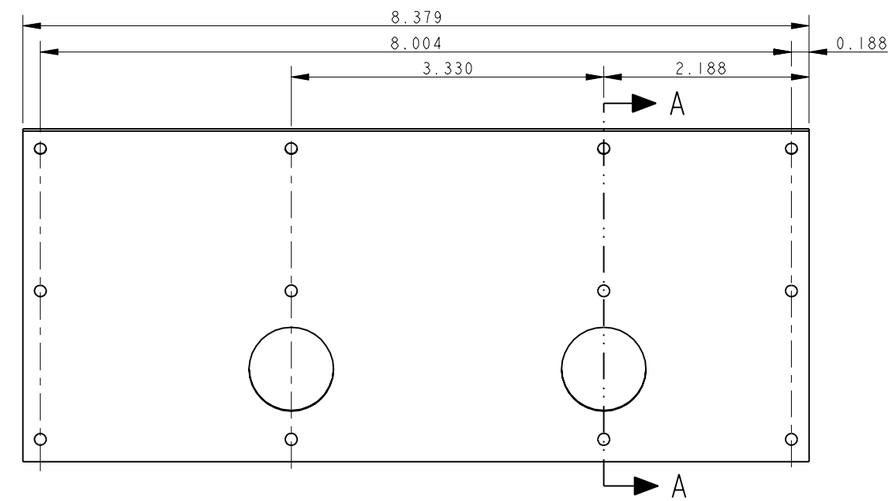

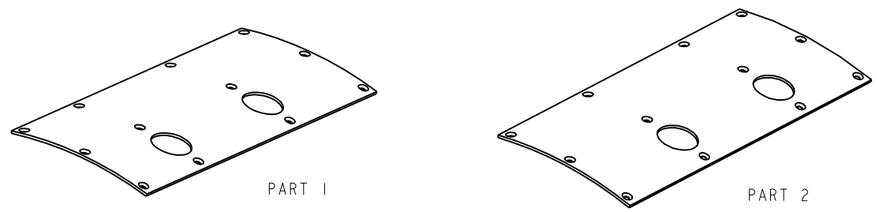

PART 1 - AS DETAILED
PART 2 - MIRROR IMAGE

OUTSTANDING ECN NUMBERS	INTERPRET IN GENERAL ACCORDANCE WITH ASME Y14.5M-1994	THIRD ANGLE PROJECTION		BROOKHAVEN NATIONAL LABORATORY
	UNLESS OTHERWISE SPECIFIED ALL DIMENSIONS ARE IN INCHES.	DRAWN BY: RUGGIERO	31-Oct-05	TITLE: PHENIX MPC SKIN_RADIAL-LEFT-RIGHT_MODULE
	DECIMAL TOLERANCES X.X ±0.1 X.XX ±0.02 X.XXX ±0.005 ANGLES ± 0.5	DESIGN APPROVAL: -	-	
		CHECKED BY: -	-	
		ENGINEER APPROVAL: -	-	SIZE: C DRAWING NUMBER: 105-0219-015 REV. A
	125 FINISH; BREAK SHARP EDGES .015 MAX. .005 MIN.	SUPERVISOR APPROVAL: -	-	
		Q.A. APPROVAL: -	-	Q.A. CATAGORY: A-3 SCALE: 1.000 WEIGHT: NA SHEET 1 OF 1

NAME:RUGGIERO OBJECT:105-0219-015 DATE:03-Nov-05 15:21:31