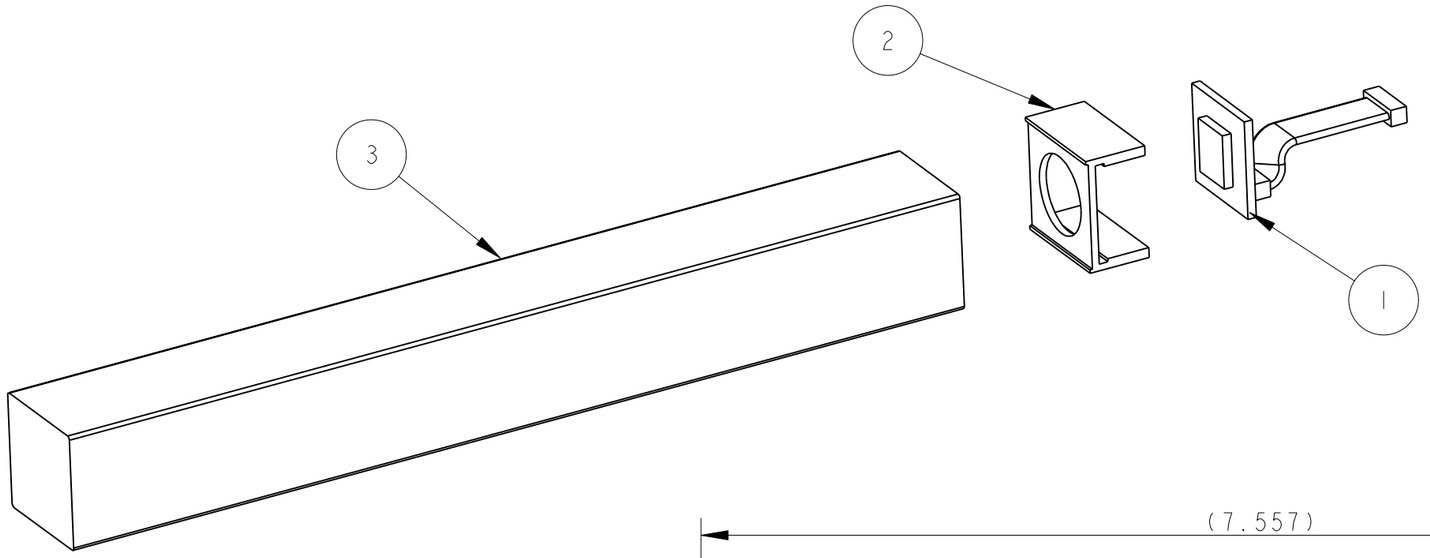

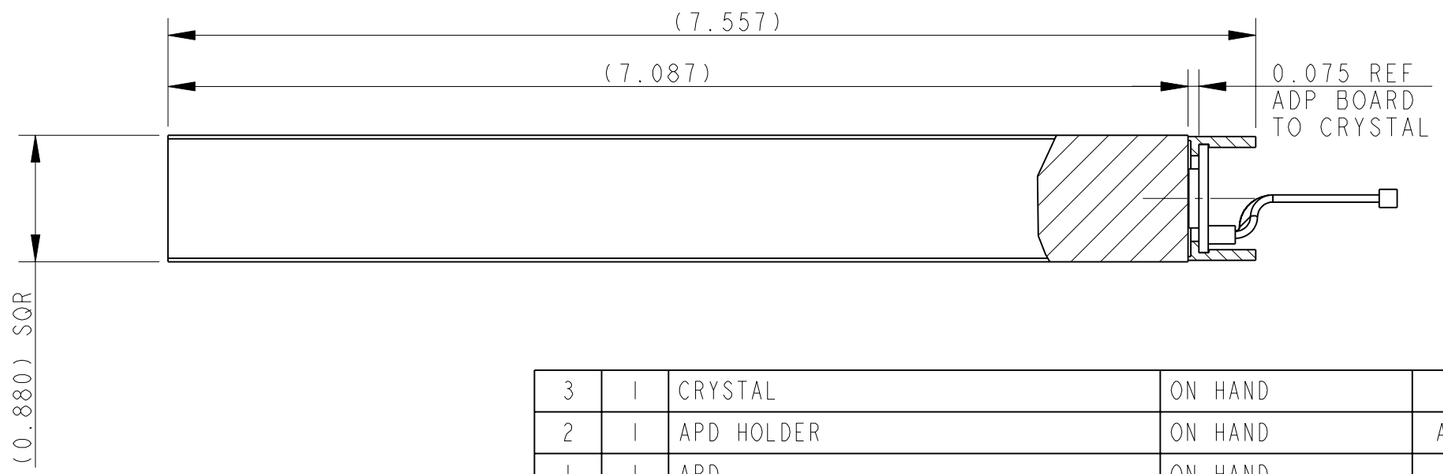

DET	QTY	DESCRIPTION	PART NUMBER	MODEL NAME
3	1	CRYSTAL	ON HAND	CRYSTAL
2	1	APD HOLDER	ON HAND	APD-HOLDER
1	1	APD	ON HAND	APD

THIRD ANGLE PROJECTION

NEXT ASSEMBLY

INTERPRET IN GENERAL ACCORDANCE WITH ASME Y14.5M-1994

UNLESS OTHERWISE SPECIFIED: ALL DIMENSIONS ARE IN INCHES. DECIMAL TOLERANCES
X.X ±0.1
X.XX ±0.01
X.XXX ±0.001
ANGLES ± 0.5

DRAWN BY:	RUGGIERO	07-Oct-05
CHECKED BY:	-	
COGNIZANT ENGINEER/ SCIENTIST:		
Q.A. APPROVAL:	-	
SAFETY ENGINEER:		

NA ✓ FINISH

BREAK EDGES: MAX. NA MIN. NA

CDD DWG NUMBER

BROOKHAVEN NATIONAL LABORATORY

managed by Brookhaven Science Associates for the U.S. Department of Energy
Upton, NY 11973

PROJECT: PHENIX

SYSTEM: MPC

MODEL/DRAWING NAME: CRYSTAL-ASSEMBLY

SIZE B | DRAWING NUMBER: 105-0219-004 | REV. A

Q.A. CATEGORY: A-3 | SCALE: 1.000 | WEIGHT: NA | SHEET 1 OF 1

NAME:RUGGIERO OBJECT:105-0219-004 DATE:03-Nov-05 15:09:26