The PHENIX Muon Identifier Front End Electronics

Andrew Glenn

(University of Tennessee),

for the PHENIX collaboration

April APS Meeting in Washington, D.C.

The Experiment

South

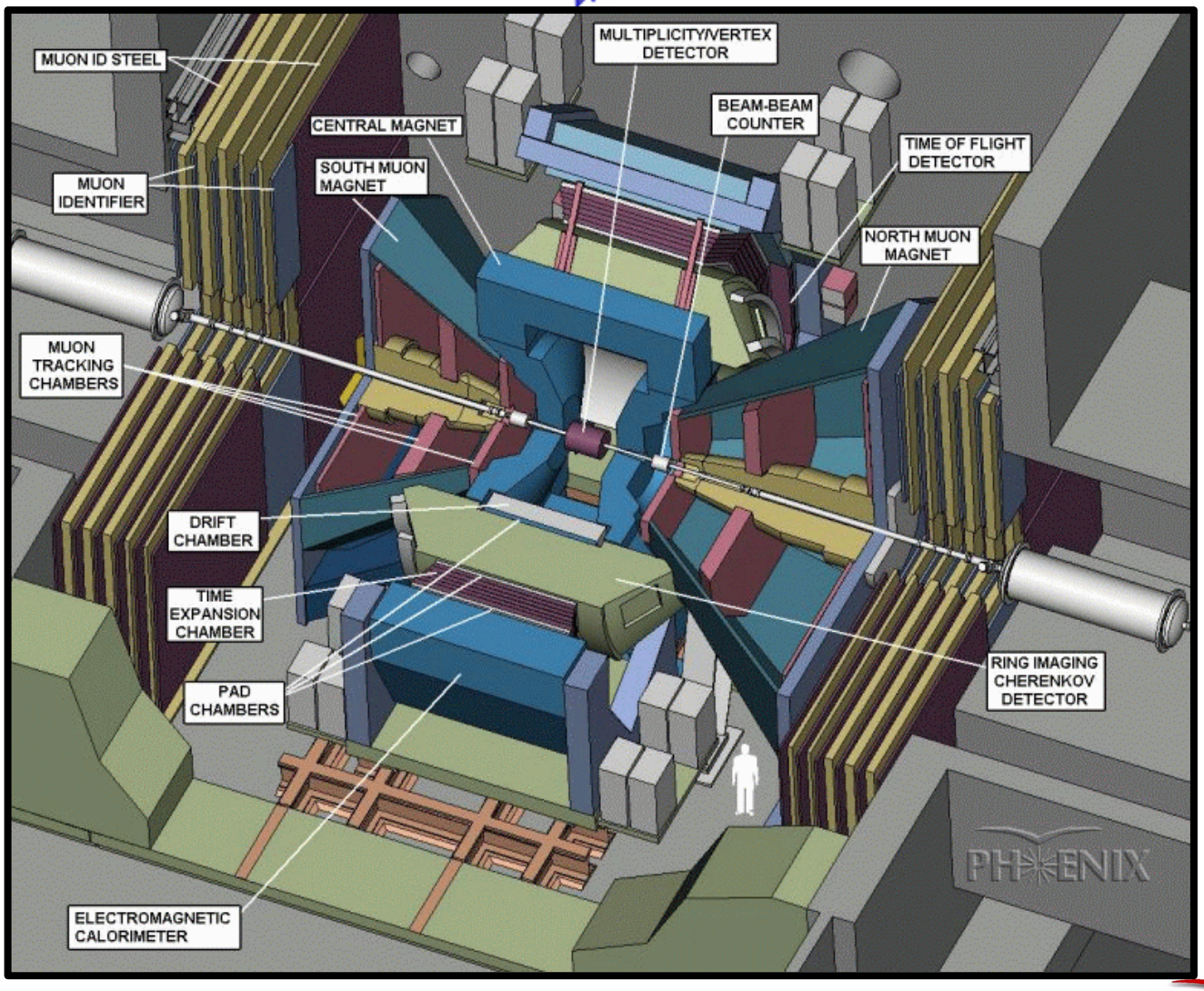

North

The Muon Identifier

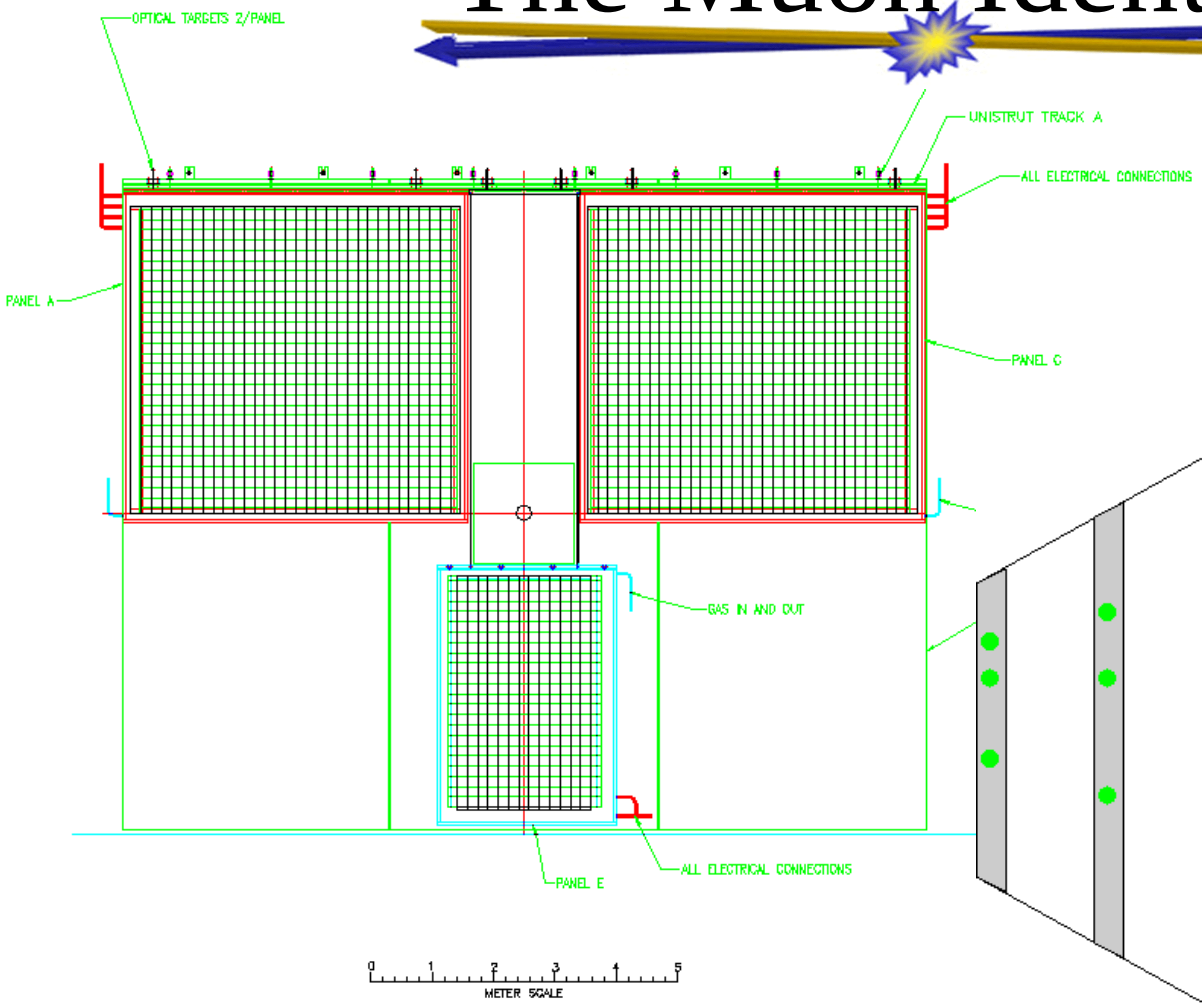

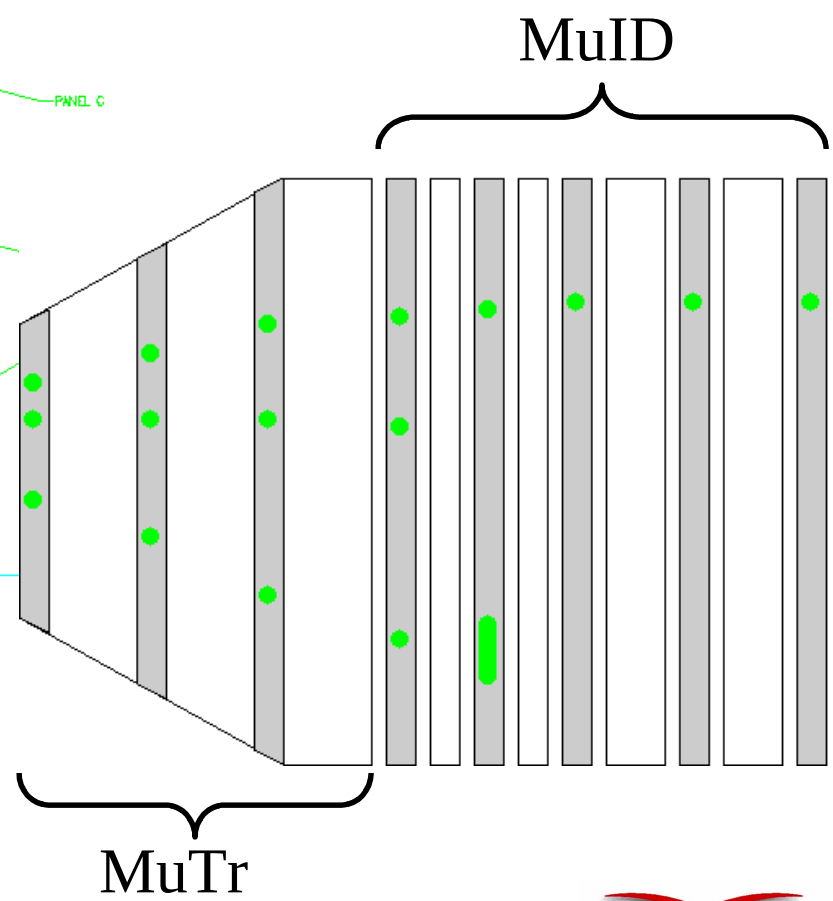

6340 Tubes per arm

3170 Active Channels

The MuID Main Functions

- Distinguish muons from other particles, primarily pions
  - μ π separation of ~$3*10^{-3}$
- Provide triggering capability
  - Large groupings of ORed tubes from lemo pseudo-trigger outputs for commissioning, cosmic-ray trigger, and possible fallback.
  - Optical fiber outputs for full tracking trigger. (J. Newby V10.008)

The Muid FEE Main Components

- In-panel Amplifier/HV Distribution Boards
- Readout Cards (ROCs)
- Front End Module Cards (FEMs)
- Transition Cards, Backplanes, Crates

Basic Data Flow For 1 Orientation

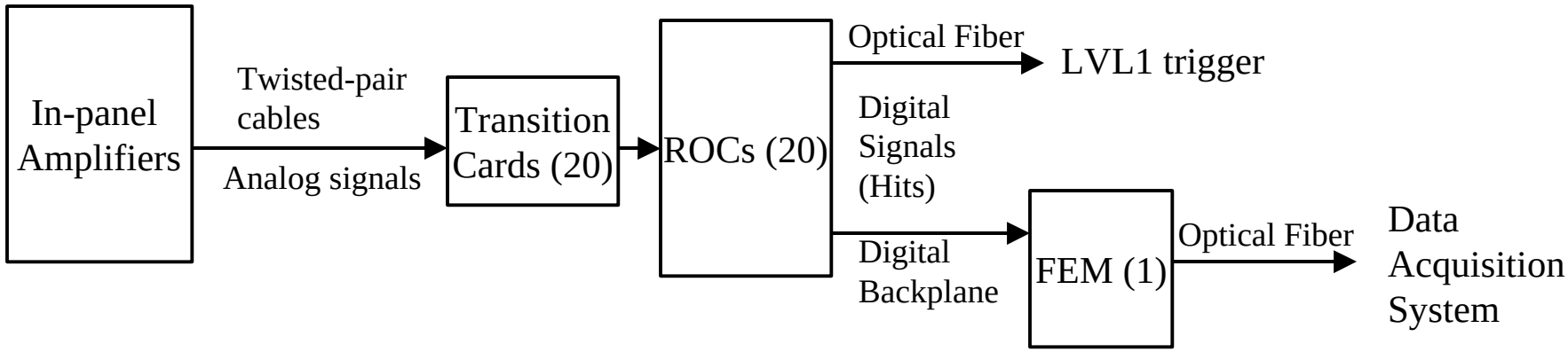

In-panel Amplifier/HV Boards

- Produce Differential Output of ~± 250mV
- Push Analog Signals Over ~30 meter Twisted-pair Cable
- Must Stand the Test of Time
  - Polyfuses
  - Double-diode protection against broken wire
  - Diode clamps prevent reverse-bias

MuID FEE Diagram

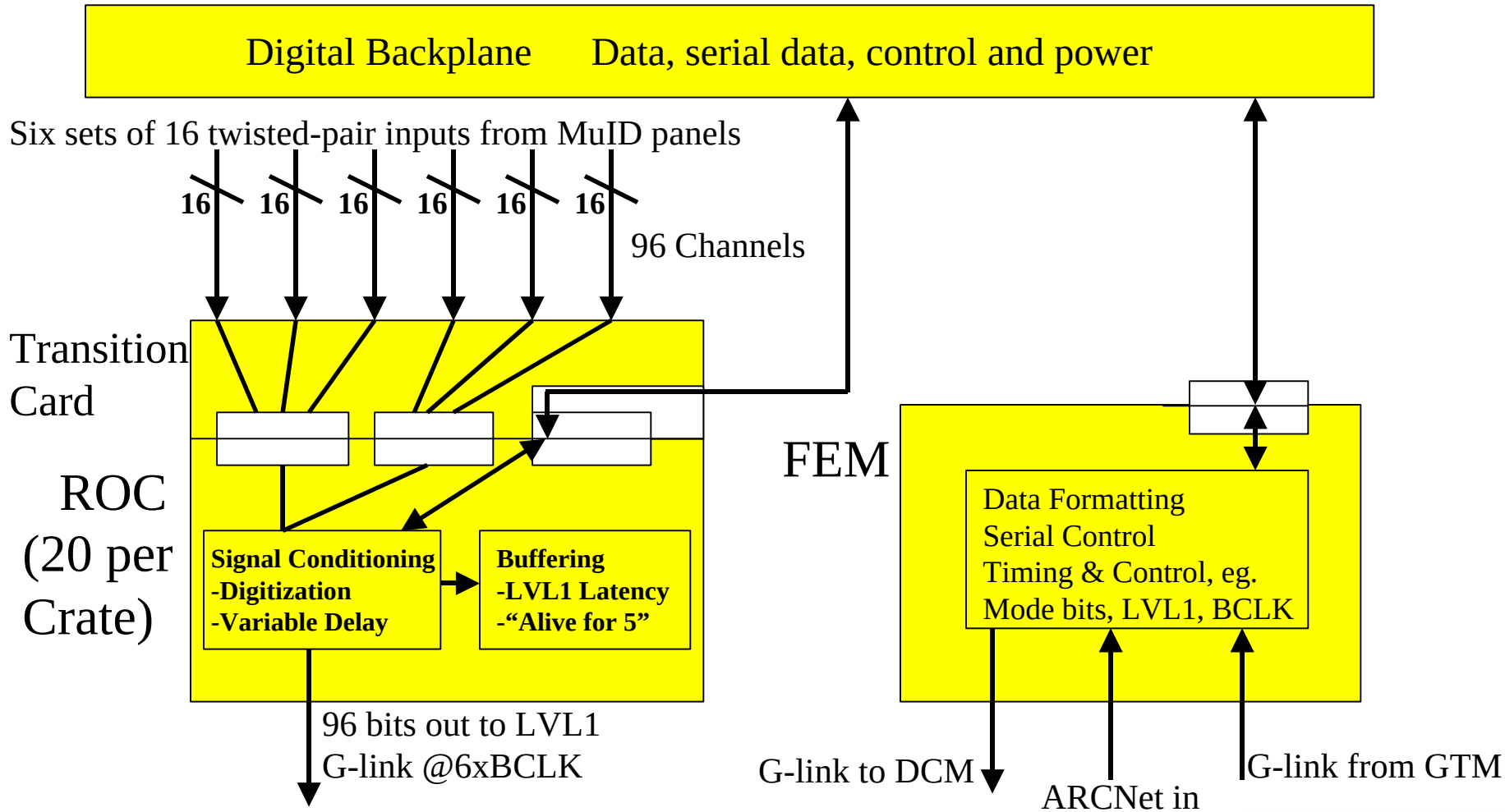

MuID ROC Diagram

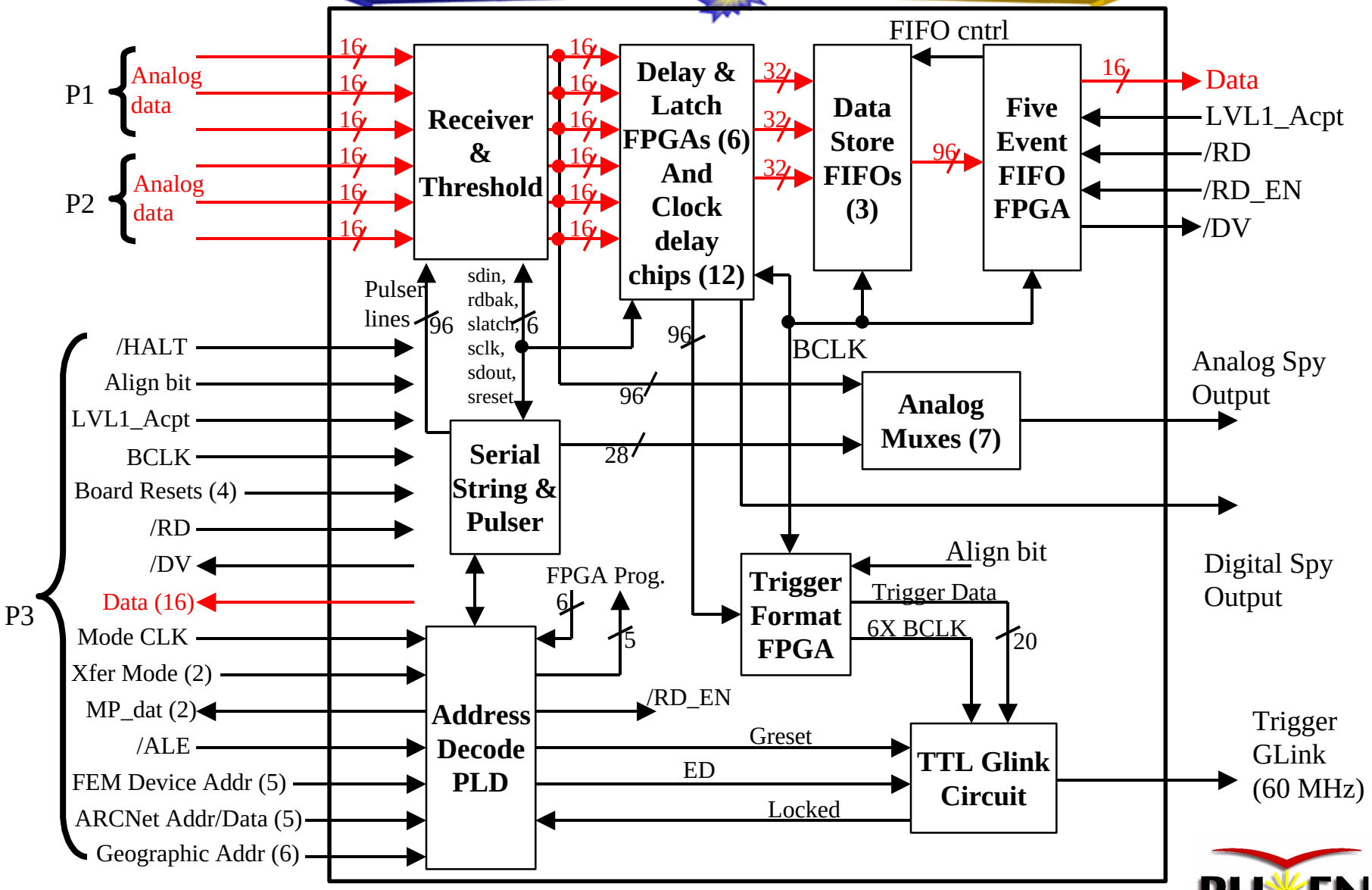

Andrew Glenn 5/1/01

MuID FEM Diagram

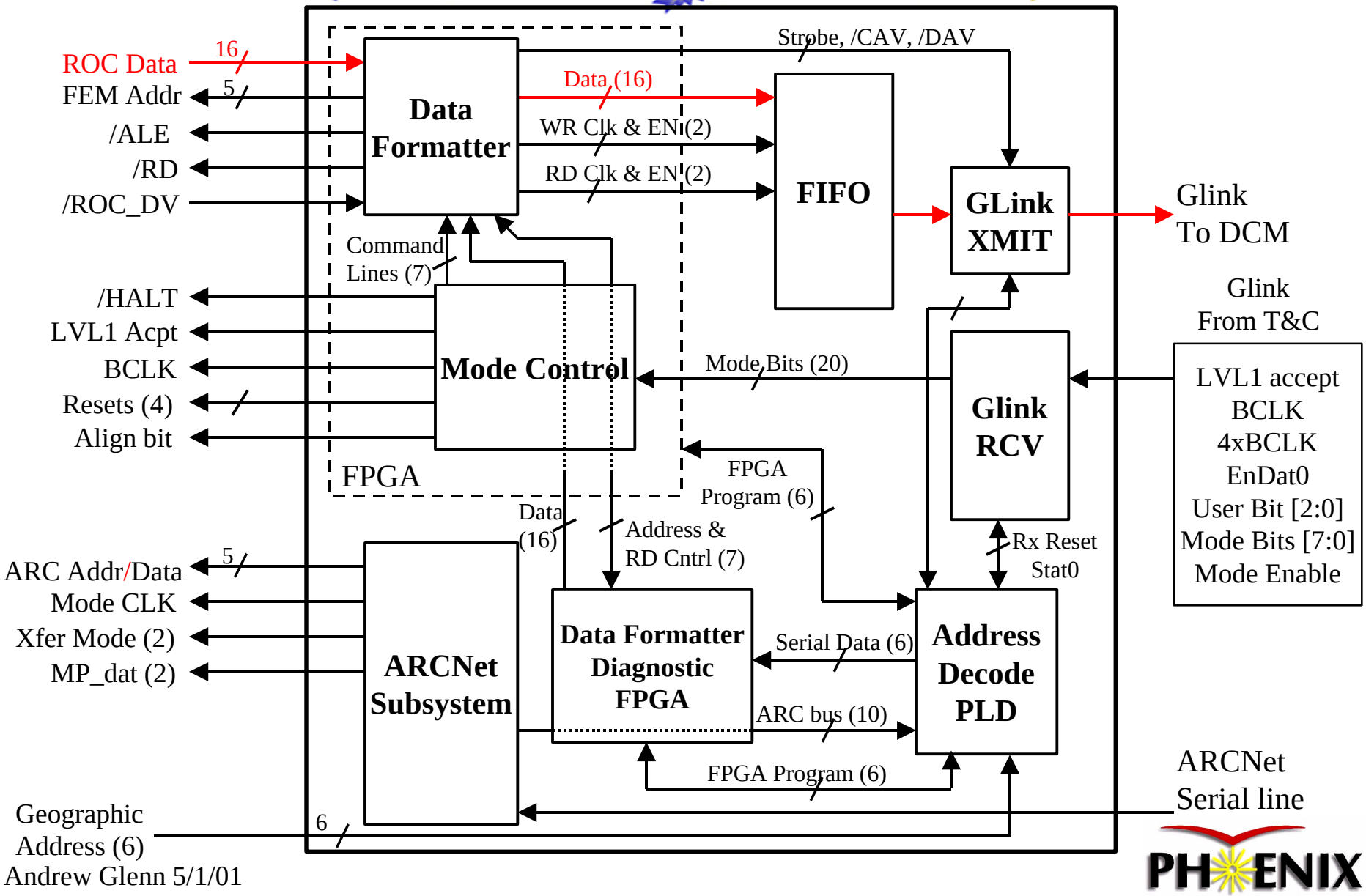

Andrew Glenn 5/1/01

Other Components

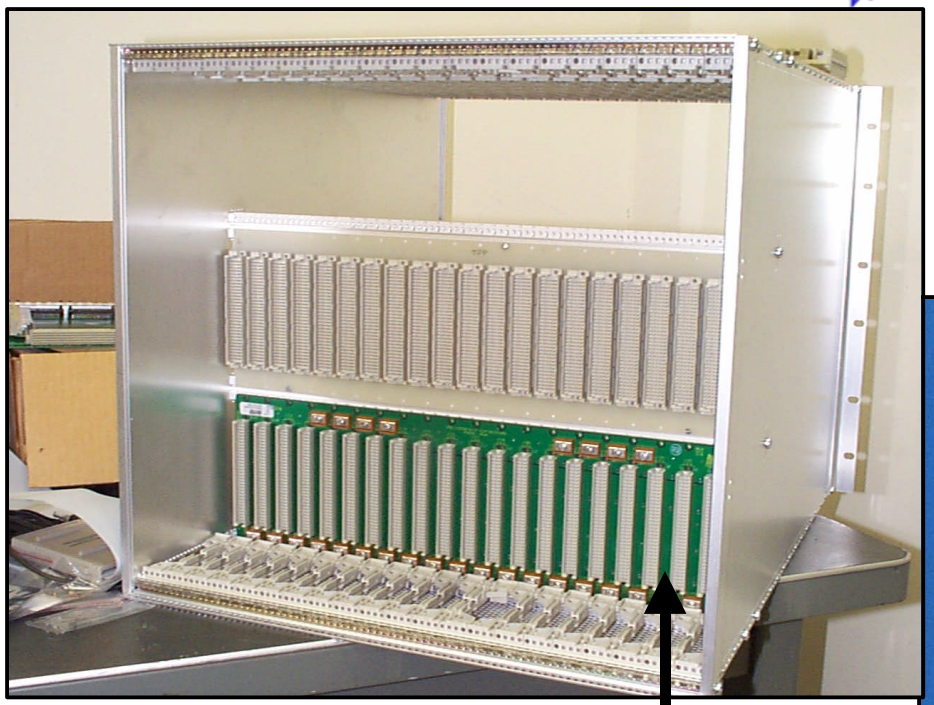

Crate

Digital Backplane

Transition Card

Passthrough backplane

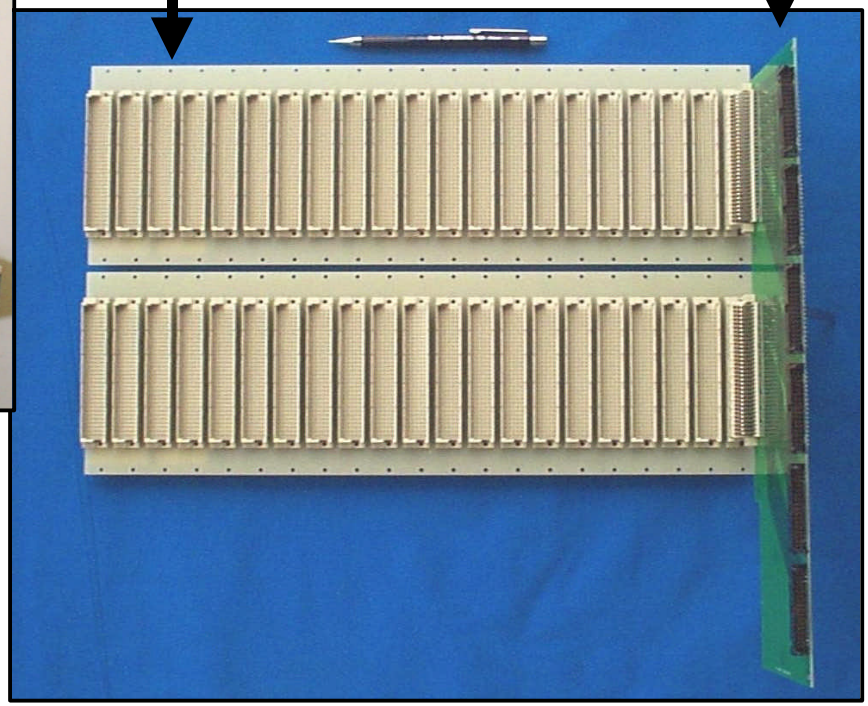

2 Crates per rack:

1 for horizontal tubes and 1 for vertical

MuID FEE Photos

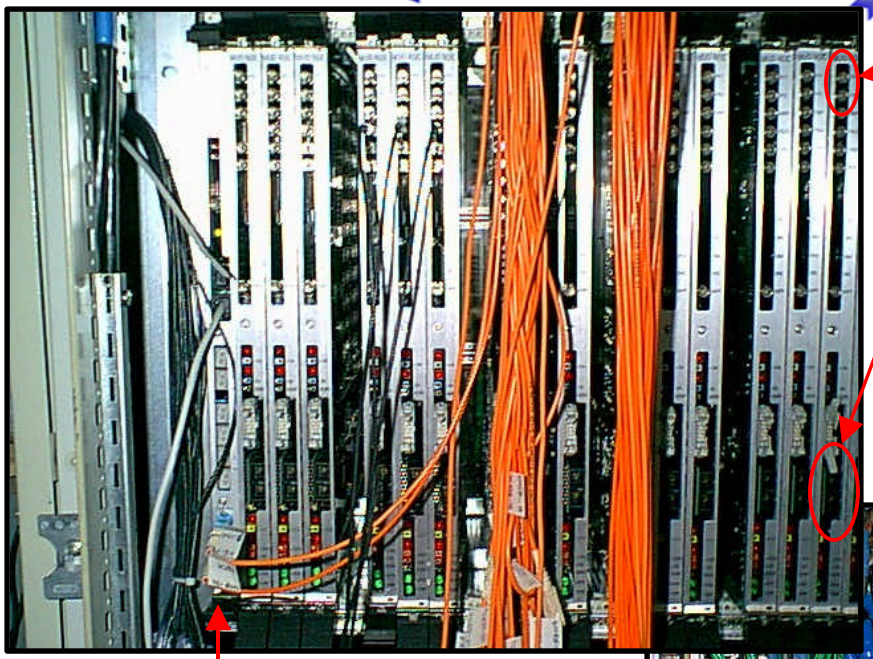

Pseudo-trigger outputs

To Trigger

FEM

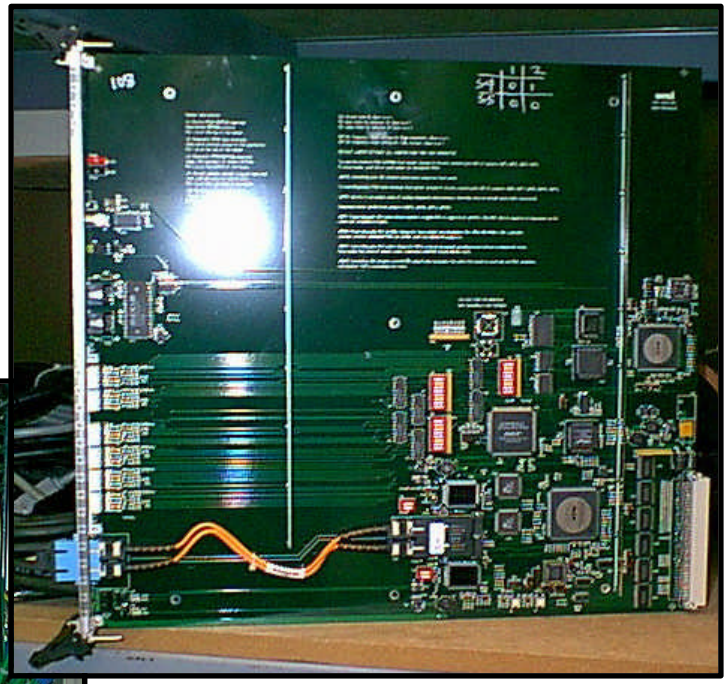

FEM

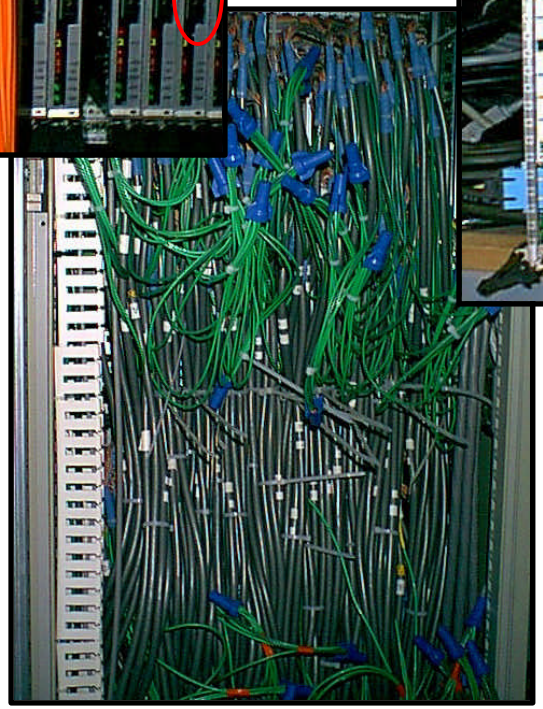

Signal Wires

Communication Overview

- Slow Controls (Timing Delays, Thresholds …)
  - Serial Downloads via ARCNet to FEM
- Timing and Modebits from Granule Timing Module (GTM)
  - Fiber Optic G-Link (On FEM)
- Formatted Data to Data Collection Module (DCM)
  - Fiber Optic G-Link (On FEM)
- Level1 Trigger
  - Lemo Cable Pseudo-trigger outputs (commissioning)
  - 6x Fiber Optic G-Link (Full Tracking Trigger)

ARCNet GUIs

Java based GUIs set various parameters over ARCNet via a CORBA server.

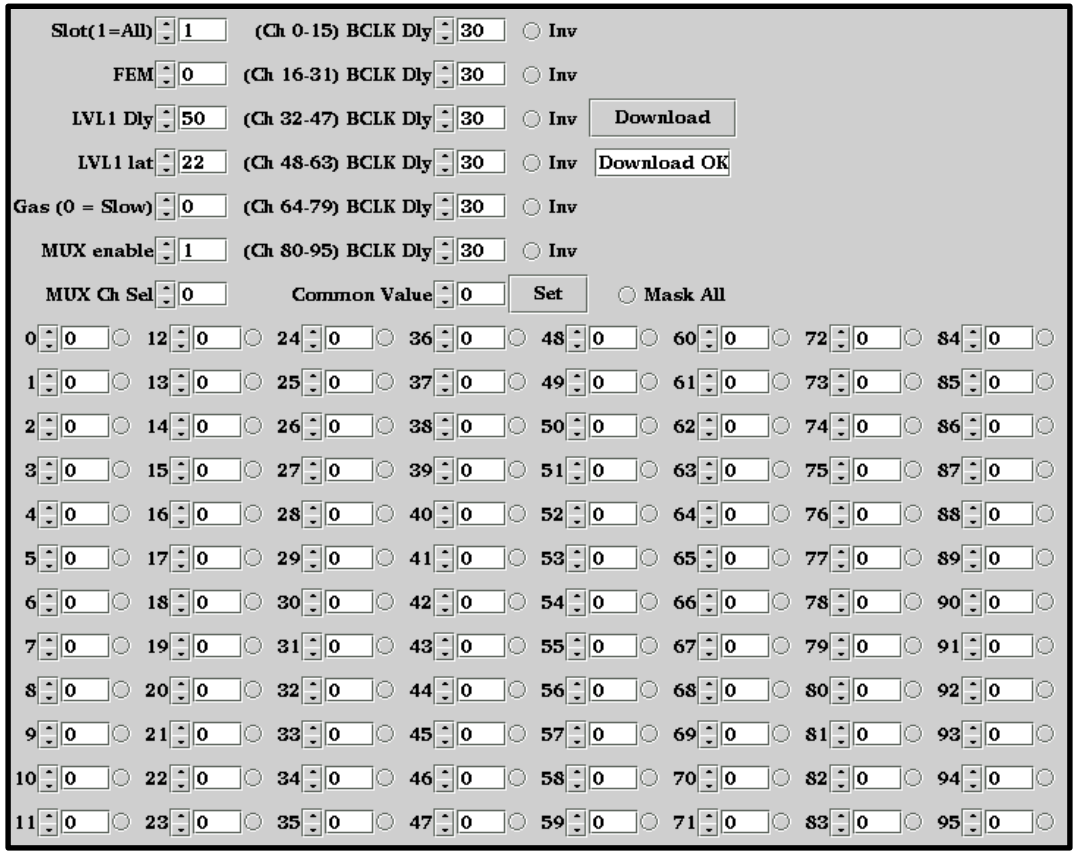

Three Types of Downloads:
-DMUX (Shown)
-DAC
-Miscellaneous

Current FEE Status

- Successful basic commissioning run last year. (H. Sato V10.006)
- All FEMs have passed quality assurance tests.
- All ROCs have passed quality assurance tests.
- Noise and trigger studies at an advanced stage.
- Data in ~1 Month!

Please see http://phenix.bnl.gov/WWW/muon/muid_fee/for additional information.