Size E 160

Design same as size E DIN 41 612

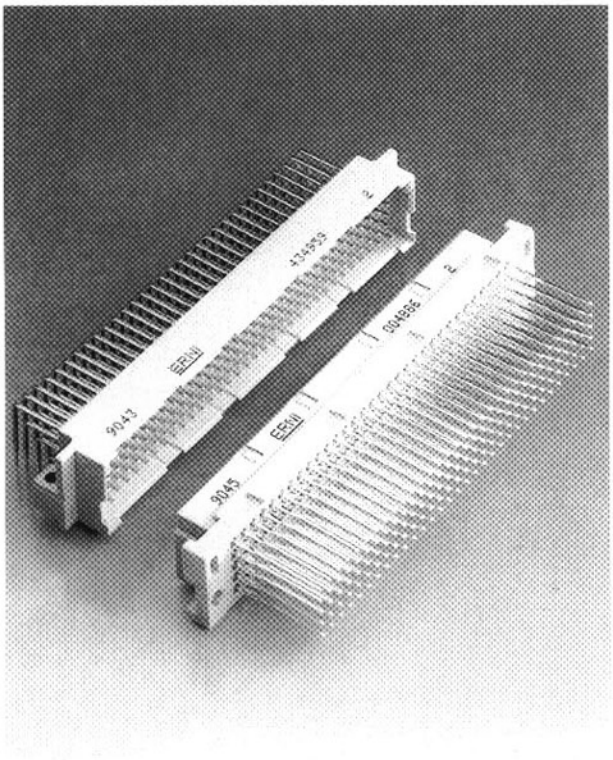

Dimensional drawings

Male connector

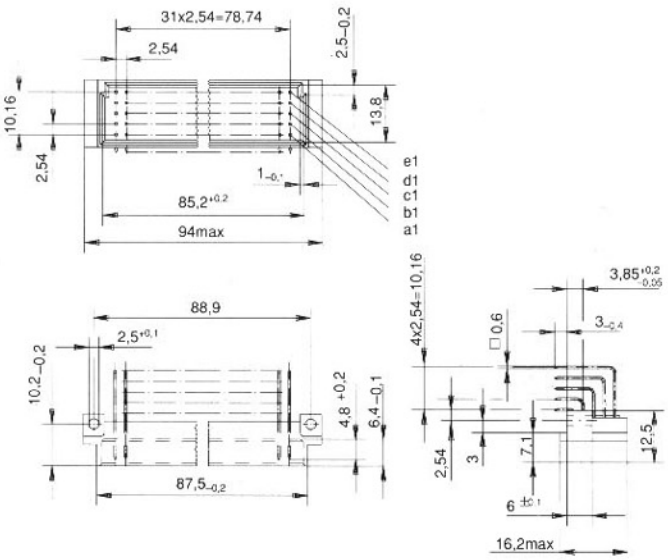

Female connector

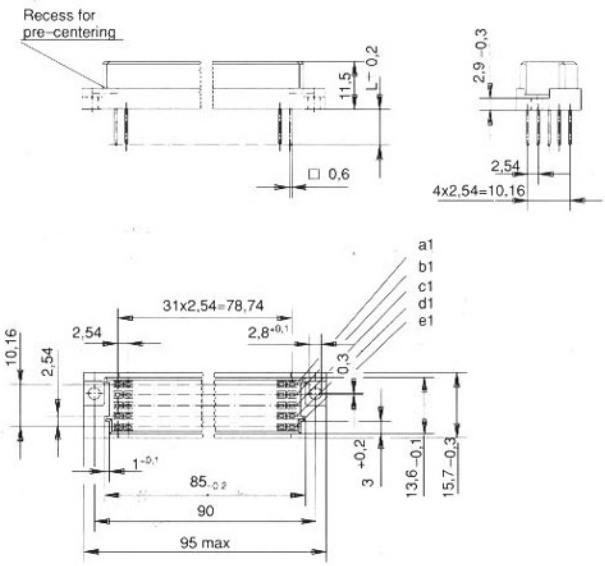

Ordering details

Male connectors

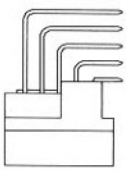

STV–E 160–M–abcde

	107	207	307
PBTP	**004 777**	**004 778**	**004 779**

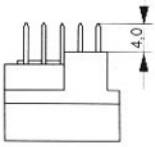

STV–E 160–M–abcde

	107	207	307
PBTP	**013 123**	**013 058**	

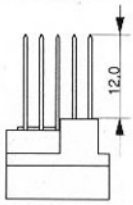

STV–E 160–M–abcde

	107	207	307
PBTP	**013 124**		

Male connectors with early make/last break contacts can be loaded in any posotion. Further versions on request.

For ordering details regarding angled press–fit male connectors please refer to the Data Sheet titled "Plug–in connectors with right–angled press–in terminations".

Female connectors

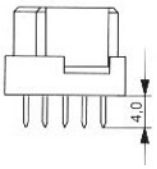

STV–E 160–F–abcde

No cover plate, insulator on buttom side open

	107	207	307
PBTP		**913 994**	

No cover plate, insulator on buttom side open

	107	207	307
PC	**424 871**		

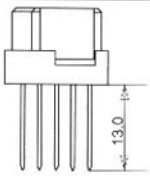

STV–E 160–F–abcde

	107	207	307
PC	**424 872**		

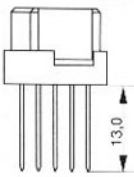

STV–E 160–F–abcde ①

	101	201	301
PC	**594 983**	**594 754**	

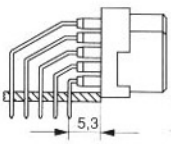

STV–E 160–F–abcde

	101	201	301
PC	**594 905**		

① Entire length of contacts nickel–plated, transfer zone (5 mm) solid–gold plated

Crimp–Snap–In Technique

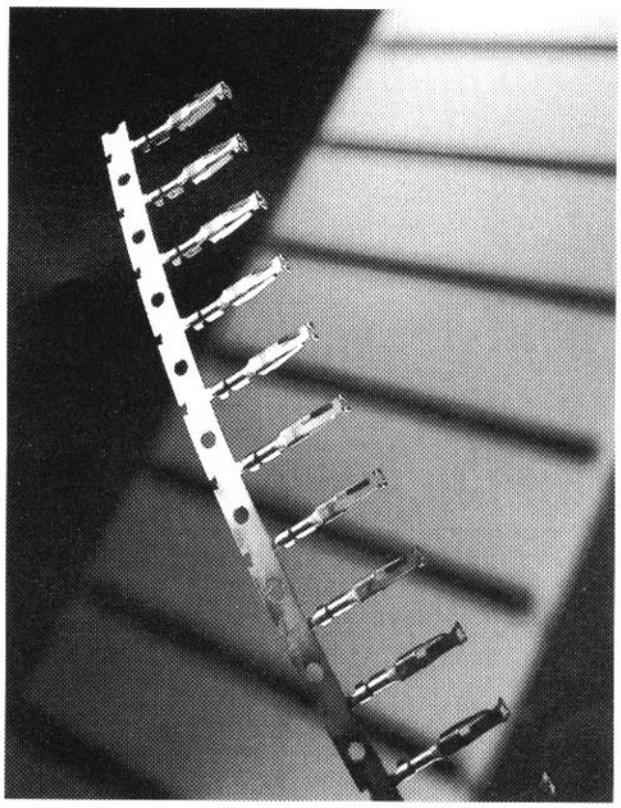

For ordering details regarding female crimp snap–in connectors please refer to the Data Sheet titled "Connectors for the crimp snap–in technique"
For ordering details regarding female press–fit connectors please refer to the Data Sheet titled "ERNIPRESS"

Other versions on request

Part-No.	Page
004777	2
004778	2
004779	2
013058	2
013123	2
013124	2
424871	2
424872	2
594754	2
594905	2
594983	2
913994	2