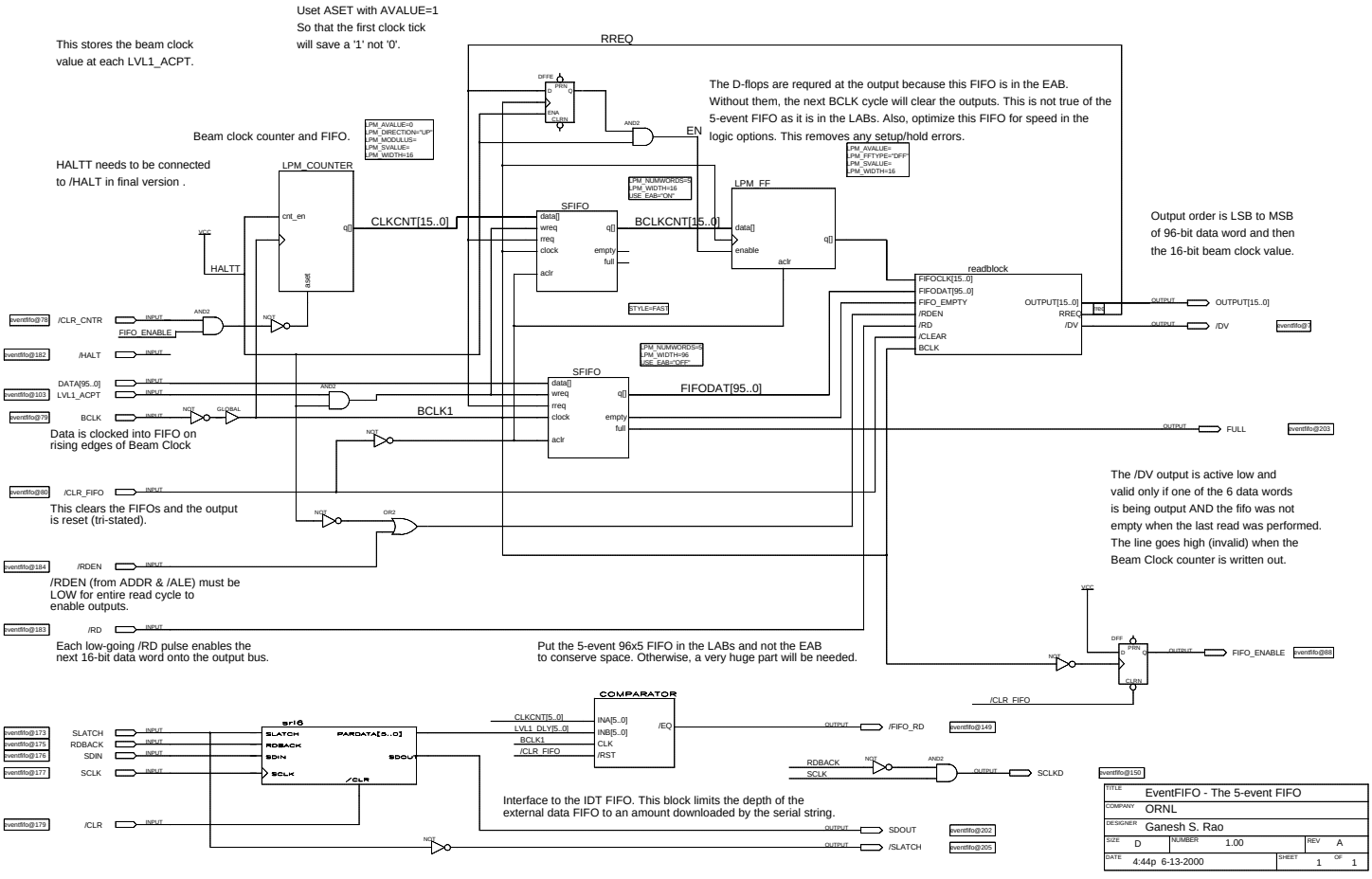
This stores the beam clock value at each LVL1_ACPT.
Uset ASET with AVALUE=1 So that the first clock tick will save a '1' not '0'.
RREQ
The D-flops are requred at the output because this FIFO is in the EAB. Without them, the next BCLK cycle will clear the outputs. This is not true of the 5-event FIFO as it is in the LABs. Also, optimize this FIFO for speed in the logic options. This removes any setup/hold errors.
Beam clock counter and FIFO.
LPM_AVALUE=0
LPM_DIRECTION="UP"
LPM_MODULUS=
LPM_SVALUE=
LPM_WIDTH=16
EN
HALTT needs to be connected to /HALT in final version .
LPM_COUNTER
LPM_AVALUE=
LPM_FFTYPE="DFF"
LPM_SVALUE=
LPM_WIDTH=16
LPM_NUMWORDS=5
LPM_WIDTH=16
USE_EAB="ON"
LPM_FF
SFIFO
CLKCNT[15..0]
BCLKCNT[15..0]
Output order is LSB to MSB of 96-bit data word and then the 16-bit beam clock value.
readblock
HALTT
STYLE=FAST
/CLR_CNTR
FIFO_ENABLE
/HALT
LPM_NUMWORDS=5
LPM_WIDTH=96
USE_EAB="OFF"
DATA[95..0]
LVL1_ACPT
BCLK
FIFODAT[95..0]
BCLK1
Data is clocked into FIFO on rising edges of Beam Clock
FULL
/CLR_FIFO
The /DV output is active low and valid only if one of the 6 data words is being output AND the fifo was not empty when the last read was performed. The line goes high (invalid) when the Beam Clock counter is written out.
This clears the FIFOs and the output is reset (tri-stated).
/RDEN
/RDEN (from ADDR & /ALE) must be LOW for entire read cycle to enable outputs.
/RD
Each low-going /RD pulse enables the next 16-bit data word onto the output bus.
Put the 5-event 96x5 FIFO in the LABs and not the EAB to conserve space. Otherwise, a very huge part will be needed.
FIFO_ENABLE
/CLR_FIFO
COMPARATOR
SFIO
SLATCH
RDBACK
SDIN
SCLK
/CLR
PARDATA[5..0]
SDOUT
CLKCNT[5..0]
LVL1_DLY[5..0]
BCLK1
/CLR_FIFO
INA[5..0]
INB[5..0]
CLK
/RST
/EQ
/FIFO_RD
RDBACK
SCLK
SCLKD
Interface to the IDT FIFO. This block limits the depth of the external data FIFO to an amount downloaded by the serial string.
SDOUT
/SLATCH
TITLE EventFIFO - The 5-event FIFO
COMPANY ORNL
DESIGNER Ganesh S. Rao
SIZE D
NUMBER 1.00
REV A
DATE 4:44p 6-13-2000
SHEET 1 OF 1