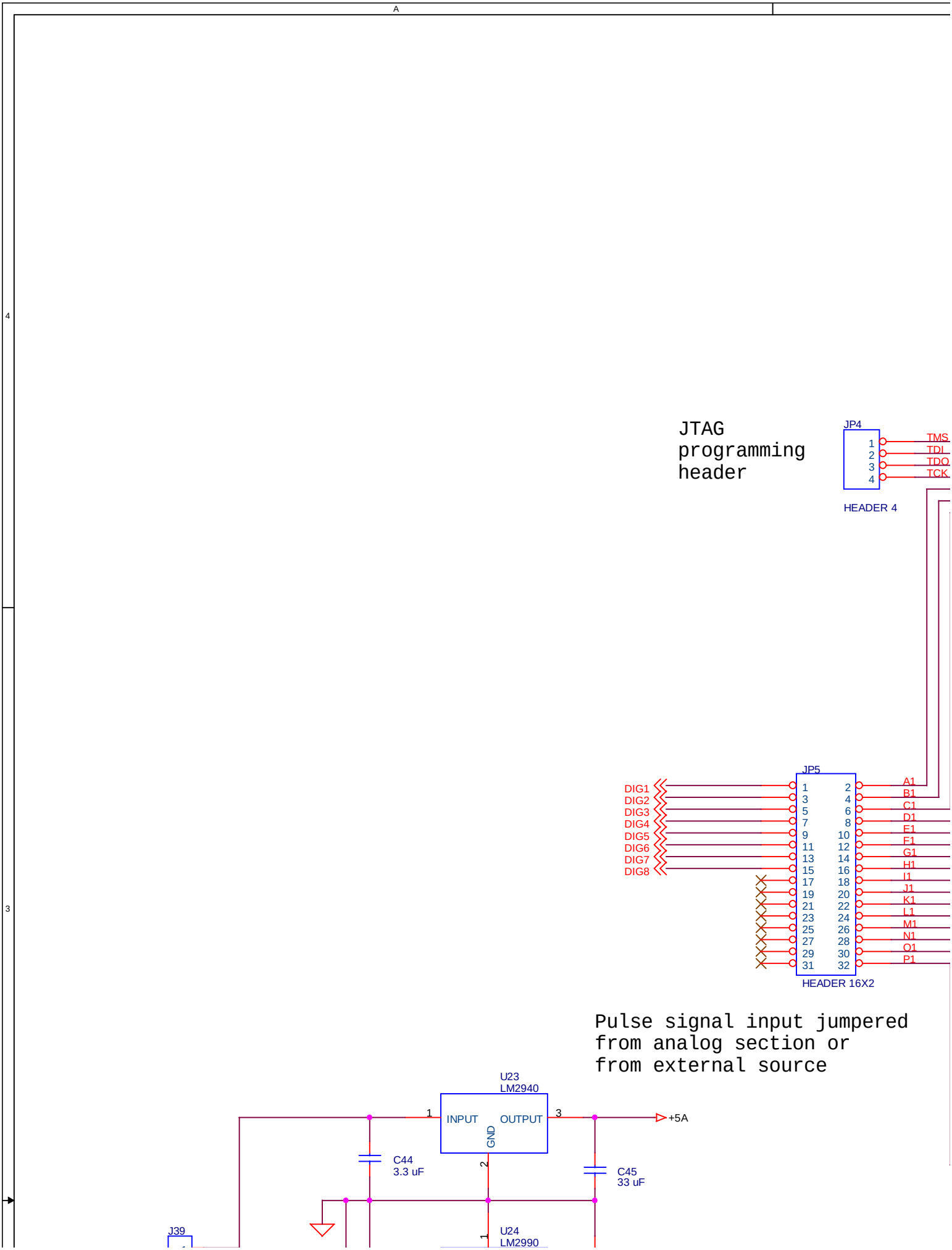
A
4
3
JTAG
programming
header
JP4
1
2
3
4
TMS
TDI
TDO
TCK
HEADER 4
JP5
DIG1
DIG2
DIG3
DIG4
DIG5
DIG6
DIG7
DIG8
A1
B1
C1
D1
E1
F1
G1
H1
I1
J1
K1
L1
M1
N1
O1
P1
HEADER 16X2
Pulse signal input jumpered
from analog section or
from external source
U23
LM2940
INPUT
OUTPUT
GND
+5A
C44
3.3 uF
C45
33 uF
J39
U24
LM2990

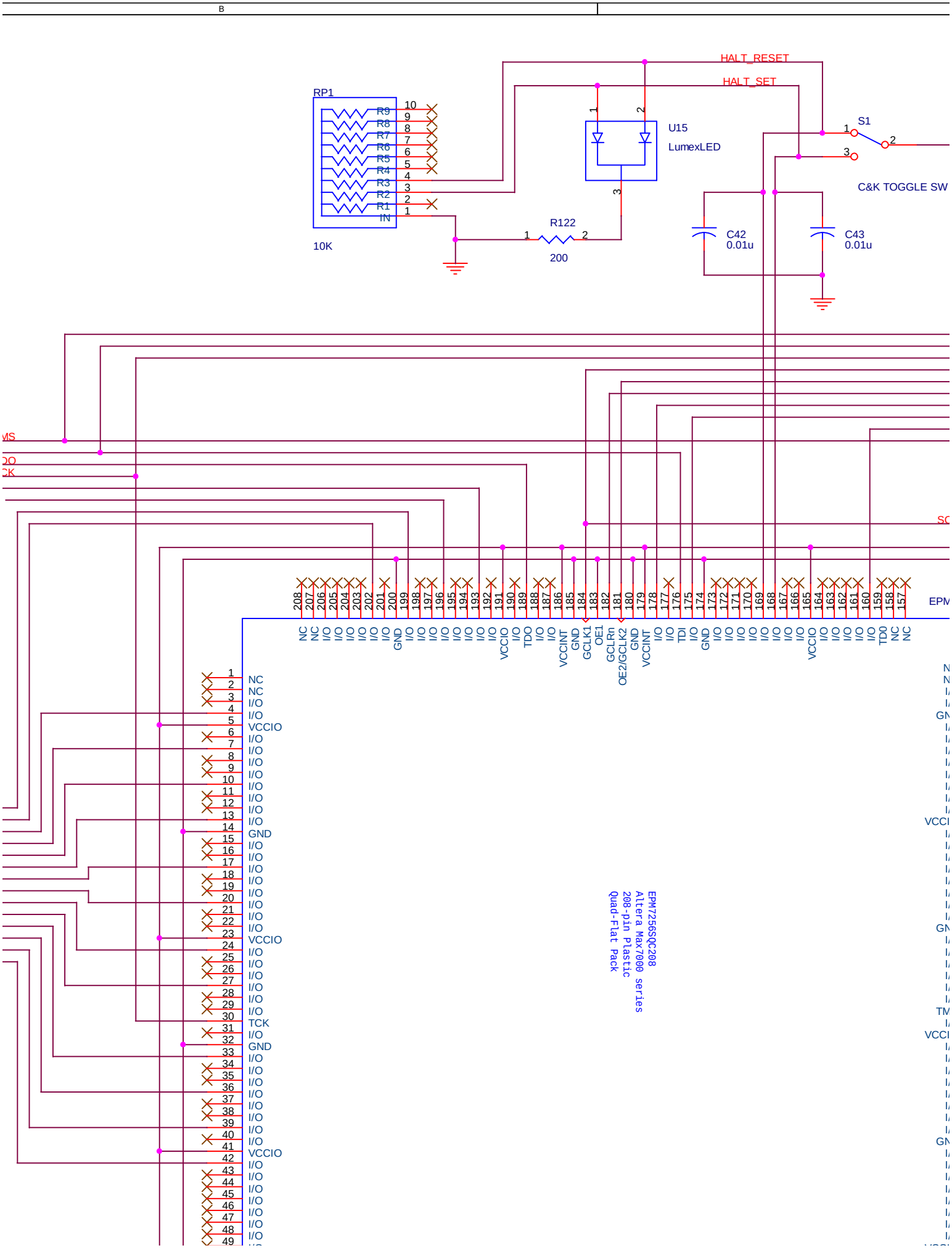
B
HALT_RESET
HALT_SET
RP1
R9
R8
R7
R6
R5
R4
R3
R2
R1
IN
10K
U15
LumexLED
S1
C&K TOGGLE SW
R122
200
C42
0.01u
C43
0.01u
EPM7256SQC208
Altera Max7000 series
208-pin Plastic
Quad-Flat Pack

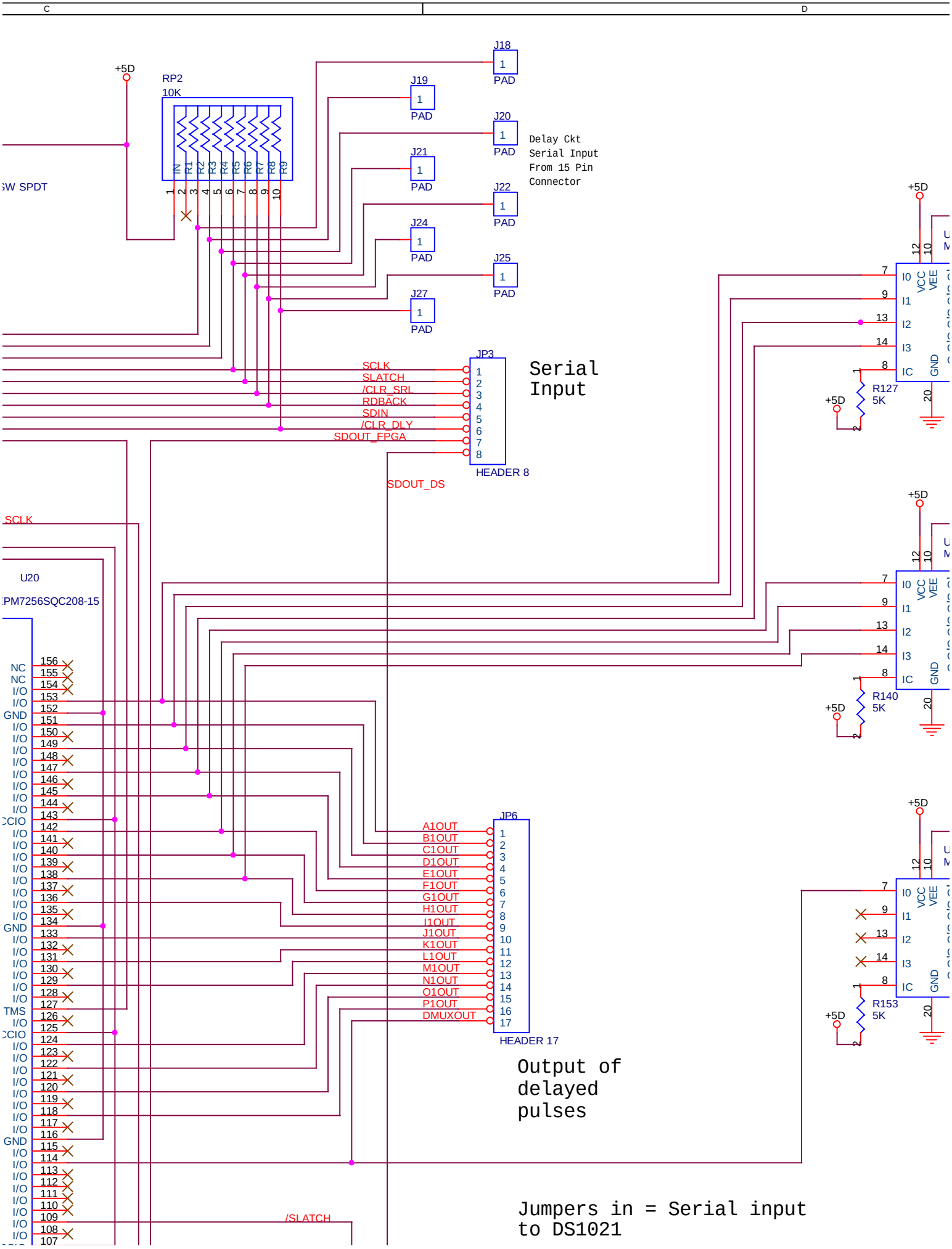
C
D
+5D
RP2
10K
IN R1 R2 R3 R4 R5 R6 R7 R8 R9
SW SPDT
J18
J19
J20
J21
J22
J24
J25
J27
PAD
Delay Ckt
Serial Input
From 15 Pin
Connector
JP3
SCLK
SLATCH
/CLR_SRL
RDBACK
SDIN
/CLR_DLY
SDOUT_FPGA
HEADER 8
Serial
Input
SDOUT_DS
U20
PM7256SQC208-15
JP6
A1OUT
B1OUT
C1OUT
D1OUT
E1OUT
F1OUT
G1OUT
H1OUT
I1OUT
J1OUT
K1OUT
L1OUT
M1OUT
N1OUT
O1OUT
P1OUT
DMUXOUT
HEADER 17
Output of
delayed
pulses
/SLATCH
I0 I1 I2 I3 IC
VCC VEE GND
R127
5K
R140
5K
R153
5K
Jumpers in = Serial input
to DS1021

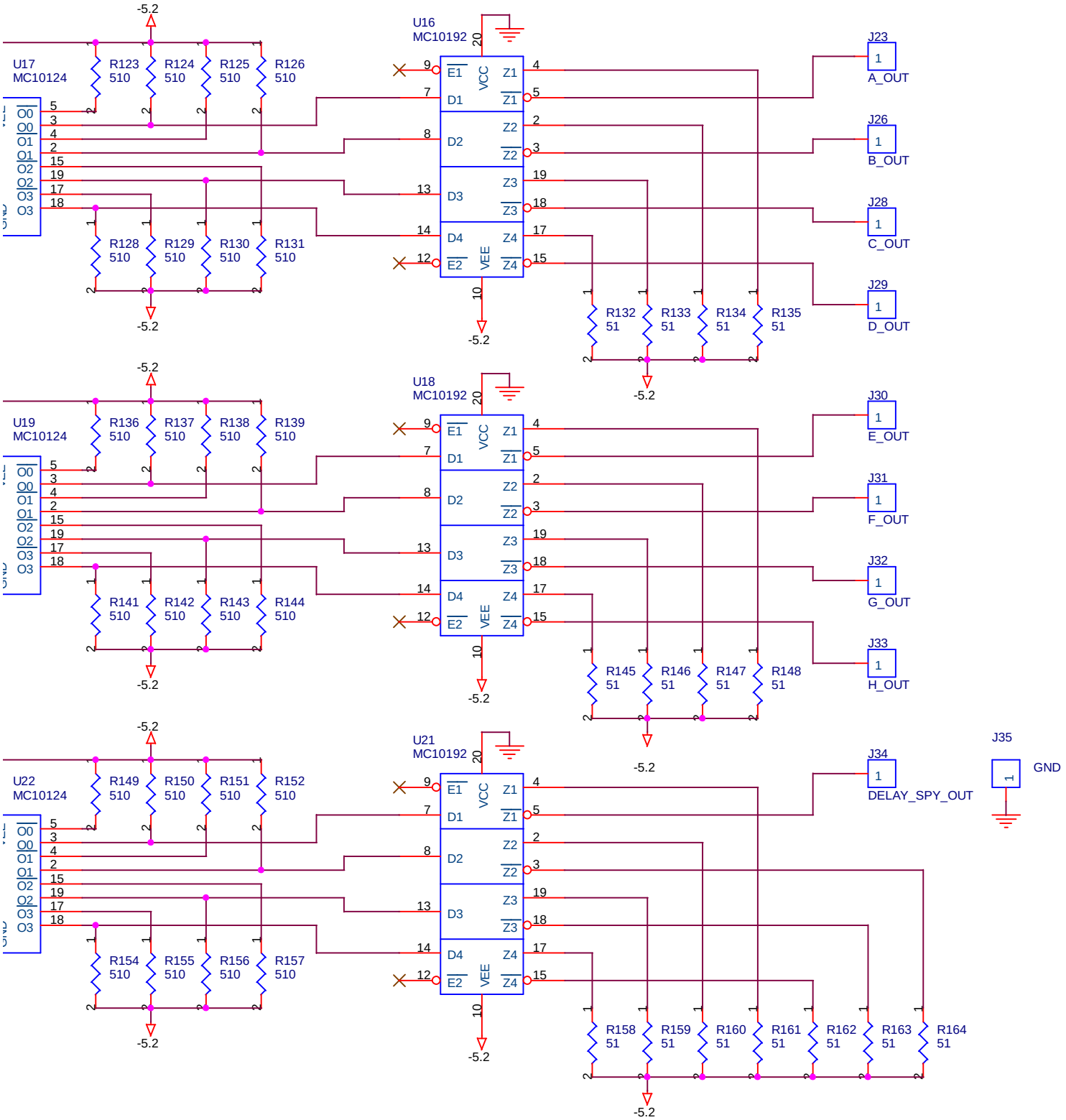
U17
MC10124
U16
MC10192
U18
MC10192
U19
MC10124
U21
MC10192
U22
MC10124
R123 510
R124 510
R125 510
R126 510
R128 510
R129 510
R130 510
R131 510
R132 51
R133 51
R134 51
R135 51
R136 510
R137 510
R138 510
R139 510
R141 510
R142 510
R143 510
R144 510
R145 51
R146 51
R147 51
R148 51
R149 510
R150 510
R151 510
R152 510
R154 510
R155 510
R156 510
R157 510
R158 51
R159 51
R160 51
R161 51
R162 51
R163 51
R164 51
J23
A_OUT
J26
B_OUT
J28
C_OUT
J29
D_OUT
J30
E_OUT
J31
F_OUT
J32
G_OUT
J33
H_OUT
J34
DELAY_SPY_OUT
J35
GND
-5.2
VCC
VEE

4

3

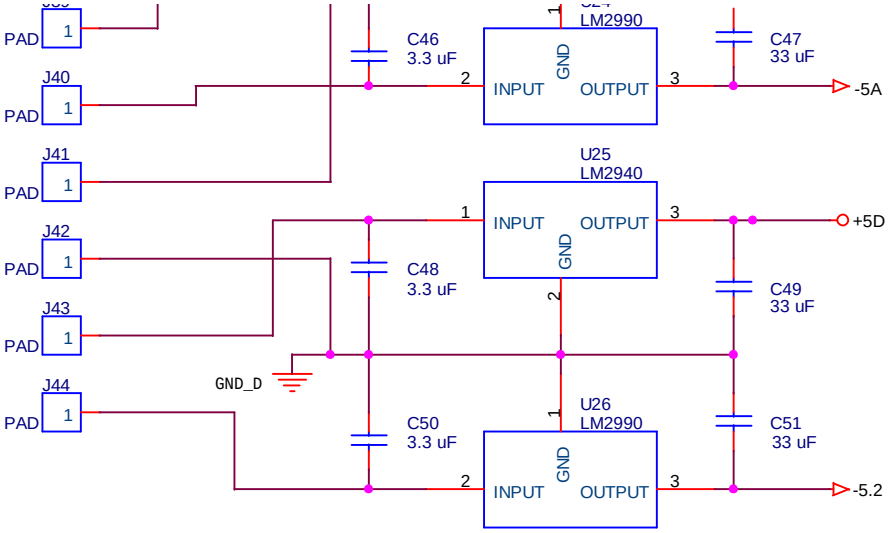

ANALOG AND DIGITAL GNDS
CONNECTED AT PWR INPUT
ONLY

Bypass Capacito

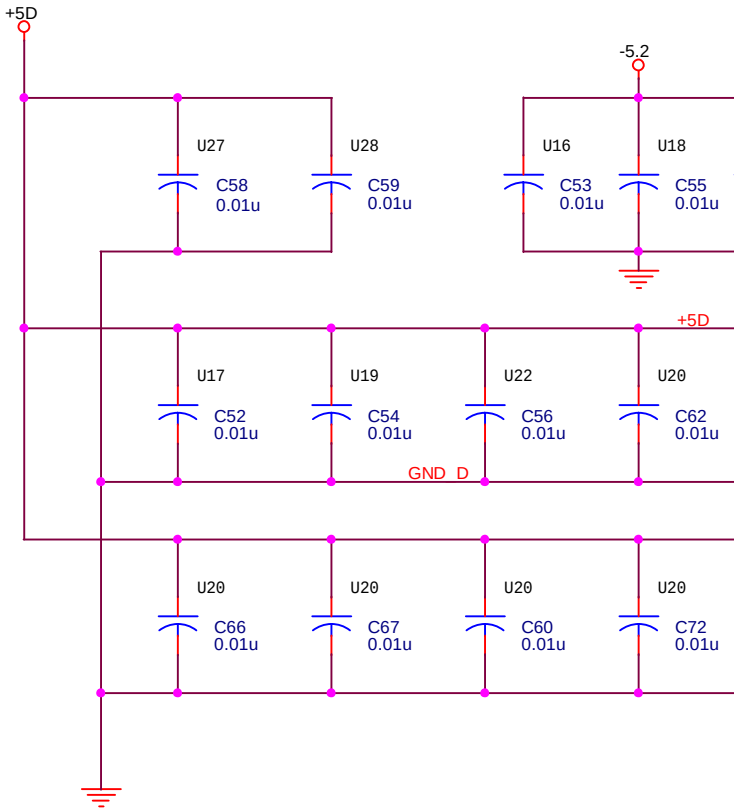

Single-row headers are 3M bra
Double-row headers are 3M bra
Caps are Panasonic 1206 serie
#ECU-V1H103K3M

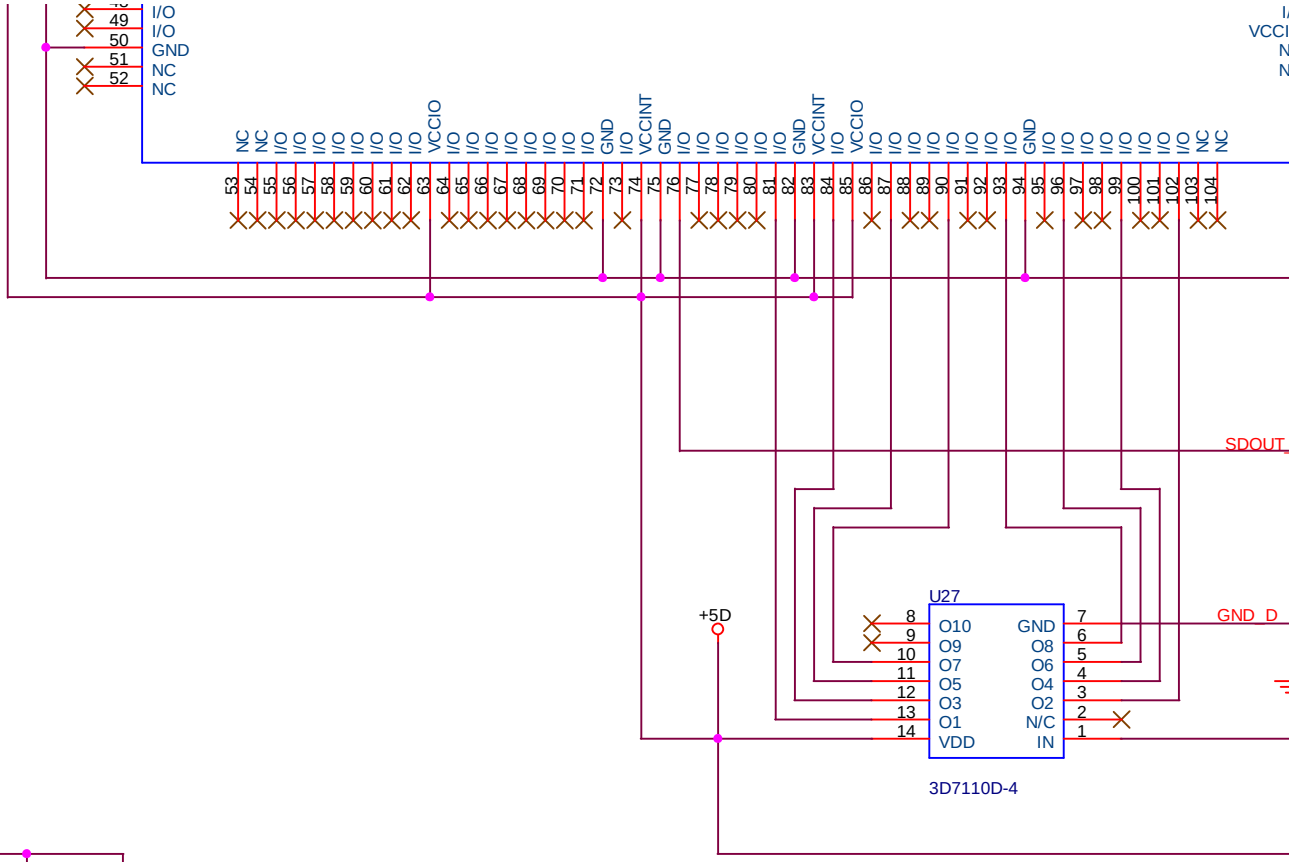

:ors

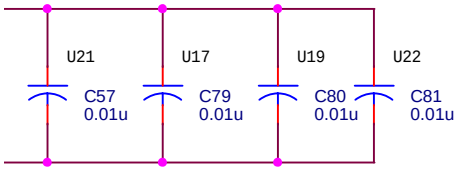

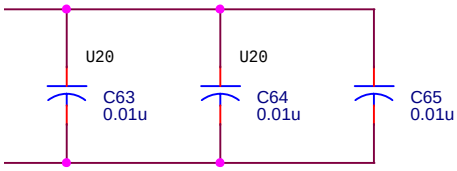

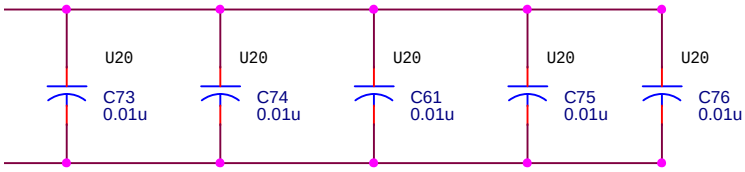

rand 0.1 inch male pin-headers.
rand 0.1-by-0.1 inch male pin-headers.
ies ceramic SMDs Panasonic part

THIS DRAWING PRODUCED BY ORNL INSTRUMENTATION AND CONTROLS DIVISION WITH ORCAD 7.00	REV	MF	DESCRIPTION OR MEMO NO. REVISION OR ISSUE PURPOSE
B			

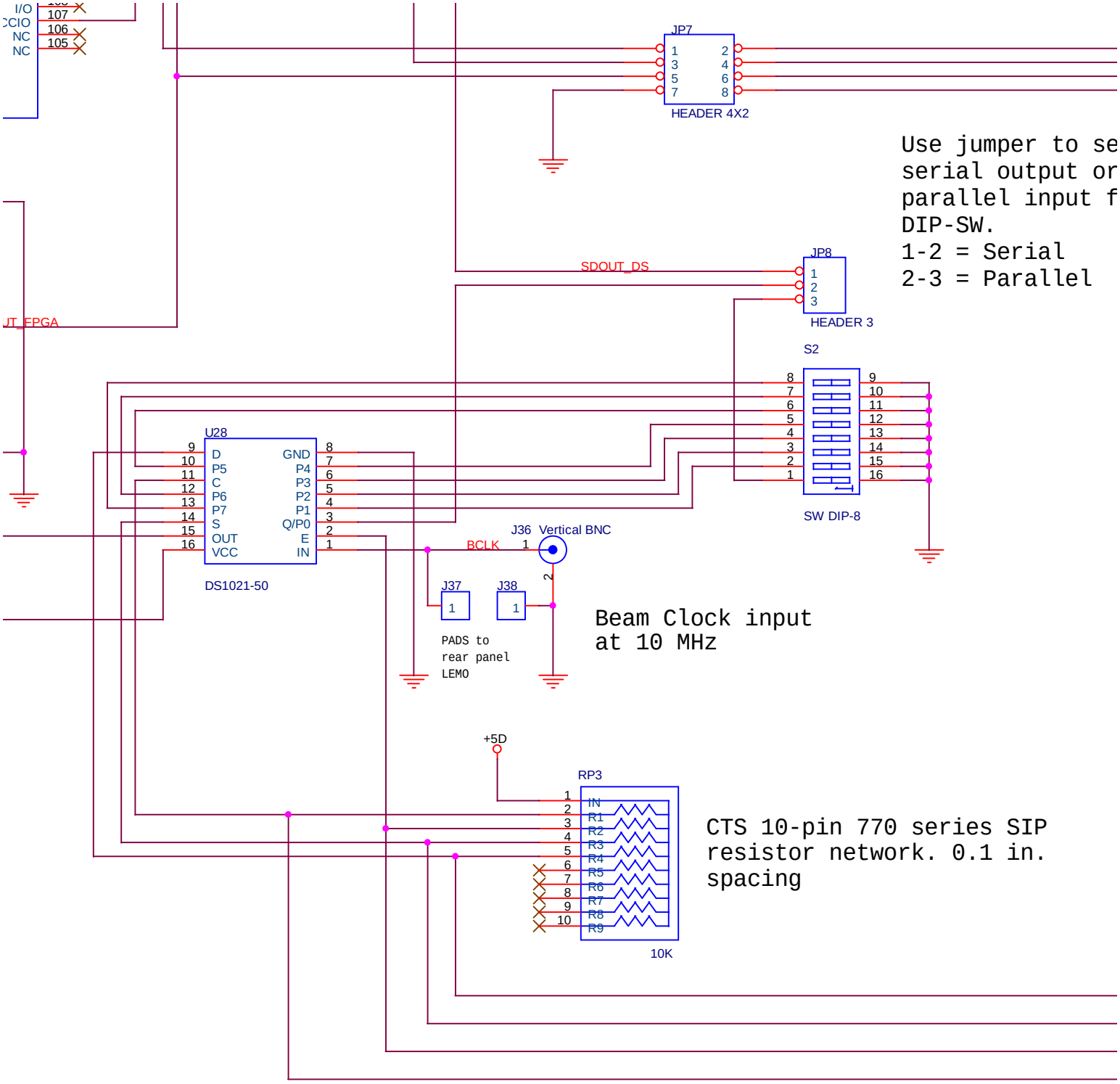

TOLERANCES
UNLESS OTHERWISE SPECIFIED

FRACTIONS
XX DECIMALS
XXX DECIMALS
ANGLES
BREAK SHARP EDGES MAX.
FINISH RMS

DRAWN BY
DRAWING CHECK
ENGINEER
APPROVED
DRAWING APP

FILE DATE	BY	ENGR	APVD
APPROVALS			

C D

select
or
from

PRINTED CIRCUIT BOARD	SKF-1009-2
REFERENCE DRAWINGS	NUMBER

LOCKHEED MARTIN ENERGY RESEARCH CORP.

ORNL INSTRUMENTATION AND CONTROLS DIVISION
Oak Ridge, Tennessee

ROC NIM BOARD

SCHEMATIC

G. S. RAO	4/98
G. S. RAO	4/98
APPROVALS	DATE

PHENIX

FILE DATE	FILE POINT	BLDG	SHT.	OF
	HC-1 EC-1	3500	2	2

SCALE	ID	
NTS	I & C	SKF-1009-1

E

2

1

TYPE

SD

MF

REV

0