Central Magnet

Steel and Coils

Central Magnet power supply

Output Power	900 kW 2000Adc @ 450v
Control Mode	Current control with voltage limit
Input voltage	480 VAC, 60 hz, 3 phase
Rectifier config	12 phase, extended delta
Output voltage ripple	1 %
Long term reproducibility	0.1% (1 year)
Stability (all ambient variations considered)	0.1% (1 min to 1 year)
Remote Control and status	RS 422 Serial Comunications Link

PHENIX CM Steel Assembly - Isometric

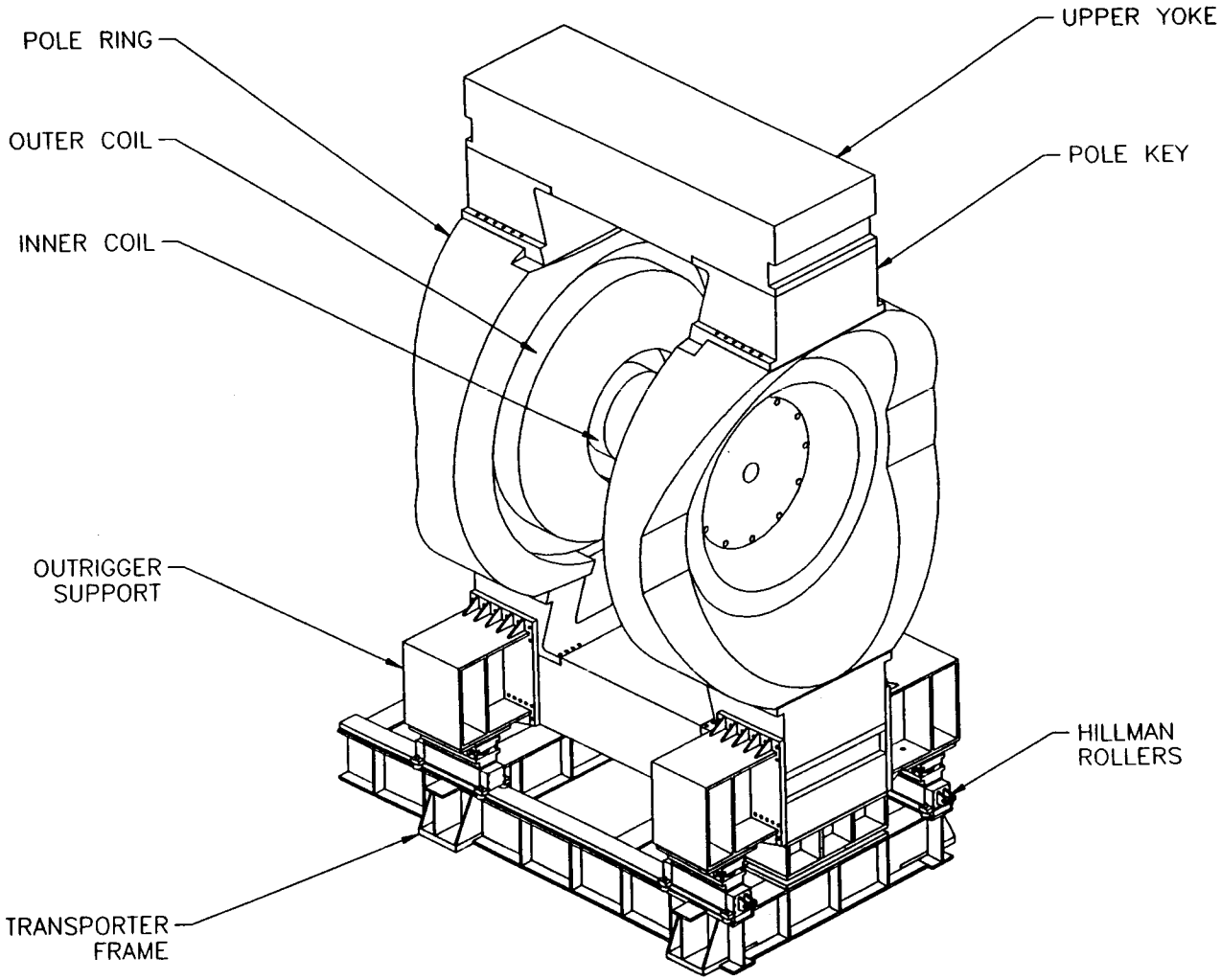

RMY-01
10/20/93

Overall view of Central Magnet system

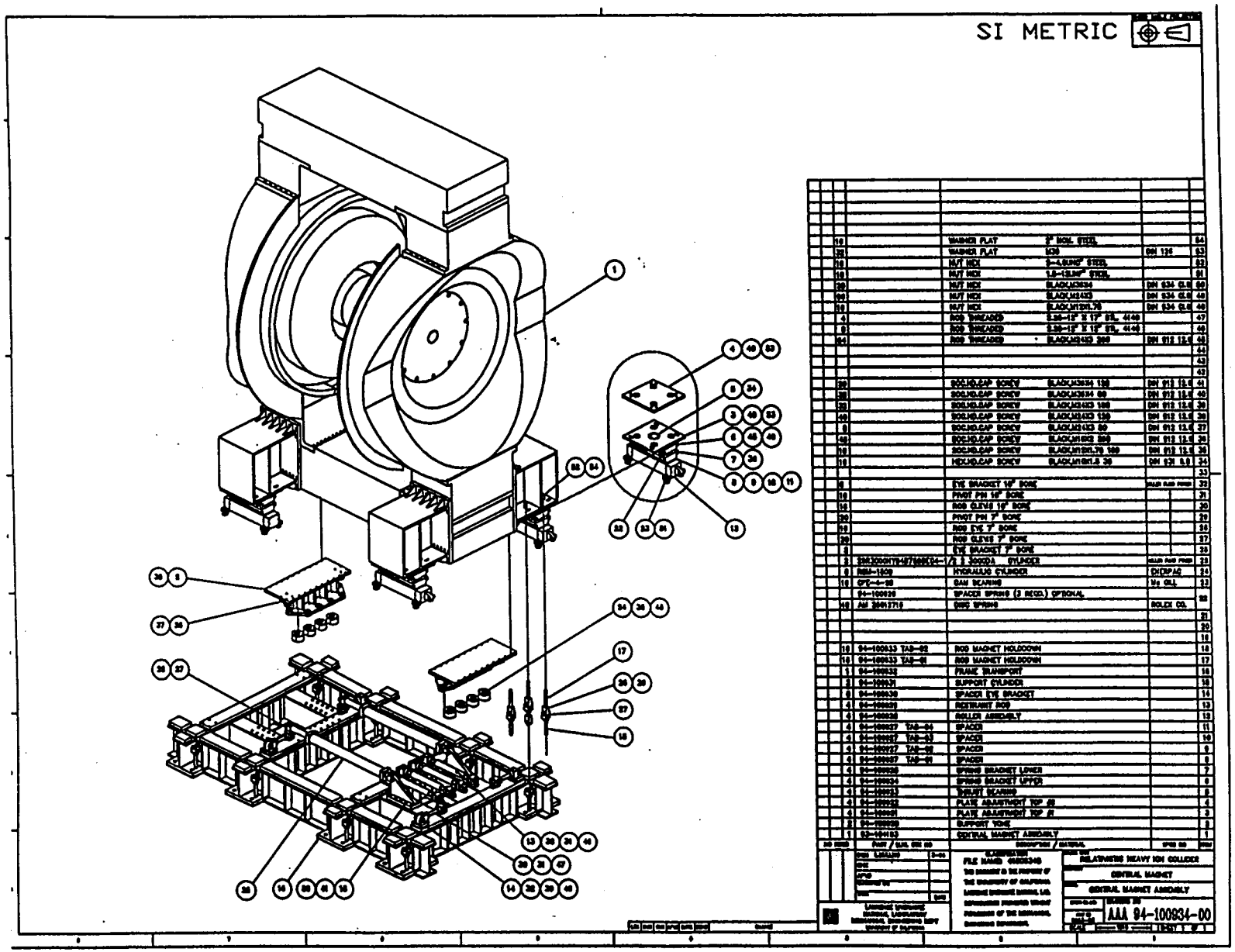

PHENIX Central Magnet - Overview

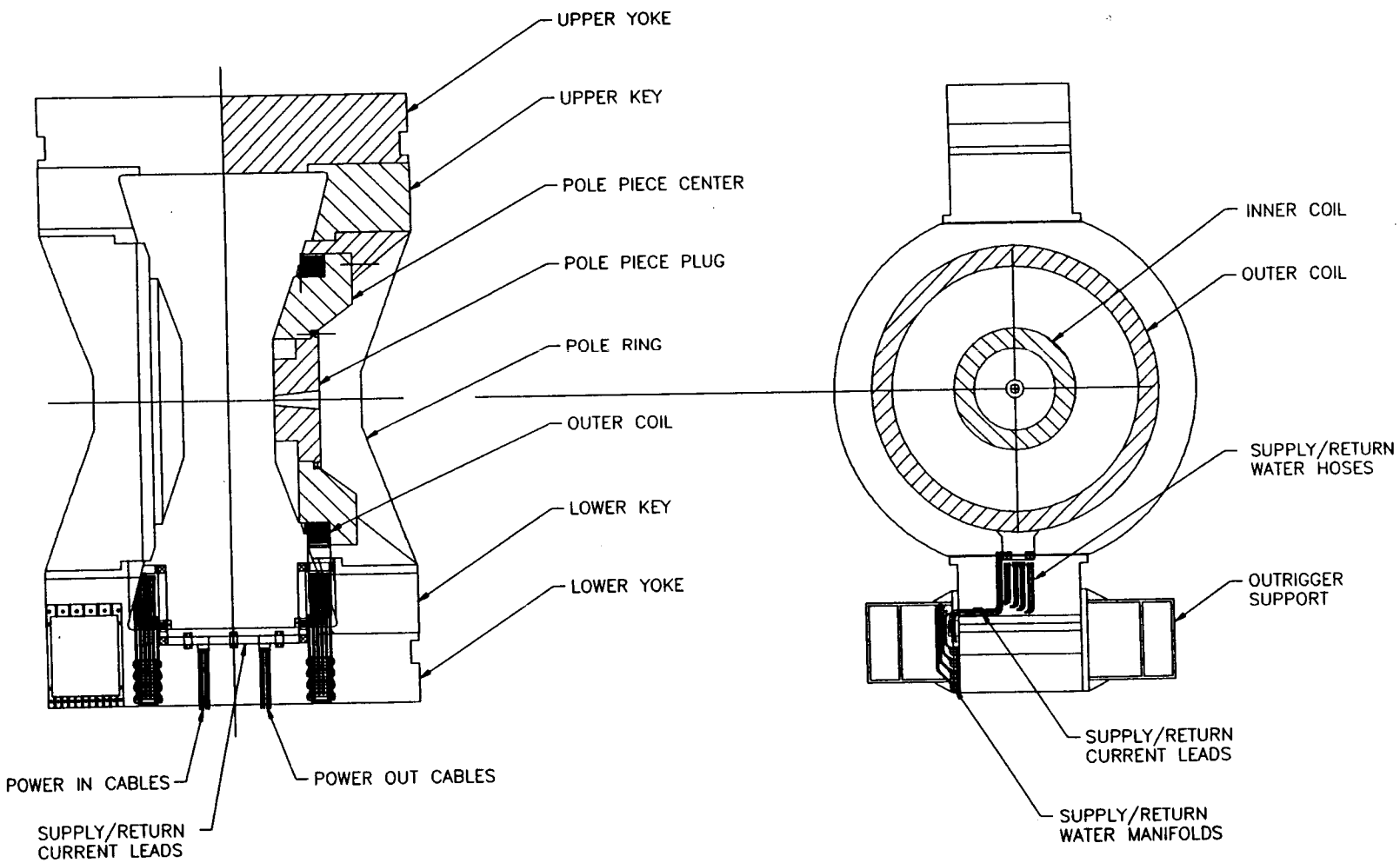

RMY-01
10/20/93

Central magnet exploded view

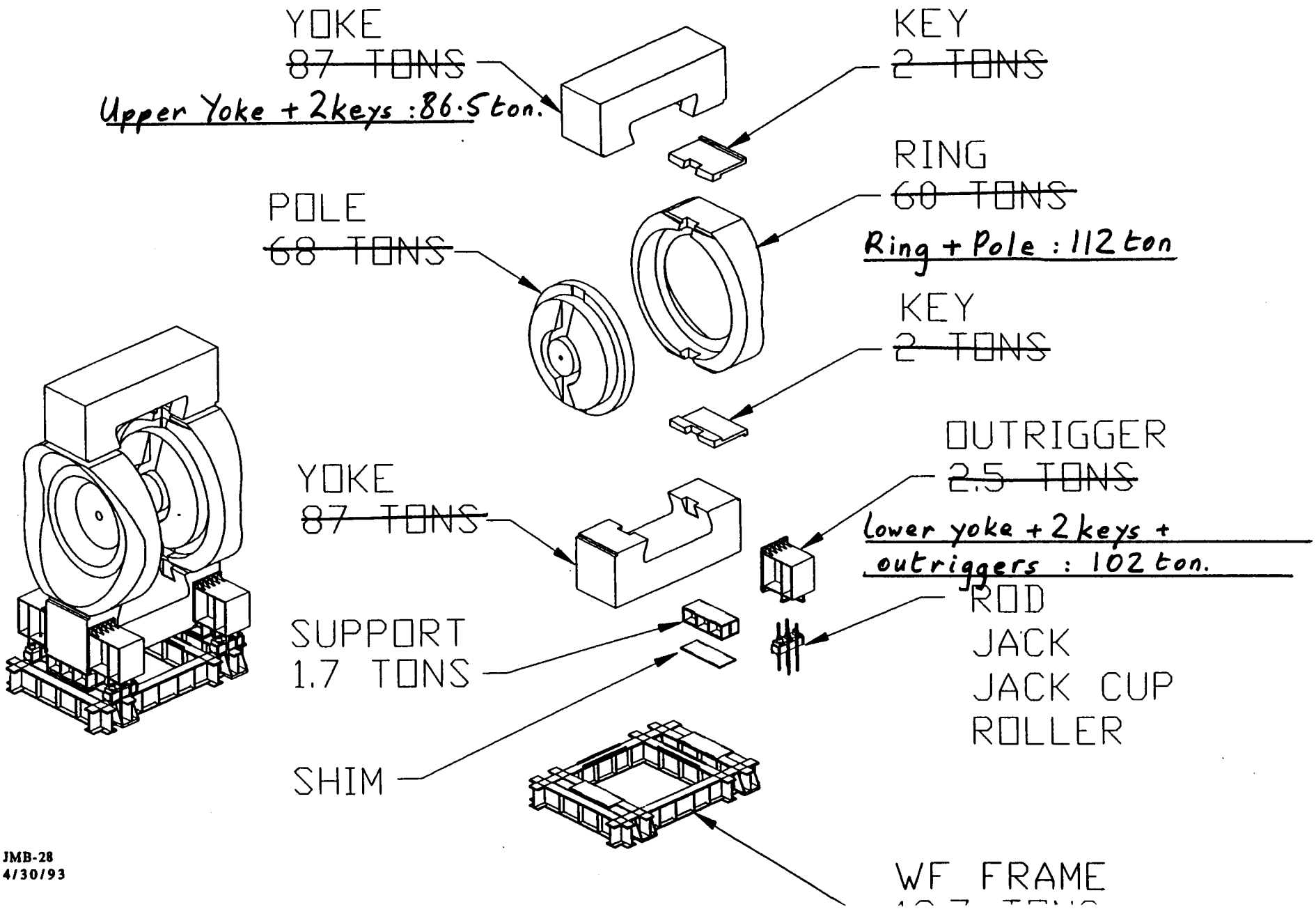

JMB-28
4/30/93

Design description

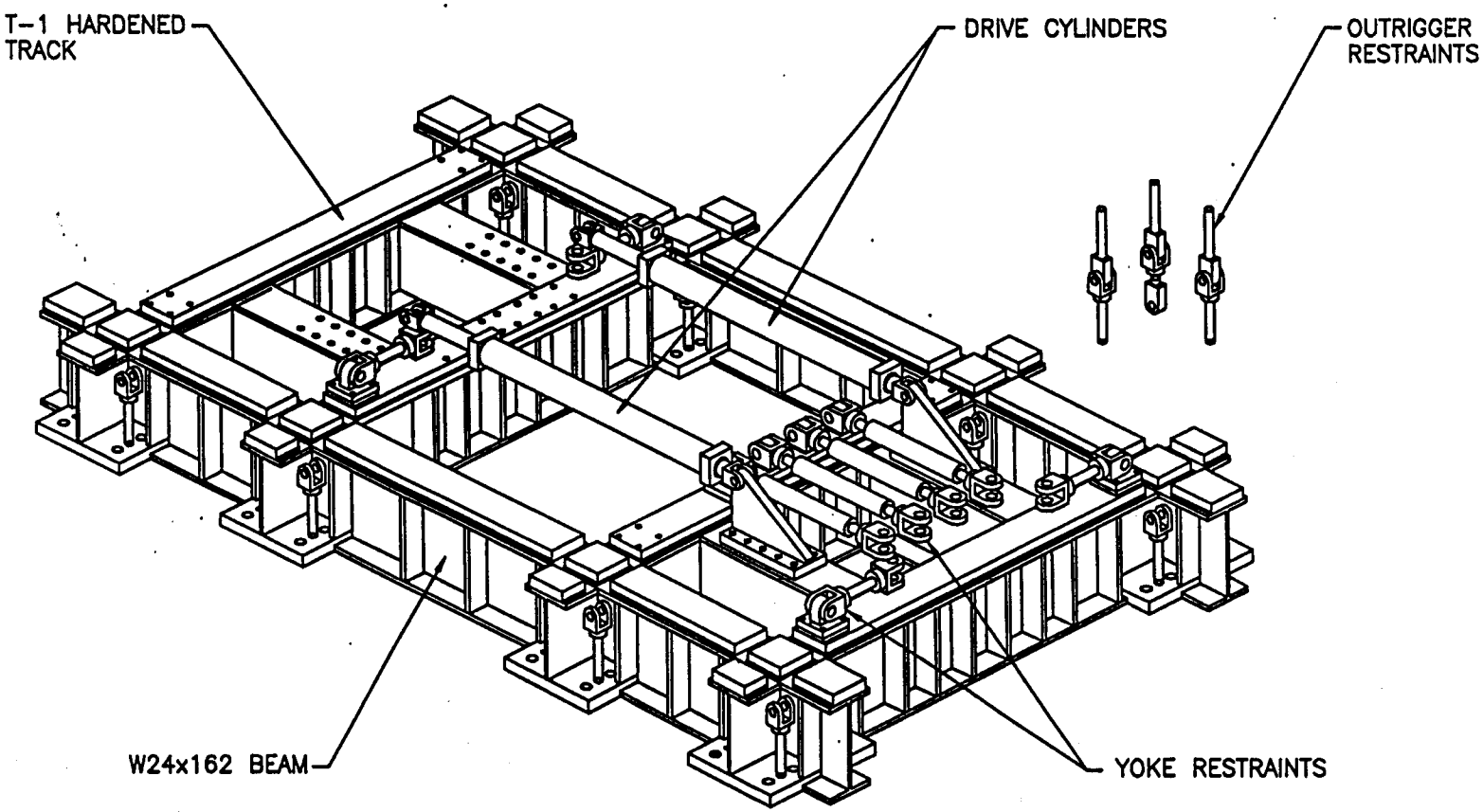

PHENIX Coils - Power Supply Cable Summary

Parameter	CM Outer Coils	CM Inner Coils	MM Coils
Current (amps)	1719	2442	2941
Voltage (volts)	348	134	77
Power (kwatts)	600	328	225

PHENIX Magnet Subsystem - Coil Parameters

	Central Magnet	
	Inner Coils (2)	Outer Coils (2)
Amp-Turns	293,000	247,500
Configuration	6 Dbl. Pancakes	6 Dbl. Pancakes S
Cond Material	Copper	Copper
Inside Dia (m)	1.08	3.20
Outside Dia (m)	1.55	3.73
# of Turns	120	144
Cond Size (mm)	21.5 square	20.3 square
Cond Hole ø (mm)	13.7	12.8
Cond Length (m)	497	1578
Current (amps)	2442	1719
Voltage (volts)	67	174
Power (kwatts)	164	300
Flow rate (gpm)	99.2	43.9
Weight (kg)	1408	4003
Avg Coil Temp °C	23.1	32.8

RMY-01
10/19/93

PHENIX Central Magnet Coils - CDR Update

- CM Outer Coils: No changes.

- CM Inner Coils:
  - comprised of 6 (not 5) bifilar wound double pancakes.
  - all double pancake subassemblies are identical in configuration (not stepped).
  - ampere-turn requirement is 293,000 (vs. 280,000 before).
  - coil is 120 (vs. 150) turn conductor package. (20 turns per double pancake assembly X 6 double pancakes)
  - conductor size is 21.51 mm (vs. 17.8 mm).
  - conductor hole size is 13.66 mm ø (vs. 11.1 mm ø).
  - 12 water circuits per coil (vs. 10).
  - requires 2442 amps @ 67.1 volts (vs. 1867 amps @ 120 volts).
  - flow rate per coil is 99.2 GPM (vs. 30.9 GPM).
  - avg. coil temperature is 23.1°C (vs. 39.0°C).