NOTES

UNLESS OTHERWISE SPECIFIED:

1. ALL DIMENSIONS ARE IN INCHES.
2. DIMENSIONING AND TOLERANCING PER ANSI Y14.5M-1982.
3. SURFACE TEXTURE PER ANSI B46.1-1985.

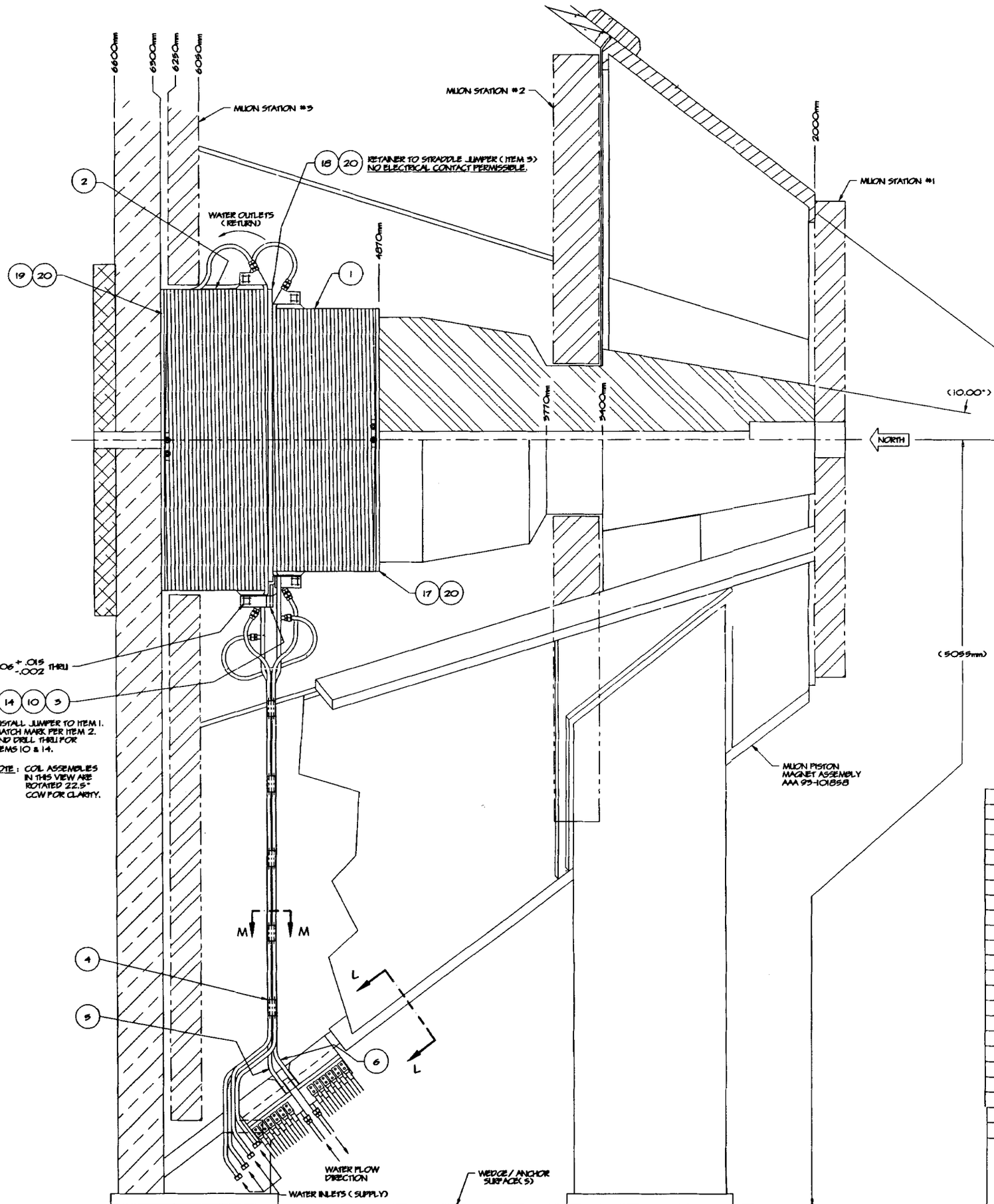

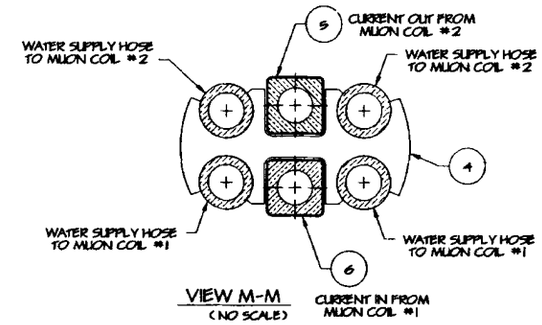

VIEW M-M
(NO SCALE)

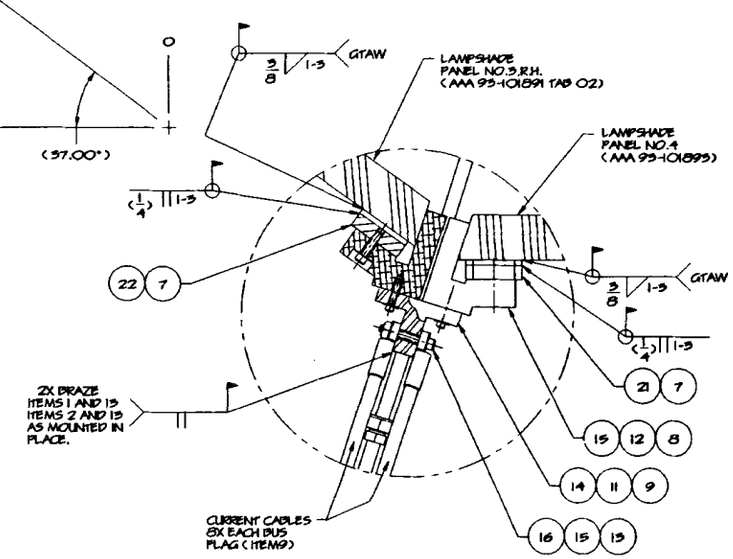

VIEW L-L
(NO SCALE)

NO REQD	PART / LLNL STK NO	DESCRIPTION / MATERIAL	SPEC NO	ITEM
1	93-100917 TAB-02	THREAD PLATE SPACER		22
1	93-100917 TAB-01	THREAD PLATE SPACER		21
69		SCREW, SOC. HD CAP, M12-1.75 X 45mm (CRES)		20
8	93-104211	SPACER, COIL NO. 2		19
7	93-104210	RETAINER, COIL NO. 2		18
8	93-104209	RETAINER, COIL NO. 1		17
8	5310-21799	NUT, PLAIN, HEXAGON, .500-13UN (STL)		16
28	5310-21882	WASHER, ROUND, FLAT, 1/2 SIZE (CRES)		15
16	5310-21881	WASHER, ROUND, FLAT, 3/8 SIZE (CRES)		14
8		SCREW, SOC. HD CAP, .500-13UNC X 3.50"L (STL)		13
12	5305-47658	SCREW, SOC. HD CAP, .500-13UNC X 2"L (CRES)		12
12	5305-47635	SCREW, SOC. HD CAP, .375-16UNC X 1.50"L (CRES)		11
4	5305-41159	SCREW, SOC. HD CAP, .375-24UNF X 1.50"L (CRES)		10
2	93-104196	BUS PLAG		9
2	93-104195	BUS ISOLATOR		8
2	93-104194	THREAD PLATE		7
1	93-104193	POWER BUS - COIL #1		6
1	93-104192	POWER BUS - COIL #2		5
5	93-104191	CLAMP - BUS		4
1	93-104153	COIL JUMPER		3
1	93-101857	COIL #2 ASSEMBLY		2
1	93-104154	COIL #1 ASSEMBLY		1

LTR	DWN	CHK	APVD	DATE	ZONE	CHANGE
B	LM			6/95		ITEM 7,8,9,21&22 REVISED
A	LM			4/95	SH2	22.5° WAS 67.5°, ADDED ITEM-21&22

DWN	W.J.WONG	8/93
CHK	W.J.WONG	8/93
APVD	R.M.YAMAMOTO	8/93
CLASSIFIED BY:		
TITLE		DATE

LAWRENCE LIVERMORE NATIONAL LABORATORY
MECHANICAL ENGINEERING DEPT
UNIVERSITY OF CALIFORNIA

CLASSIFICATION
FILE NAME: 3104155B
UNCLASSIFIED

THIS DOCUMENT IS THE PROPERTY OF THE UNIVERSITY OF CALIFORNIA LAWRENCE LIVERMORE NATIONAL LAB. REPRODUCTION PROHIBITED WITHOUT PERMISSION OF THE MECHANICAL ENGINEERING DEPARTMENT.

MAJOR UNIT: PHENIX
SUBASSY: MUON MAGNET
DETAIL: MUON COIL INSTALLATION
SHOWN ON AAA
ACCT NO 8865-25
DRAWING NO AAA 93-104155-0B
SCALE N.T.S.
SHEET 1 OF 2