Muon Identifier Steel
Final Design Review

June 17, 1994
Brookhaven National Laboratory

Presented by
Marcus Libkind
Lawrence Livermore National Laboratory

Contributors

Joel Bowers
Bob Holmes
Palmer House
Phil Keenan
Jim Thomas
Bob Yamamoto

The Big Question

How can anything so simple as
five steel plates
cause so many headaches?

Overview

Lawrence Livermore National Laboratory

- Installation location in main facility hall
- Design goals, assumptions and specifications
- Steel plates
- Space allocation for steel plates and detectors
- Rod supports
- Base plates and positioning blocks
- Installation
- Estimated cost
- Outstanding issues

Oakridge National Laboratory

- Status report on detectors

MAJOR FACILITY HALL

PLAN VIEW

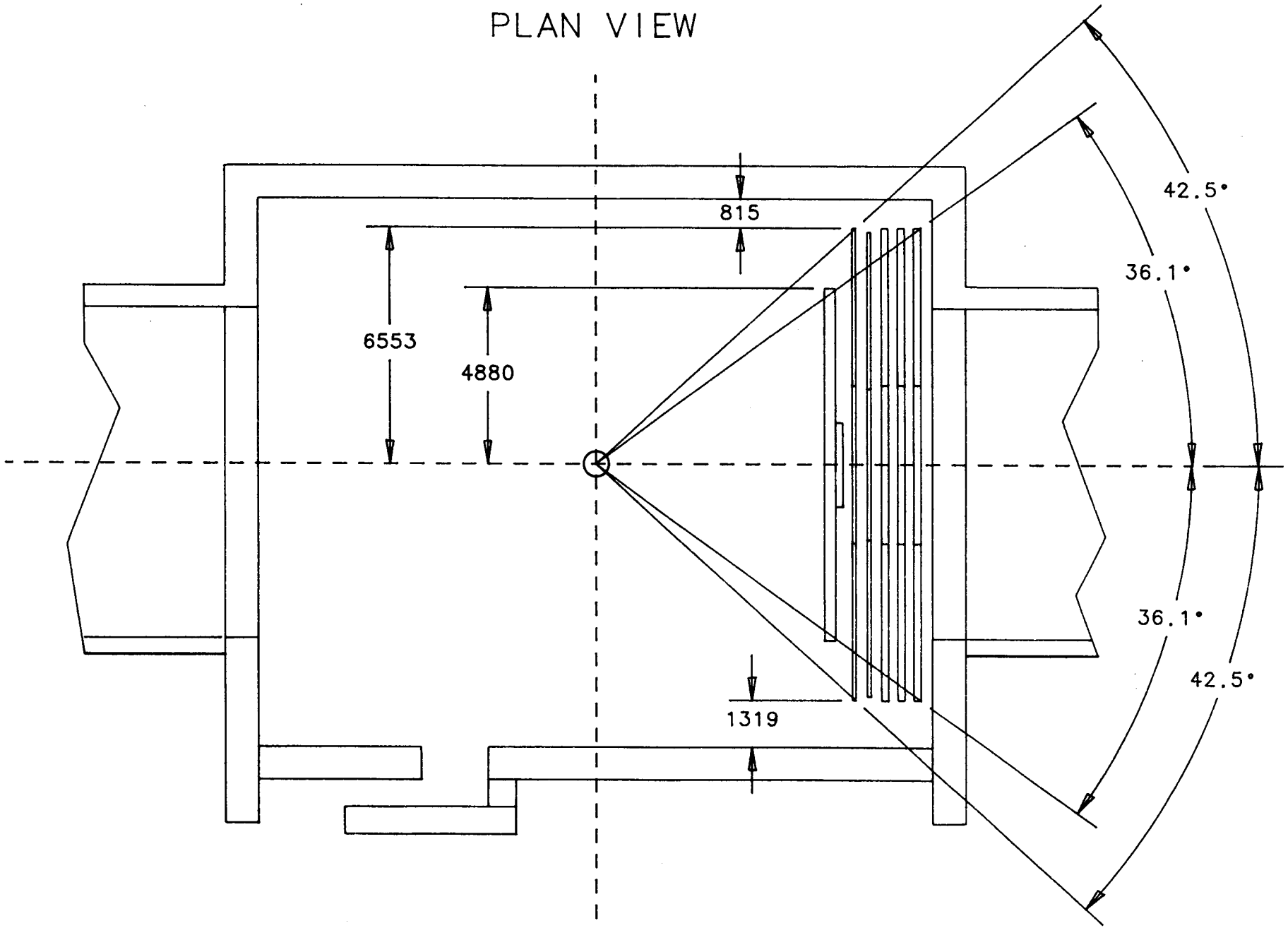

MAJOR FACILITY HALL

ELEVATION VIEW

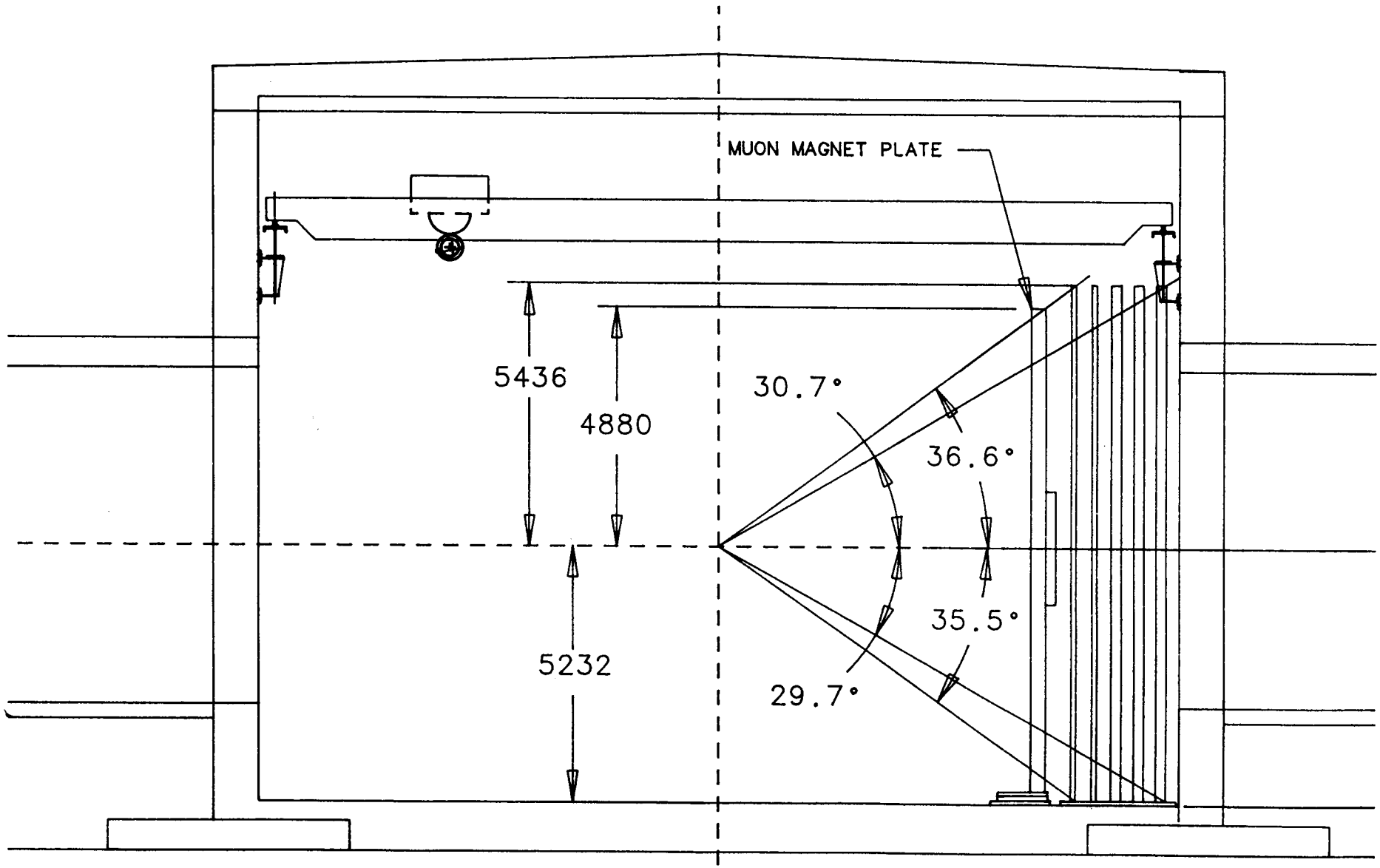

Design Goals

- Meet physics requirements
- Work within limited space
- Minimize cost
  - Simplicity
  - Minimum on-site fabrication
  - Ease of installation
- Design, fabrication and installation prior to finalization of detector design

Assumption

Design based on Russian fabrication

- Machining is not a major expense
- More options with respect to tolerances and inspection at no or minimal increase in cost

Design Specifications

- No written specifications
- Still changing as of June 9, 1994

Muon ID Steel (nominal specifications)

- Five rows of plates; each row consists of three panels
- Rows 1-2 are 100 mm thick; rows 3-5 are 200 mm thick
- Each row is nominally 43 feet wide x 35 feet high
- Each plate is nominally 14.3 feet wide x 35 feet high and weighs 41 tons (100 mm) or 81 tons (200 mm)
- Center panel in each row has square beam tube hole 64.8x64.8 inches (1646x1646 mm)
- Gap between adjacent plates in same row is nominally 1 inch (not to exceed 3 inches)

- Adjacent plates in same row connected at top by welded bar
- Spacer between adjacent plates in same row at bottom
- Steel composition not critical; Russians to provide specification for least expensive steel
- Steel density variation & void size to be specified by Russians & reviewed by ORNL

Special #2 Row

- Center plate in row #2 is 200 mm narrower (100 mm each side of beam tube opening) than all other center plates

- Side plates are standard

- Net results
  - Row #2 is 200 mm narrower overall
  - Gaps between panels in row #2 are at transverse (x-axis) absolute values less than row #1

Reduced Heights

Muon ID plates and detectors
extend under crane supports, therefore:

- Plate #5 is notched
- Detectors #5 and #6 must be shorter

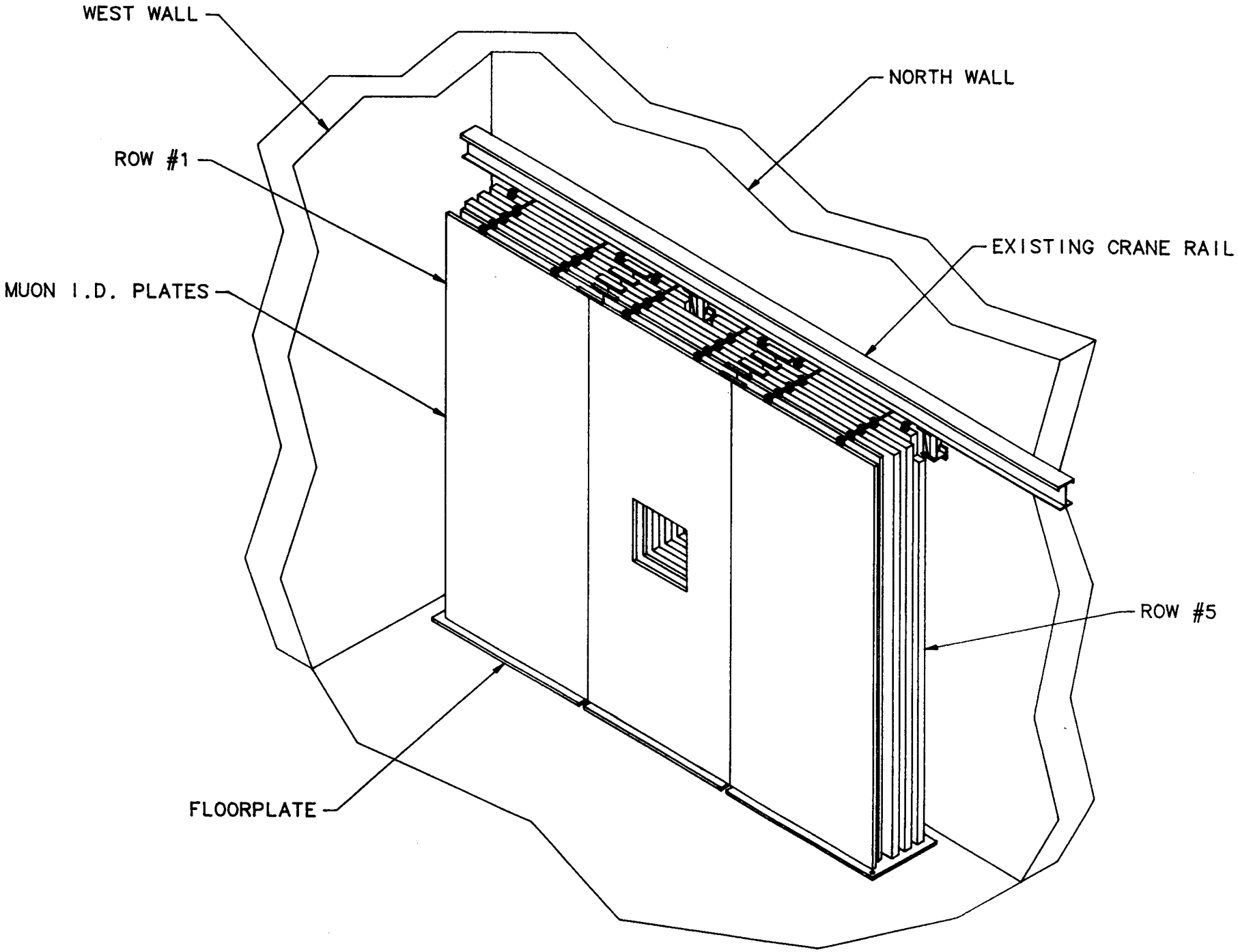
WEST WALL
NORTH WALL
ROW #1
EXISTING CRANE RAIL
MUON I.D. PLATES
ROW #5
FLOORPLATE

Safety Factors

Designed for 0.525 g

For Rare Events

Minimum SF = 1.0 on Yield

or

Minimum SF = 1.25 on Ultimate

Connecting Bars at Top of Plates

- Nominal dimensions 3x2x24 inches (rows 1-2) and 7x2x24 inches (rows 3-5)
- Fabricated on-site

Spacers at Bottom of Plates

- Helps distribute seismic loads between plates
- Height is 4 inches
- Fabricated on-site

Rod Supports

- All muon ID plates held at top to wall using two rod supports

- Two cases:
  - Rows 1-4 share common rod supports; connected to wall with adjustable plate assembly
  - Row 5 connected to wall with separate rod supports
- Rod supports are 1.500-6 (rows 1-4) and 1.250-7 (row 5) alloy steel continuous threaded rods (minimum tensile strength 125,000 psi)

- Sleeve placed over 1.500-6 rod section closest to wall to prevent buckling

Muon ID Plate Notch

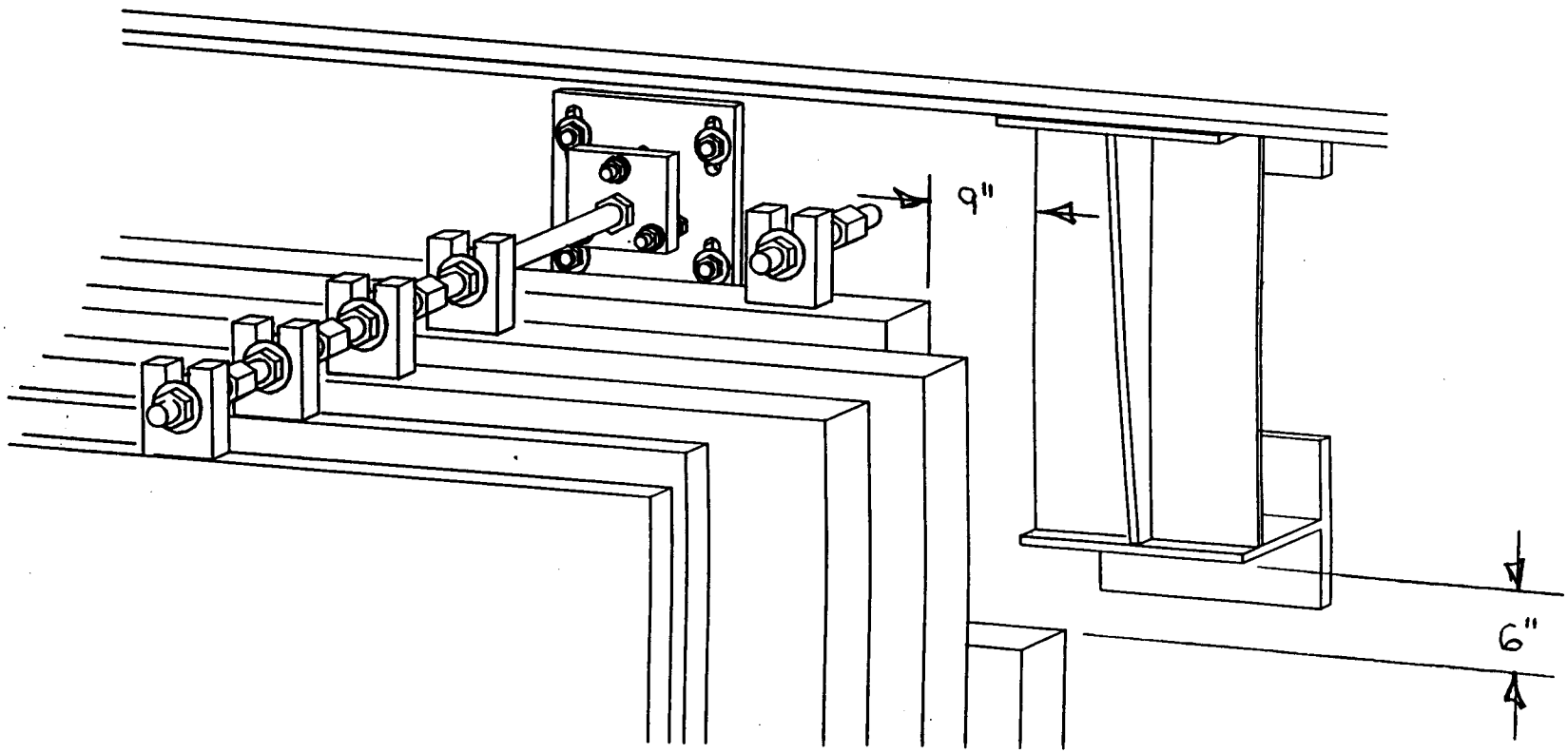

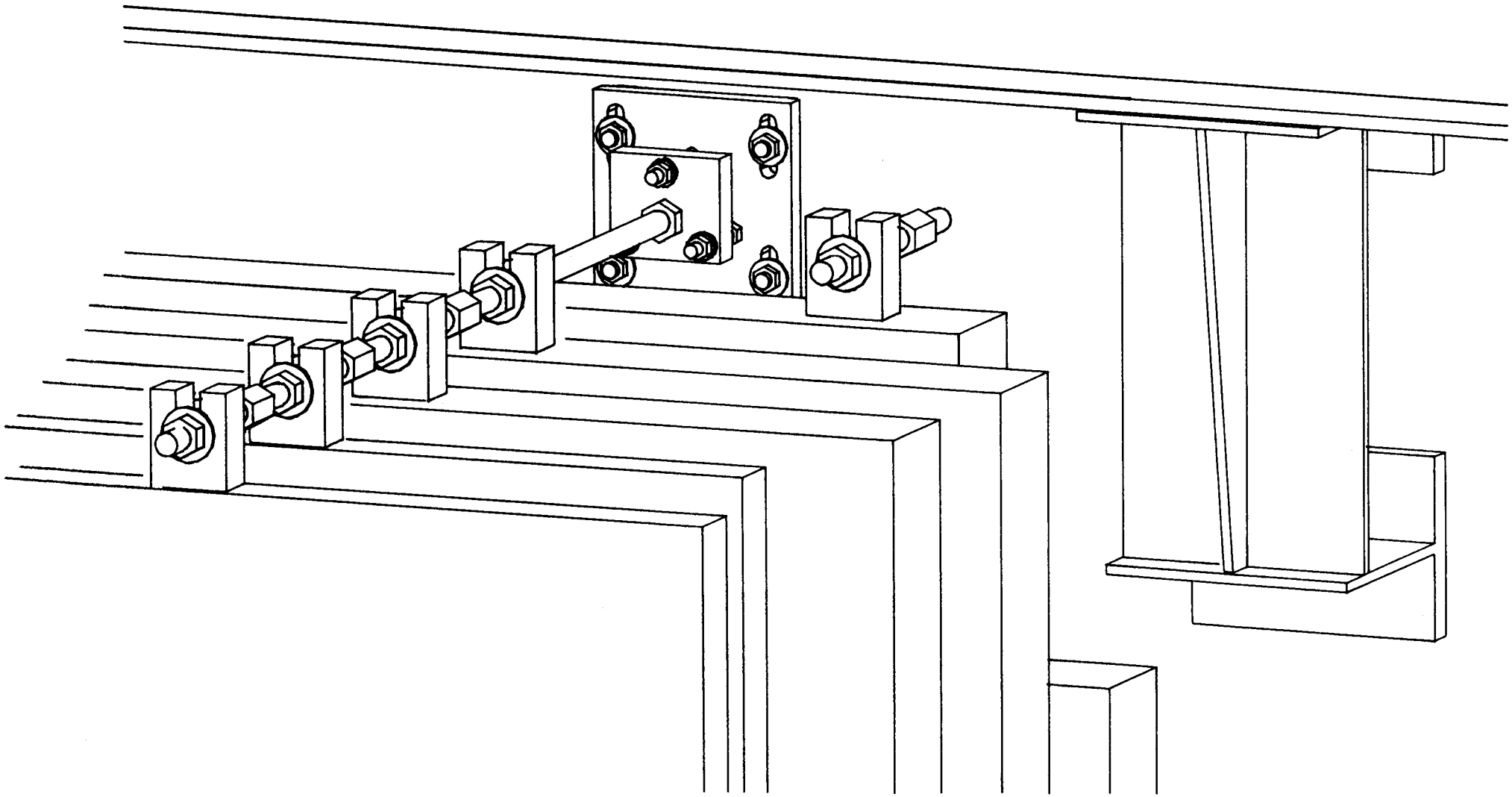

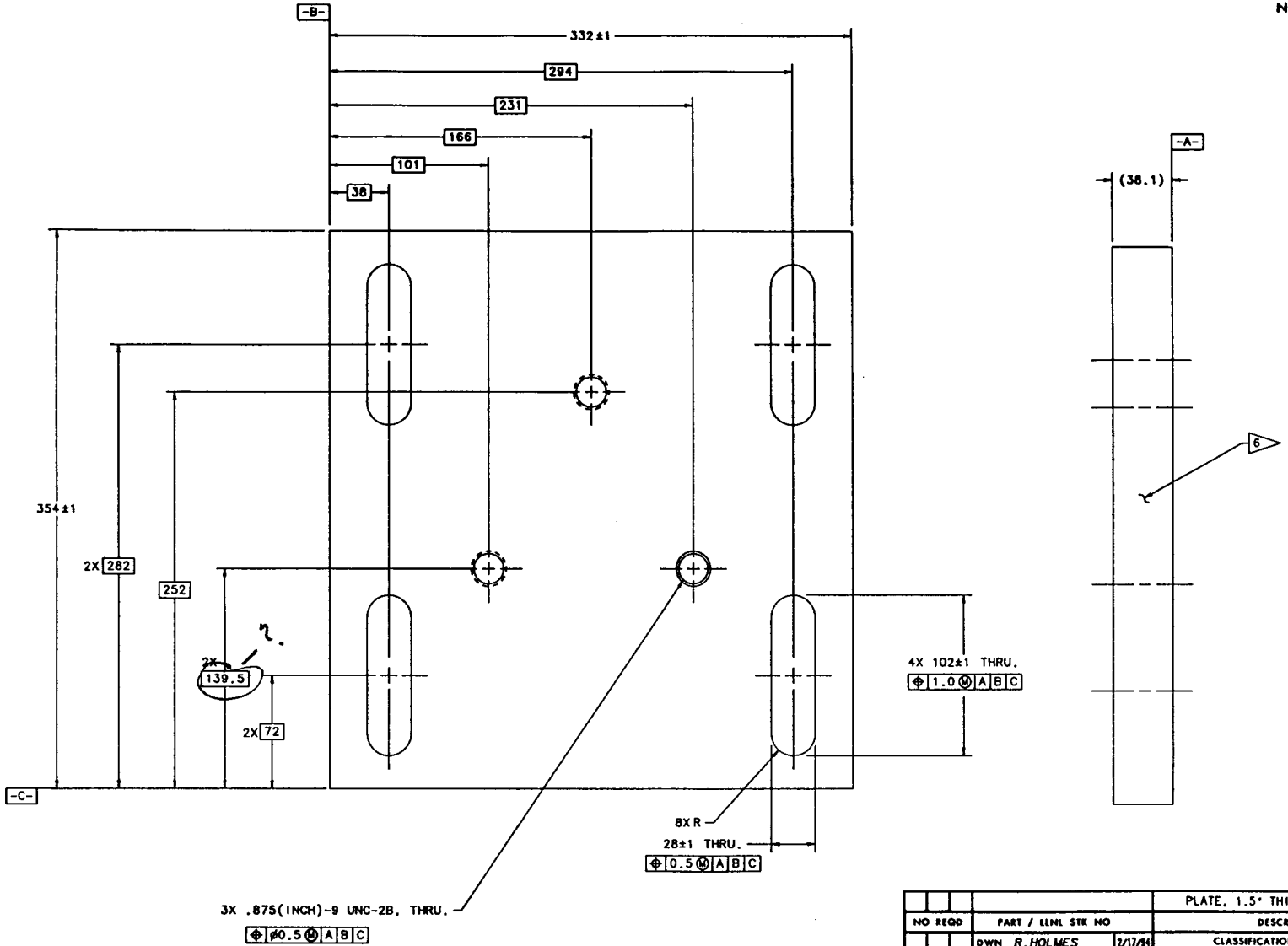

NOTES
UNLESS OTHERWISE SPECIFIED:

1. ALL DIMENSIONS ARE IN ~~INCHES.~~ MM
2. DIMENSIONING AND TOLERANCING PER ANSI Y14.5M-1982.
3. SURFACE TEXTURE PER ANSI B46.1-1978.
4. 3.2 ALL MACHINED SURFACES.
5. BREAK SHARP EDGES, CHAM. OR R 1 TO 2MM
6. SCRIBE OR STAMP DRAWING NUMBER AND REVISION LETTER APPROXIMATELY WHERE SHOWN IN 10 MM HIGH CHARACTERS.
7. BLACK OXIDE PER MIL-C-13924A CLASS 1

NO REQD	PART / LLNL STK NO	DESCRIPTION / MATERIAL	SPEC NO	ITEM
		PLATE, 1.5" THICK, STEEL, 4130 H.R. ANNEALED	UNS G41300	

DWN R. HOLMES	2/17/94	
CHK		
APVD		
CLASSIFIED BY:		
TITLE	DATE	

LAWRENCE LIVERMORE NATIONAL LABORATORY
MECHANICAL ENGINEERING DEPT
UNIVERSITY OF CALIFORNIA

CLASSIFICATION

THIS DOCUMENT IS THE PROPERTY OF THE UNIVERSITY OF CALIFORNIA LAWRENCE LIVERMORE LABORATORY. PRODUCTION PROHIBITED WITHOUT PERMISSION OF THE MECHANICAL ENGINEERING DEPARTMENT.

MAJOR UNIT: RELATIVISTIC HEAVY ION COLLIDER (RHIC)
SUBASSY: PHENIX MUON PISTON MAGNET
DETAIL: PLATE NO.2, ROD MOUNTING
SHOWN ON AAA: 94-101060
ACCT NO: 8863-25
DRAWING NO: AAA94-101070-00
SCALE: NONE
SHEET 1 OF 1

LTR	DWN	CHK	APVD	DATE	ZONE	CHANGE

NOTES
UNLESS OTHERWISE SPECIFIED:

1. ALL DIMENSIONS ARE IN ~~INCHES~~ MM
2. DIMENSIONING AND TOLERANCING PER ANSI Y14.5M-1982.
3. SURFACE TEXTURE PER ANSI B46.1-1978.
4. 3.2 ALL MACHINED SURFACES.
5. BREAK SHARP EDGES, CHAM. OR R 1 TO 2MM
6. SCRIBE OR STAMP DRAWING NUMBER AND REVISION LETTER APPROXIMATELY WHERE SHOWN IN 10 MM HIGH CHARACTERS.
7. BLACK OXIDE PER MIL-C-13924A CLASS 1

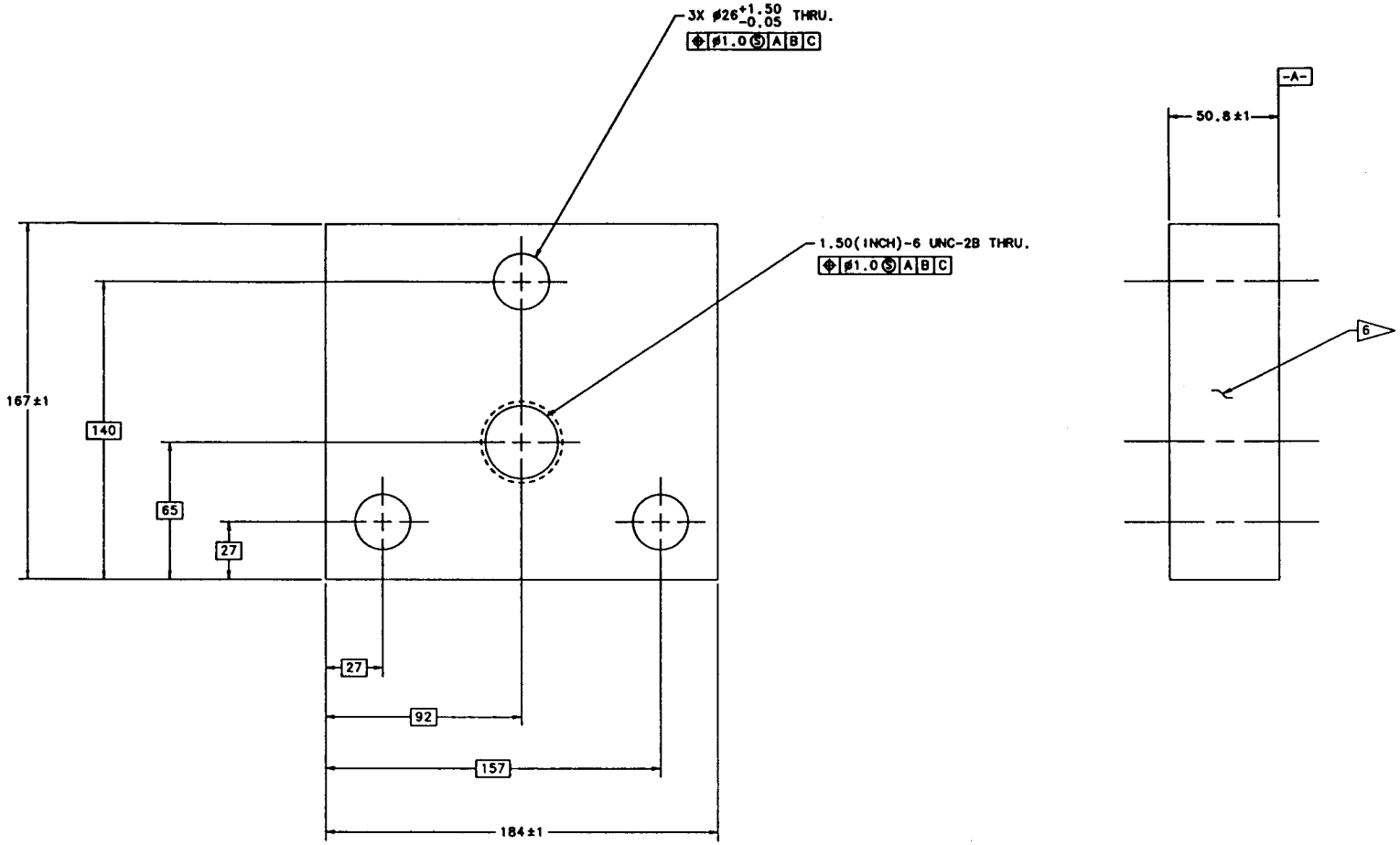

NO REQD	PART / LLNL STK NO	DESCRIPTION / MATERIAL	SPEC NO	ITEM
		STEEL, 4130 H.R. ANNEALED	UNS G41300	

DWN R.HOLMES	2/17/94	
CHK		
APVD		
CLASSIFIED BY:		
TITLE	DATE	

LAWRENCE LIVERMORE NATIONAL LABORATORY
MECHANICAL ENGINEERING DEPT
UNIVERSITY OF CALIFORNIA

CLASSIFICATION

THIS DOCUMENT IS THE PROPERTY OF THE UNIVERSITY OF CALIFORNIA LAWRENCE LIVERMORE LABORATORY. PRODUCTION PROHIBITED WITHOUT PERMISSION OF THE MECHANICAL ENGINEERING DEPARTMENT.

MAJOR UNIT: RELATIVISTIC HEAVY ION COLLIDER (RHIC)
SUBASSY: PHENIX MUON PISTON MAGNET
DETAIL: PLATE NO.1, ROD MOUNTING
SHOWN ON AAA 94-101060
ACCT NO 8863-25
DRAWING NO AAA94-101069-00
SCALE NONE
SHEET 1 OF 1

LTR	DWN	CHK	APVD	DATE	ZONE	CHANGE

NOTES
UNLESS OTHERWISE SPECIFIED:

1. ALL DIMENSIONS ARE IN ~~INCHES.~~ MM
2. DIMENSIONING AND TOLERANCING PER ANSI Y14.5M-1982.
3. SURFACE TEXTURE PER ANSI B46.1-1978.
4. 3.2 ALL MACHINED SURFACES.
5. BREAK SHARP EDGES, CHAM. OR R 1 TO 2MM
6. SCRIBE OR STAMP DRAWING NUMBER AND REVISION LETTER APPROXIMATELY WHERE SHOWN IN 10 MM HIGH CHARACTERS.

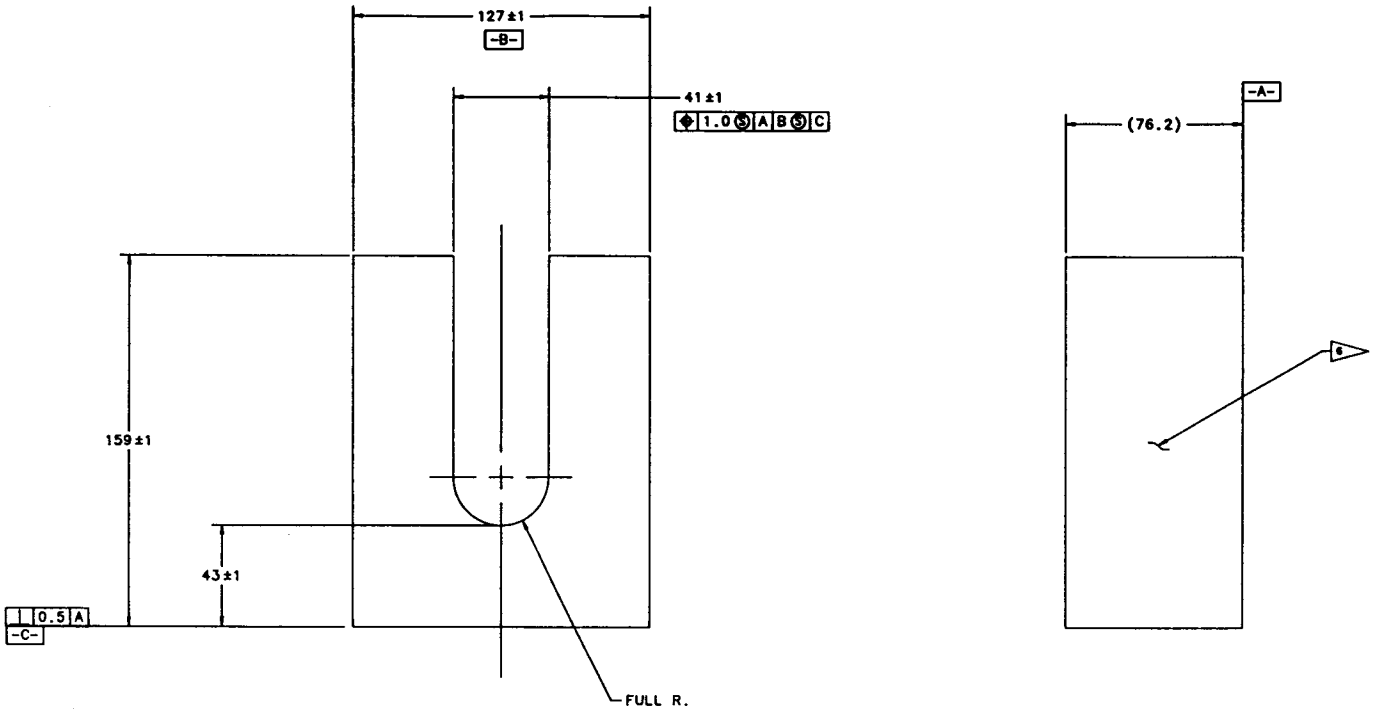

NO REQD	PART / LLNL STK NO	PLATE OR BAR, 3(INCH) THICK, 1020 STEEL		
		DESCRIPTION / MATERIAL	SPEC NO	ITEM

DWN R. HOLMES 9/14/93
CHK
APVD
CLASSIFIED BY:
TITLE DATE

LAWRENCE LIVERMORE NATIONAL LABORATORY
MECHANICAL ENGINEERING DEPT
UNIVERSITY OF CALIFORNIA

CLASSIFICATION
THIS DOCUMENT IS THE PROPERTY OF THE UNIVERSITY OF CALIFORNIA LAWRENCE LIVERMORE LABORATORY. PRODUCTION PROHIBITED WITHOUT PERMISSION OF THE MECHANICAL ENGINEERING DEPARTMENT.

MAJOR UNIT: RELATIVISTIC HEAVY ION COLLIDER (RHIC)
SUBASSY: PHENIX MUON PISTON MAGNET
DETAIL: LUG, ROD MOUNTING
SHOWN ON AAA: 94-101060
ACCT NO: 8863-25
DRAWING NO: AAA94-101067-00
SCALE: NONE
SHEET 1 OF 1

LTR	DWN	CHK	APVD	DATE	ZONE	CHANGE

The Hilti HVA Adhesive Anchor System

Product Details

HEA adhesive capsule

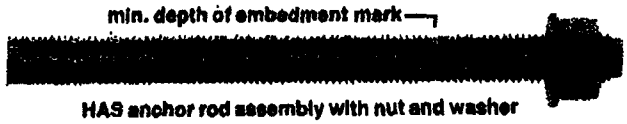

HAS anchor rod assembly with nut and washer

HFA insert

The HVA anchor system has two components, each sold separately; the HEA capsule and HAS rod, or HEA capsule and HFA insert.

Advantages

Anchor fastening does not exert expansion pressure
High loading capacity
Good performance under dynamic load
Easy to use, self-contained adhesive capsule
Fast cure time

Material

Standard HAS rod material meets the requirements of ASTM A36
High strength or 'Super HAS' rod material meets the requirements of ASTM A193, Grade B7
Stainless HAS rod material meets the requirements of ASTM F593 (AISI 304)
HAS Standard Nut — ASTM A563, Grade A
HAS Super Nut — ASTM A563, Grade DH
HAS Stainless Steel Nut — ASTM F594
HAS Standard Washer — ANSI B18.22.1 (1965) Type A Plain
HAS Super Washer — ASTM F436
HAS Stainless Steel Washer — ANSI B18.22.1 (1965) Type A Plain
All standard HAS and HAS Super Rods (except 7/8), HFA inserts, nuts and washers are plated to ASTM B633 SC1.
7/8" hot dipped galvanized in accordance with ASTM A153-78.
HEA Adhesive — Vinylester Resin with a Dibenzoyl Peroxide Hardener

Mechanical Properties		
Anchor	Yield (KSI)	UTS (KSI)
HAS Std. 3/8"-1 1/4"	36	60
HAS-Super 3/8"-1 1/4"	105	125
HAS-SS 3/8-5/8	65	100-150
HAS-SS 3/4	45	85-140
HFA 3/8 & 1/2	63	78
HFA 5/8 & 3/4	58	71

HEA Cartridge Volumes	
Size	Volume (cu. in.)
HEA 3/8"	0.33
HEA 1/2"	0.57
HEA 5/8"	1.21
HEA 3/4"	2.53
HEA 7/8"	2.92
HEA 1"	3.73
HEA 1 1/4"	15.26

Hilti HVA Adhesive Anchor System continued

Specification Table

HAS Anchor Rod

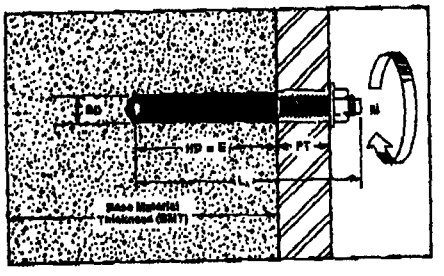

Details	Anchor size	HAS ⅜"	HAS ½"	HAS ⅝"	HAS ¾"	HAS ⅞"	HAS 1"	HAS 1¼"
BD	bit diameter (inches)	15/32	9/16	11/16	⅞	1	1⅛	1½
HD = E	min. depth of embedment = capsule length (inches)	3½	4¼	5	6⅝	6⅝	8¼	12
PT	max. thickness fastened (inches)	1	1½	1¾	2	2¼	2½	2¾
L_A	anchor length (inches)	5⅛	6½	7⅝	9⅝	10	12	16
Tensile Stress Area (in²)		0.078	0.142	0.226	0.334	0.462	0.606	0.969
M max. tightening torque (ft. lbs.)	HAS S.S.	18	30	75	150	175	235	400
	HAS Std. HAS-Super	18	35	80	160	200	330	550
Drill bit size		TE-C+ 15/32-12	TE-C+ 9/16-12	TE-C+ 11/16-12	TE-FY ⅞-13	TE-FY 1-18	TE-FY 1⅛-17	TE-FY 1⅜-23
BMT	min. base material thickness (inches)	5½	6¼	7⅛	8½	8½	10½	15

HFA Insert

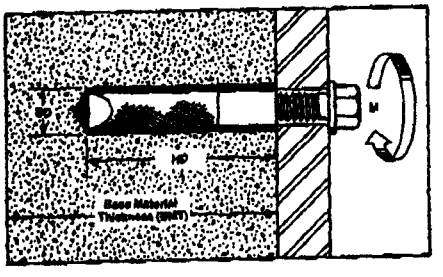

Details[1]	Anchor size	HFA ⅝"	HFA ¾"	HFA ⅞"	HFA 1"
BD	bit diameter (inches)	⅝	11/16	1	1⅛
HD =	min. depth of embedment = capsule length (inches)	3½	4¼	5	6⅝
Useable Thread Length (inches)		1½	1½	2 1/16	2½
M =	max. tightening torque (ft. lbs.)	18	35	80	160
Drill bit size		TE-C+ ⅝-12	TE-C+ 11/16-12	TE-FY 1-13	TE-FY 1⅛-17
BMT	min. base material thickness (inches)	5½	6¼	7⅛	8½

NOTE: 1. This information does not pertain to special order HFA anchors.

Anchor Spacing and Edge Distance Guidelines (HAS Rod and HFA Insert)

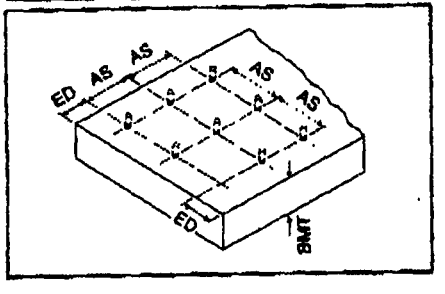

Details	Anchor size	HVA ⅜"	HVA ½"	HVA ⅝"	HVA ¾"	HVA ⅞"	HVA 1"	HVA 1¼"
AS_{cr}	spacing required to obtain maximum working load (inches)	3½	4¼	5	6⅝	6⅝	8¼	12
AS_{min}	Minimum allowable spacing between anchors (inches) Refer to note 1	1¾	2⅛	2½	3¼	3¼	4⅛	6
ED_{cr}	Edge distance required to obtain maximum working load (inches)	5¼	6⅜	7½	10	10	12⅜	18
ED_{min}	Minimum allowable edge distance (inches) Refer to notes 2 and 3	1¾	2⅛	2½	3¼	3¼	4⅛	6

NOTES: 1. When using AS_{min} reduce the working load by 30%.
2. When using ED_{min} and the load is a shear load, reduce the working load by 50%.
3. When using ED_{min} and the load is a tensile load, reduce the working load by 40%.

The HVA Anchor Spacings and Edge Distances for the embedment depths listed above were calculated using the following information:

	Anchor Spacing Tension And Shear			Edge Distance Shear Load Only			Edge Distance Tension Load Only		
	AS_{cr}	AS_{min}	f_{AS}	ED_{cr}	ED_{min}	f_{ED}	ED_{cr}	ED_{min}	f_{ED}
HVA	1.0E	0.5E	0.7	1.5E	0.5E	0.5	1.5E	0.5E	0.6

1. Use linear interpolation between critical and minimum. AS or ED to determine load factor.

Hilti HVA Adhesive Anchor System continued

HVA Allowable Bond Strength and Steel Strength for HAS Rods[2]

Anchor Diameter (in.)	Embed. Depth (in.)	Adhesive Capsule(s) Required	HEA Tensile Bond Strength (lbs) 2000 psi Conc.	3000 psi Conc.	4000 psi Conc.	6000 psi Conc.	Steel Strength (lbs) HAS Std. [1]Tensile	HAS Std. [4]Shear	HAS Super [1]Tensile	HAS Super [4]Shear	HAS SS (304 SS) [1]Tensile	HAS SS (304 SS) [4]Shear
3/8	3 1/2	1 - 3/8 x 3 1/2	2010	2210	2420	2630	1560	1070	3250	1900	2600	1850
	5 1/4	2 - 3/8 x 3 1/2	3010	3320	3630	4250						
	7	2 - 3/8 x 3 1/2	4010	4425	4840	5665						
1/2	4 1/4	1 - 1/2 x 4 1/4	2660	2990	3330	3990	2640	2090	5920	3270	4730	3600
	6 3/8	1 - 1/2 x 4 1/4 & 1 - 3/8 x 3 1/2	4000	4490	4990	5980						
	8 1/2	2 - 1/2 x 4 1/4	5330	5990	6650	7970						
5/8	5	1 - 5/8 x 5	4120	4590	5070	6020	4520	3000	9420	5632	7530	5060
	7 1/2	1 - 5/8 x 5 & 1 - 1/2 x 4 1/4	6180	6890	7600	9030						
	10	2 - 5/8 x 5	8240	9190	10140	12040						
3/4	6 5/8	1 - 3/4 x 6 5/8	5750	6510	7260	8770	6680	4800	13920	7850	9460	7270
	10	1 - 3/4 x 6 5/8 & 1 - 1/2 x 4 1/4	8630	9780	10890	13150						
	13 1/4	2 - 3/4 x 6 5/8	11510	13020	14520	17530						
7/8	6 5/8	1 - 7/8 x 6 5/8	6770	7660	8550	10320	9240	6850	19250	10760	(3)	(3)
	10	2 - 3/4 x 6 5/8	10160	11490	12820	15490						
	13 1/4	2 - 7/8 x 6 5/8	13540	15320	17090	20650						
1	8 1/4	1 - 1 x 8 1/4	9540	10960	12290	14930	12120	7630	25250	13760	(3)	(3)
	12 3/8	2 - 7/8 x 6 5/8	14460	16450	18430	22390						
	16 1/2	2 - 1 x 8 1/4	19280	21930	24570	29860						
1 1/4	12	1 - 1 1/4 x 12	20510	23220	25940	31370	19380	13070	40875	21530	(3)	(3)
	15	1 - 1 1/4 x 12 & 1 - 1 x 8 1/4	24935	27535	30140	35340						
	18	1 - 1 1/4 x 12 & 2 - 1 x 8 1/4	29360	31850	34340	39310						

1. Allowable tensile load for anchor rods is based upon allowable stress = .33 Fu (ultimate tensile strength) acting upon the tensile stress area of the rods. Reference AISC Steel Manual Section 1.5
2. Use lower value of either bond or steel strength for tensile load.
3. 7/8-1 1/4 HAS SS only available through special order, no test data available.
4. Values obtained from test data at min. embedment.

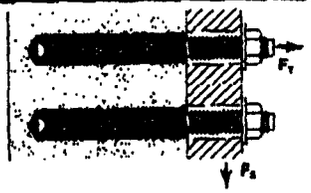

HVA Ultimate Bond Strength and Steel Strength for HAS Rods[2]

Anchor Diameter (in.)	Embed. Depth (in.)	Adhesive Capsule(s) Required	HEA Tensile Bond Strength (lbs) Concrete Strength 2000 psi	3000 psi	4000 psi	6000 psi	Steel Strength (lbs)[1] HAS Std. Yield Strength	HAS Std. Tensile Strength	HAS Std. [4]Shear Strength	HAS Super Yield Strength	HAS Super Tensile Strength	HAS Super [4]Shear Strength	HAS SS (303 SS) Yield Strength	HAS SS (303 SS) Tensile Strength	HAS SS (303 SS) [4]Shear Strength
3/8	3 1/2	1 - 3/8 x 3 1/2	7530	8300	9070	10620	2810	4680	4015	6190	9750	7120	5070	7800	6930
	5 1/4	2 - 3/8 x 3 1/2	11290	12450	13610	15930									
	7	2 - 3/8 x 3 1/2	15050	16600	18140	21240									
1/2	4 1/4	1 - 1/2 x 4 1/4	9990	11230	12470	14950	5110	8520	7850	14910	17750	12280	9230	14200	13490
	6 3/8	1 - 1/2 x 4 1/4 & 1 - 3/8 x 3 1/2	14980	16840	18700	22420									
	8 1/2	2 - 1/2 x 4 1/4	19980	22460	24930	29890									
5/8	5	1 - 5/8 x 5	15440	17220	19010	22570	8140	13580	11240	23730	28250	21120	14690	22600	19950
	7 1/2	1 - 5/8 x 5 & 1 - 1/2 x 4 1/4	23160	25840	28510	33860									
	10	2 - 5/8 x 5	30890	34450	38010	45140									
3/4	6 5/8	1 - 3/4 x 6 5/8	21580	24400	27230	32870	12020	20040	18010	35070	41750	28700	18030	28390	27260
	10	1 - 3/4 x 6 5/8 & 1 - 1/2 x 4 1/4	32370	36600	40840	49310									
	13 1/4	2 - 3/4 x 6 5/8	43160	48810	54450	65740									
7/8	6 5/8	1 - 7/8 x 6 5/8	25390	28720	32050	38710	16630	27720	23805	48510	57750	40410	(3)	(3)	(3)
	10	2 - 3/4 x 6 5/8	38080	43080	48080	58070									
	13 1/4	2 - 7/8 x 6 5/8	50780	57440	64100	77420									
1	8 1/4	1 - 1 x 8 1/4	36160	41110	46070	55980	21820	36360	28615	63630	75750	51590	(3)	(3)	(3)
	12 3/8	2 - 7/8 x 6 5/8	54230	61670	69100	83970									
	16 1/2	2 - 1 x 8 1/4	72310	82230	92140	111970									
1 1/4	12	1 - 1 1/4 x 12	76910	87060	97280	117820	34880	58140	49000	101745	121125	80740	(3)	(3)	(3)
	15	1 - 1 1/4 x 12 & 1 - 1 x 8 1/4	93505	103255	113025	132525									
	18	1 - 1 1/4 x 12 & 2 - 1 x 8 1/4	110100	119430	128760	147420									

1. Steel strength based on tensile stress area of standard UNC thread.
2. Use lower value of either bond or steel strength for tensile load.
3. 7/8-1 1/4 HAS SS only available through special order, no test data available.
4. Values obtained from test data at min. embedment.

Thickness Tolerances Per ASTM (mm)

Nominal edge thickness	100	200
Plate edge tolerance	+4/-0	+6/-0
Plate center tolerance	+7/-0	+11/-0

Offset Between Adjacent Panels

Two adjacent panels in a row can be offset (exhibit a step) equal to the allotted tolerance

Displacement Mag
Deformed Original Model
Max +1.0000E+00
Scale 4.2000E+01
Mode 1, +1.9212E+00

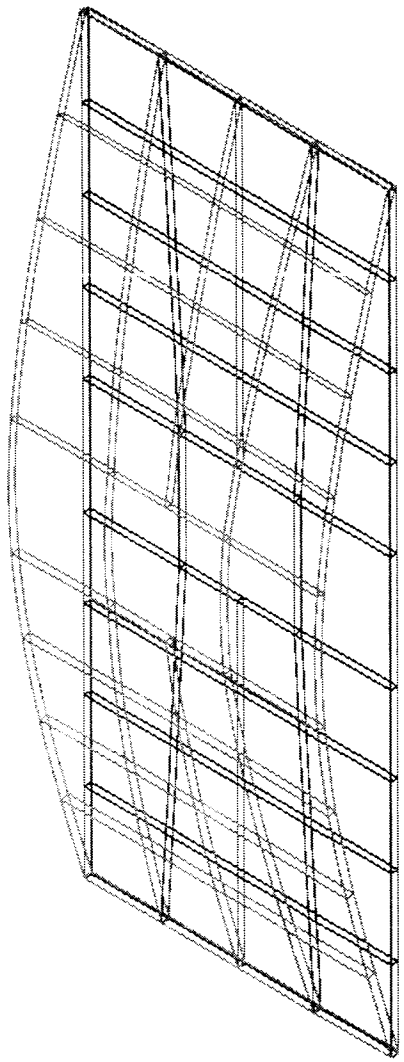

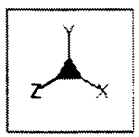

"mode1" - ds_cv_modal1 - modal1

MECHANICA
Release 6.0
06/12/94 15:44

Mode 1 - 100 mm Center Panel
(hz)

asb

Displacement Mag
Deformed Original Model
Max +1.0000E+00
Scale 4.2000E+01
Mode 2, +6.6659E+00

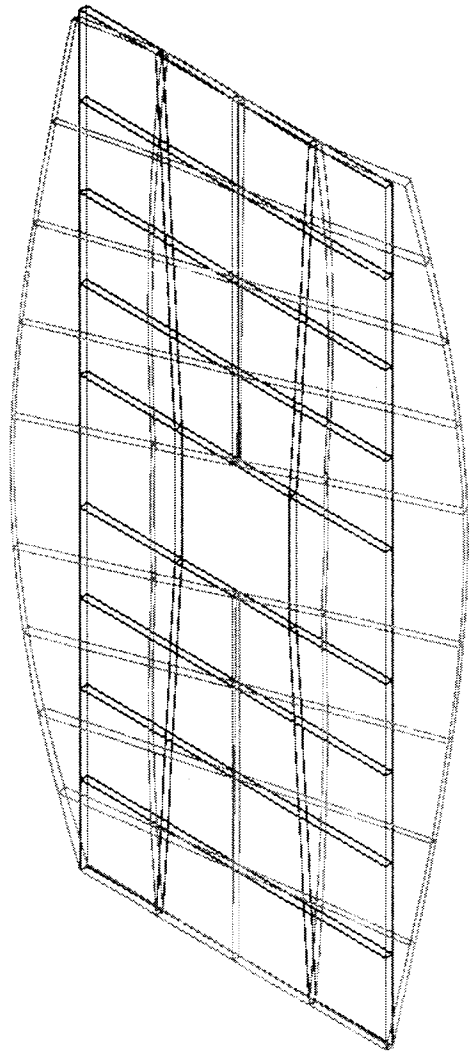

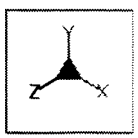

"mode2" - ds_cv_modal1 - modal1

MECHANICA
Release 6.0
06/12/94 - 15:46

Mode 2 - 100 mm Center Panel

(v)

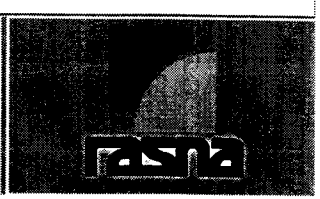

Displacement Mag
Deformed Original Model
Max +1.0000E+00
Scale 4.2000E+01
Mode 3, +7.9943E+00

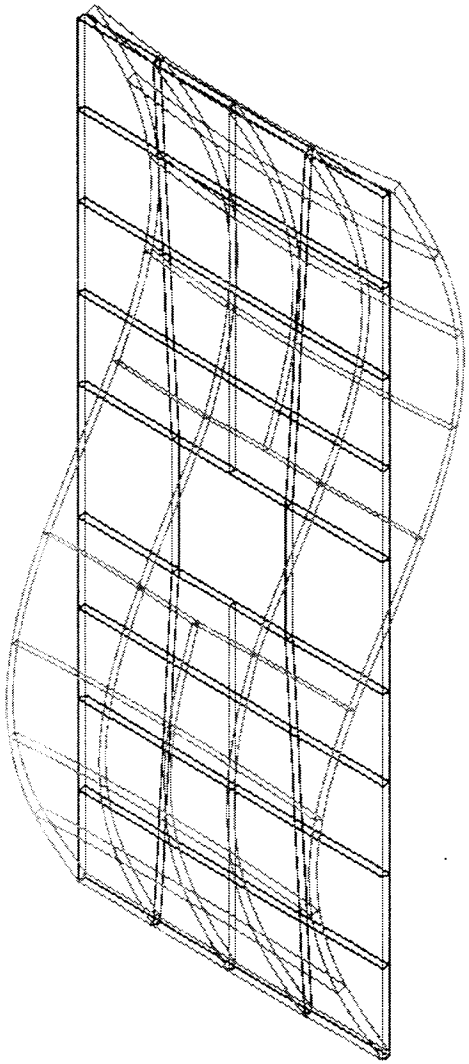

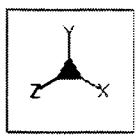

"mode3" - ds_cv_modal1 - modal1

MECHANICA
Release 6.0
06/12/97 - 15:47

Mode 3 - 100 mm Center Pane

Displacement Mag
Deformed Original Model
Max +1.0000E+00
Scale 4.2000E+01
Mode 1, +3.8342E+00

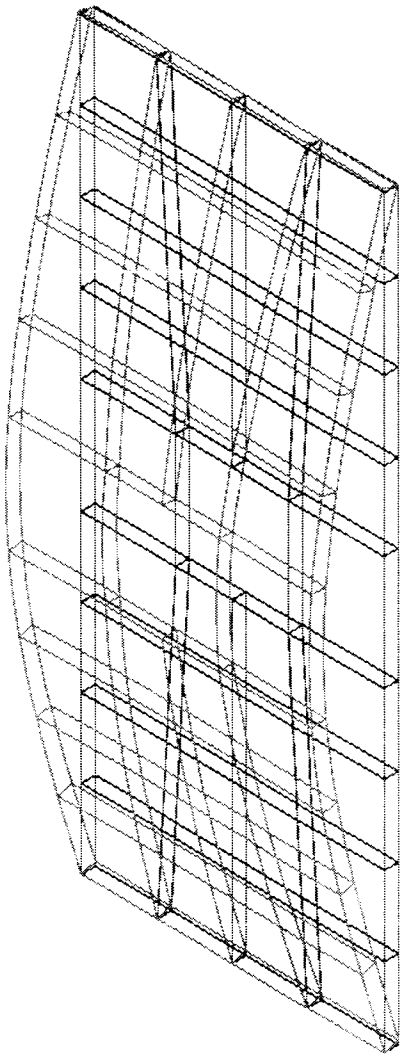

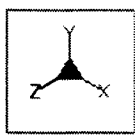

"model" - ds_cv_modal2 - modal2

MECHANICA
Release 6.0
06/12/94 15:50

Model - 200 mm Center Panel

(in)

Displacement Mag
Deformed Original Model
Max +1.0000E+00
Scale 4.2000E+01
Mode 2, +1.2826E+01

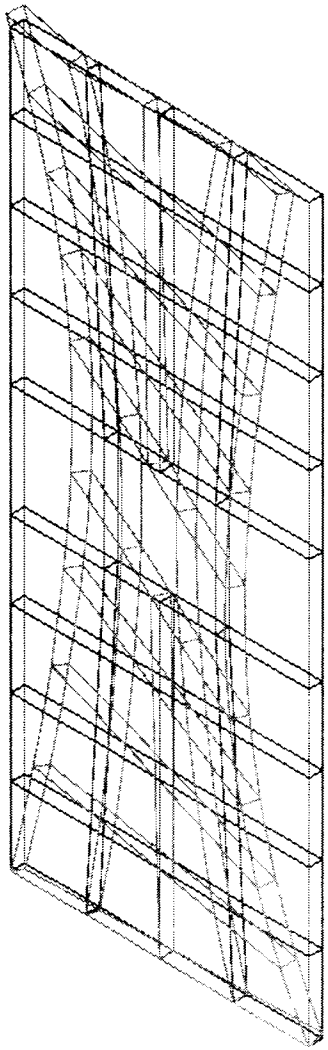

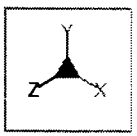

"mode2" - ds_cv_modal2 - modal2

MECHANICA
Release 6.0
06/14/94 - 09:00

Mode 2 - 200 mm Center Panel

(6/)

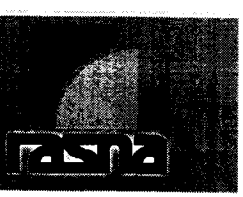

Displacement Mag
Deformed Original Model
Max +1.0000E+00
Scale 4.2000E+01
Mode 3, +1.5869E+01

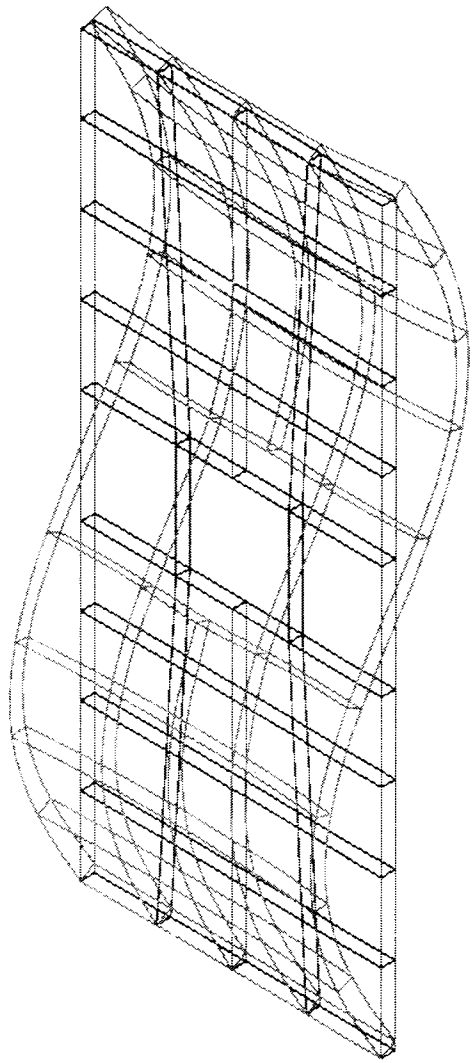

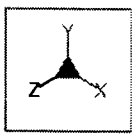

"mode3" - ds_cv_modal2 - modal2

MECHANICA
Release 6.0
06/12/94 - 15:52

Mode 3 - 200 mm Center Panel

(x,z)

pasta

mid_pt_edge
Frequency
Load: gravity_z

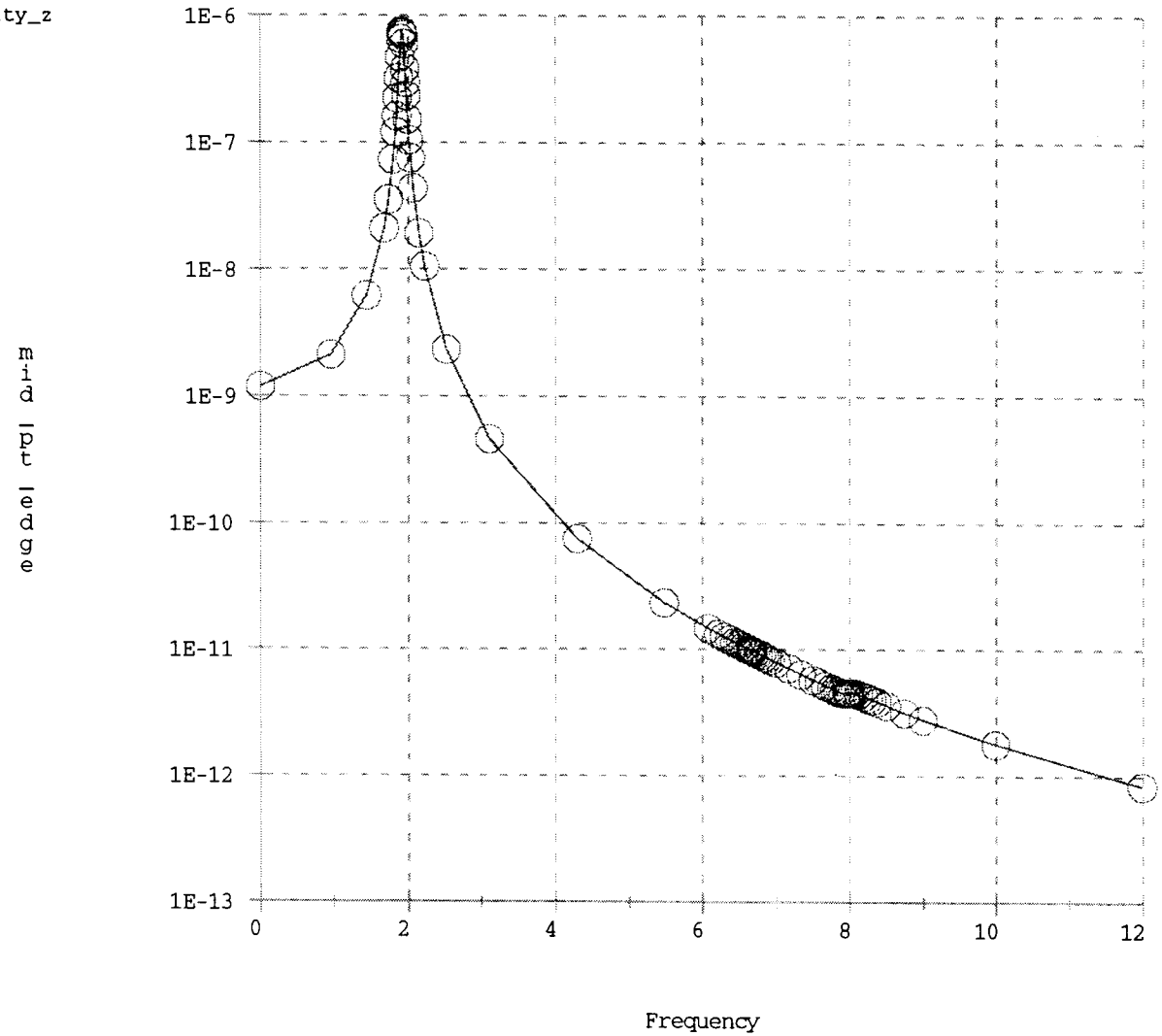

"mid_pt_z" - ds_cv_random1_z - random1_z

MECHANICA
Release 6.0
06/14/94 09:56

Random Response of Mid-Point on Edge
800 mm Panel Excited With 10^-10 g^2/Hz
(inches)

mid_pt_edge
Frequency
Load: gravity_z

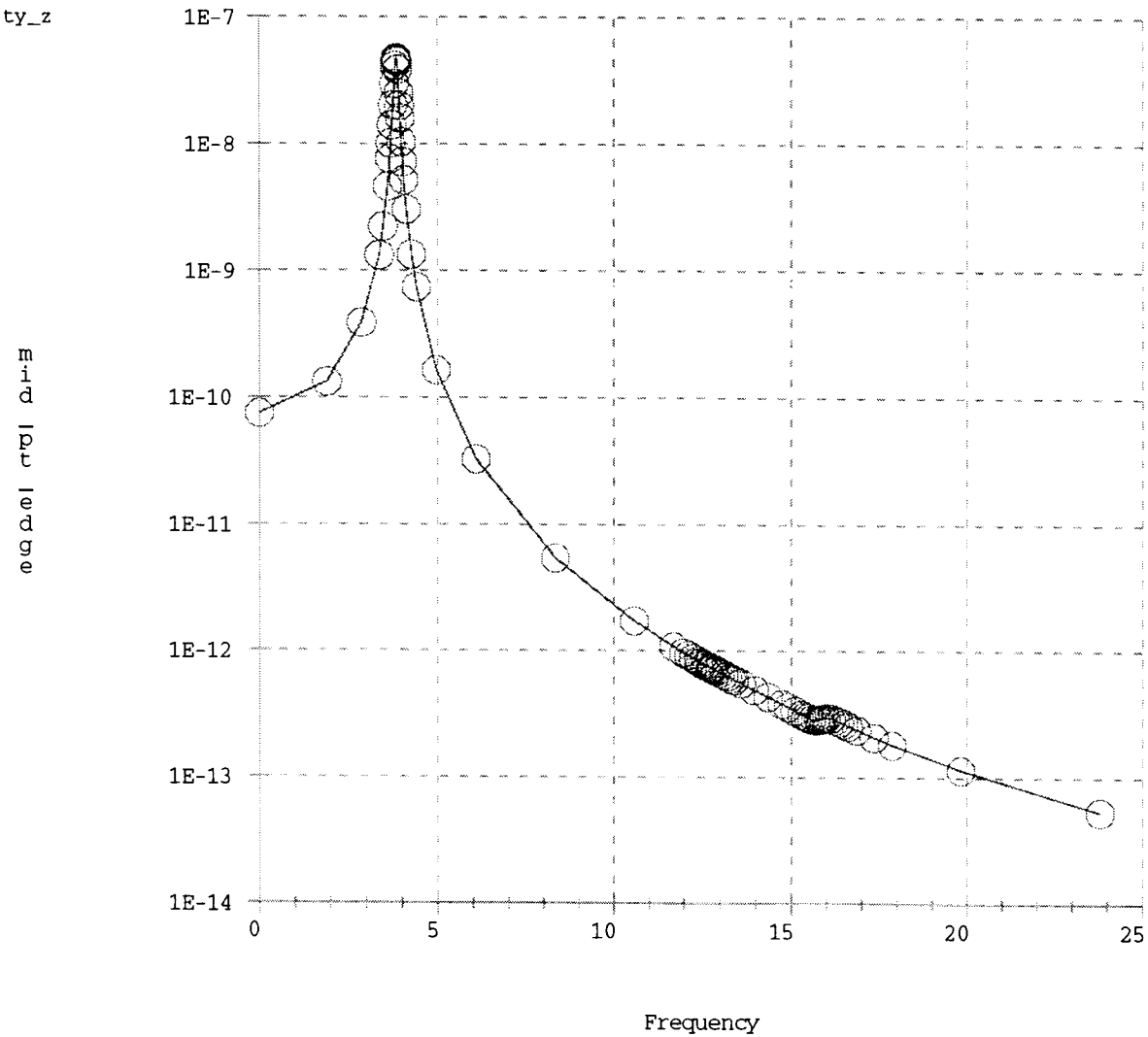

"mid_pt_z" - ds_cv_random2_z - random2_z

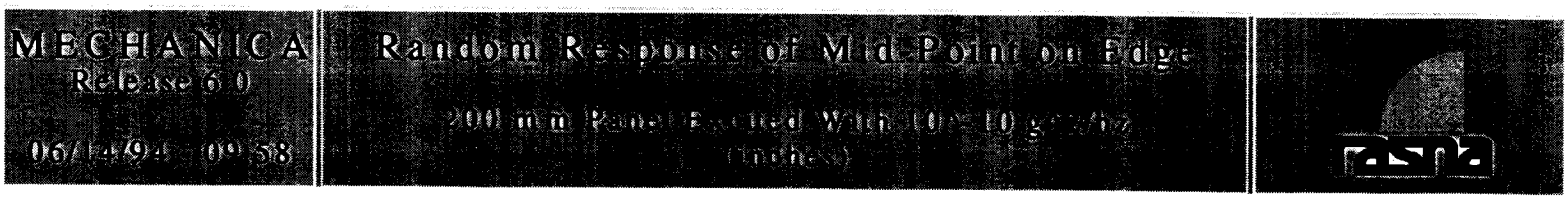

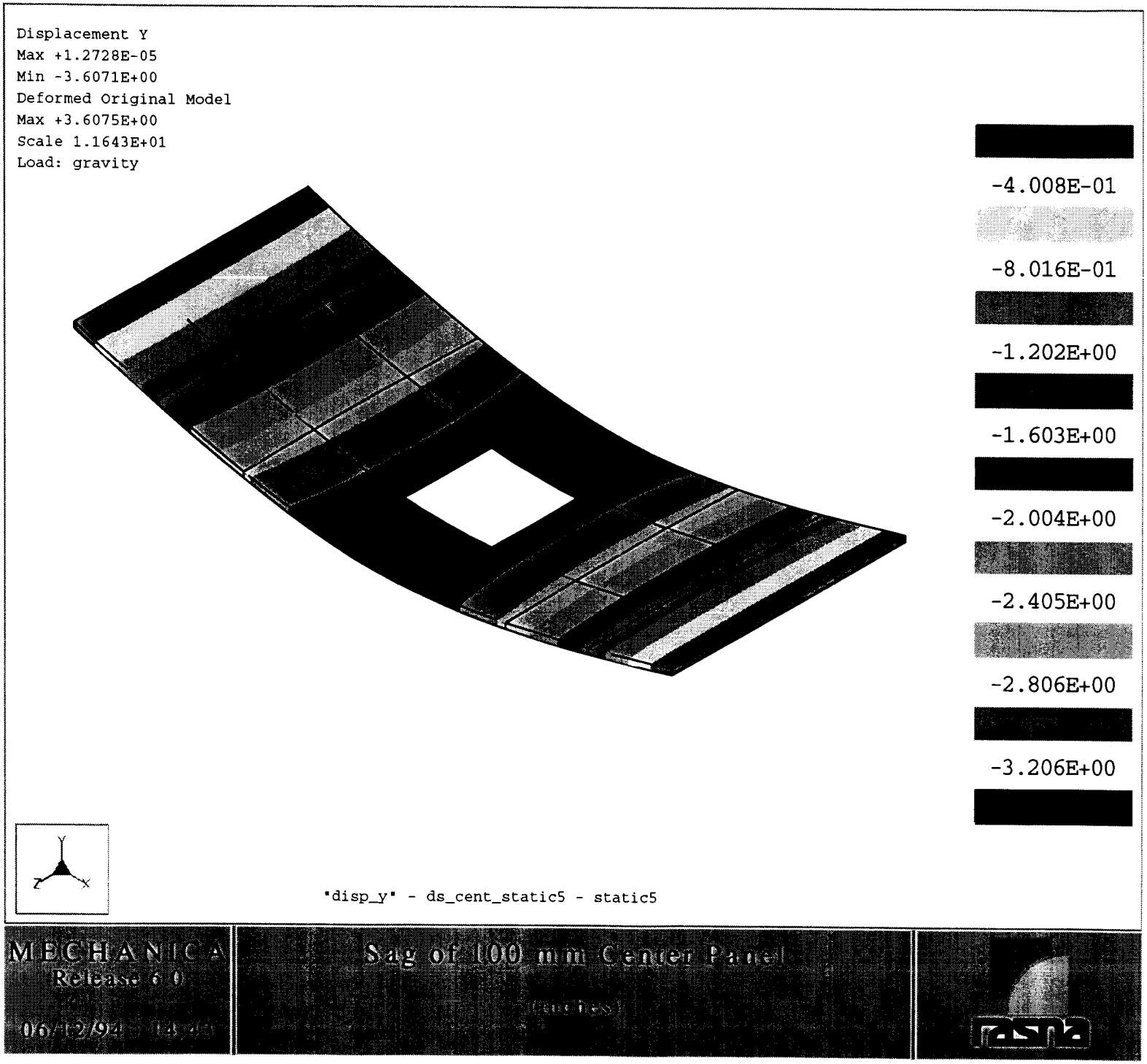
Displacement Y
Max +1.2728E-05
Min -3.6071E+00
Deformed Original Model
Max +3.6075E+00
Scale 1.1643E+01
Load: gravity
-4.008E-01
-8.016E-01
-1.202E+00
-1.603E+00
-2.004E+00
-2.405E+00
-2.806E+00
-3.206E+00
Y
Z
X
"disp_y" - ds_cent_static5 - static5
MECHANICA
Release 6.0
06/12/92 14:00
Sag of 100 mm Center Panel
(inches)

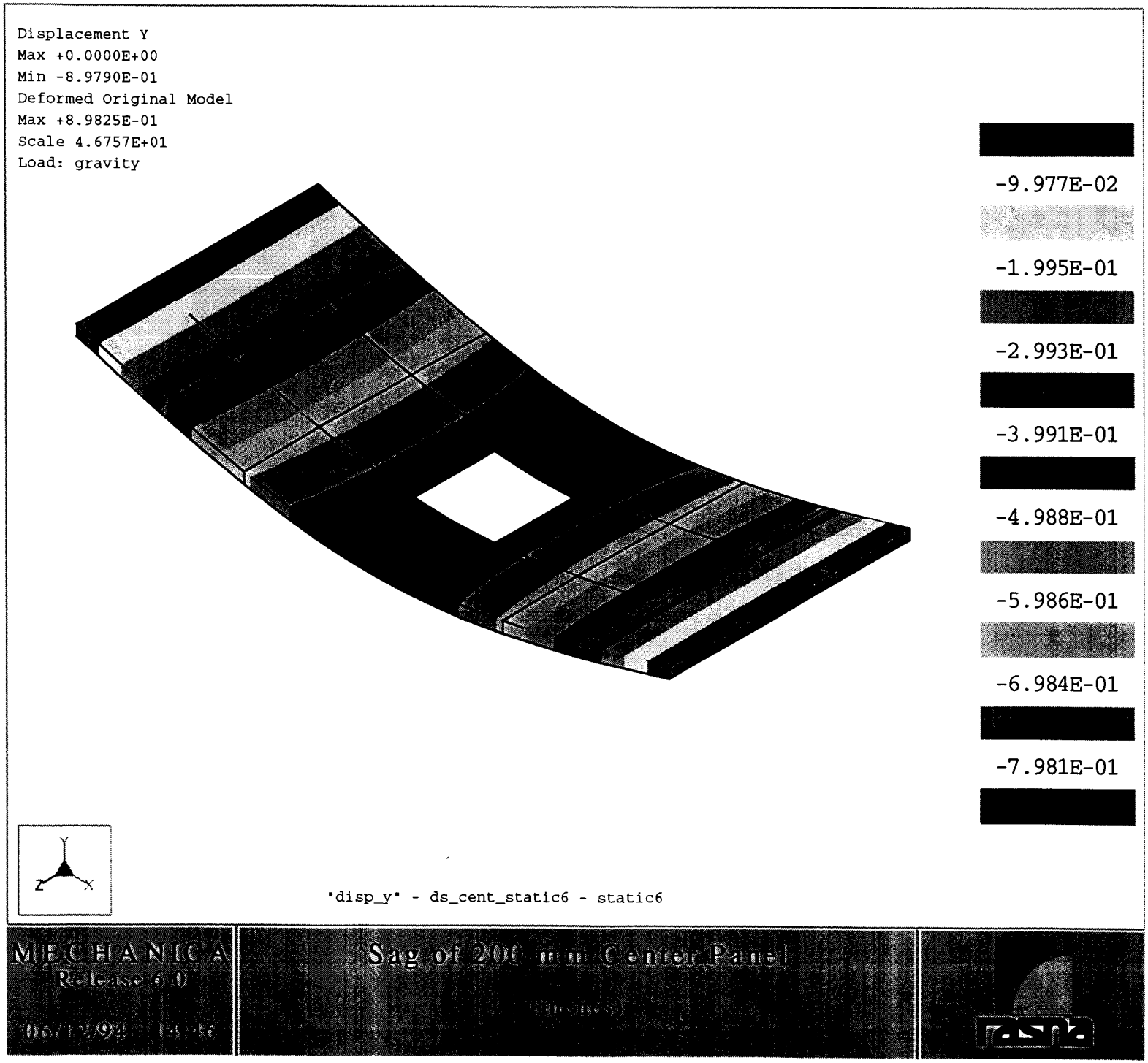
Displacement Y
Max +0.0000E+00
Min -8.9790E-01
Deformed Original Model
Max +8.9825E-01
Scale 4.6757E+01
Load: gravity
-9.977E-02
-1.995E-01
-2.993E-01
-3.991E-01
-4.988E-01
-5.986E-01
-6.984E-01
-7.981E-01
Y
Z
X
"disp_y" - ds_cent_static6 - static6
MECHANICA
Release 6.0
Sag of 200 mm Center Panel

Stress Von Mises (Maximum)
Max +2.2693E+04
Min +2.2064E+01
Deformed Original Model
Max +3.6075E+00
Scale 1.1643E+01
Load: gravity
+2.017E+04
+1.765E+04
+1.514E+04
+1.262E+04
+1.010E+04
+7.579E+03
+5.060E+03
+2.541E+03
Y
Z
X
"stress_vm" - ds_cent_static5 - static5
MECHANICA
Release 6.0
06/12/94 14:44
Von Mises Stress of 100 mm Center Panel
(psi)

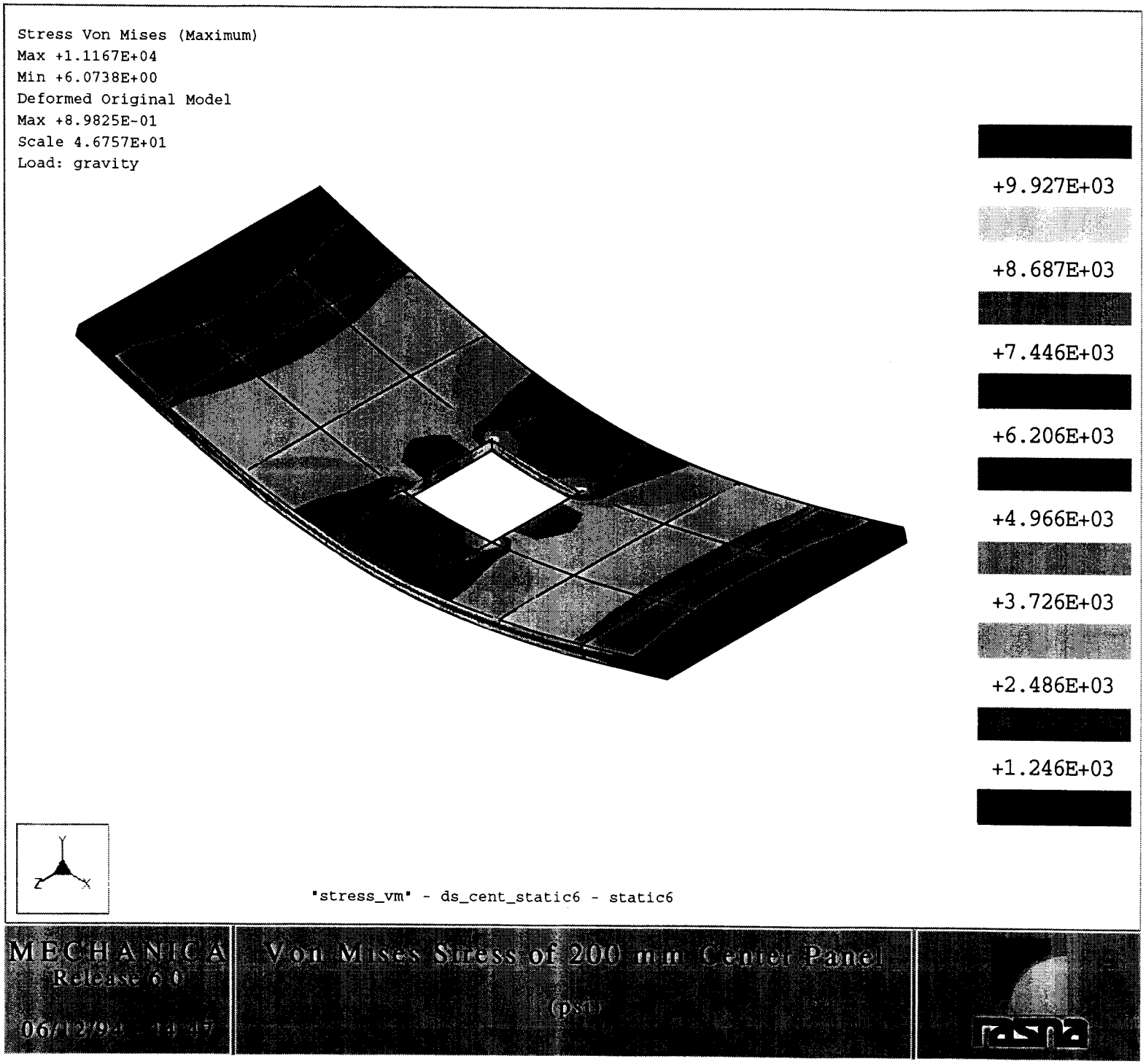
Stress Von Mises (Maximum)
Max +1.1167E+04
Min +6.0738E+00
Deformed Original Model
Max +8.9825E-01
Scale 4.6757E+01
Load: gravity
+9.927E+03
+8.687E+03
+7.446E+03
+6.206E+03
+4.966E+03
+3.726E+03
+2.486E+03
+1.246E+03
Y
Z
X
"stress_vm" - ds_cent_static6 - static6
MECHANICA
Release 6.0
06/12/94 14:47
Von Mises Stress of 200 mm Center Panel
(psi)
rasna

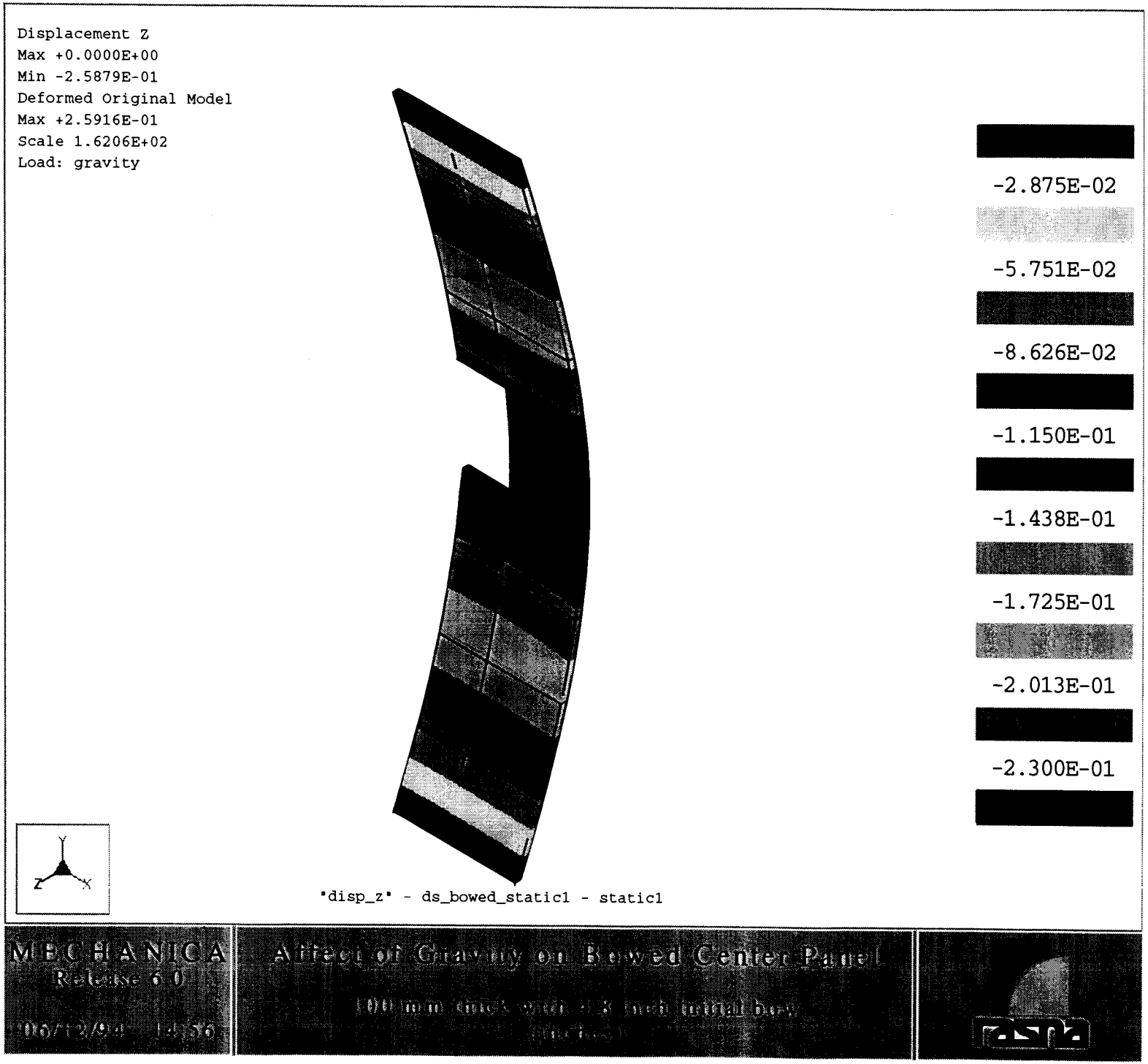
Displacement Z
Max +0.0000E+00
Min -2.5879E-01
Deformed Original Model
Max +2.5916E-01
Scale 1.6206E+02
Load: gravity
-2.875E-02
-5.751E-02
-8.626E-02
-1.150E-01
-1.438E-01
-1.725E-01
-2.013E-01
-2.300E-01
Y
Z
X
"disp_z" - ds_bowed_static1 - static1
MECHANICA
Release 6.0
06/12/94 14:56
Affect of Gravity on Bowed Center Panel

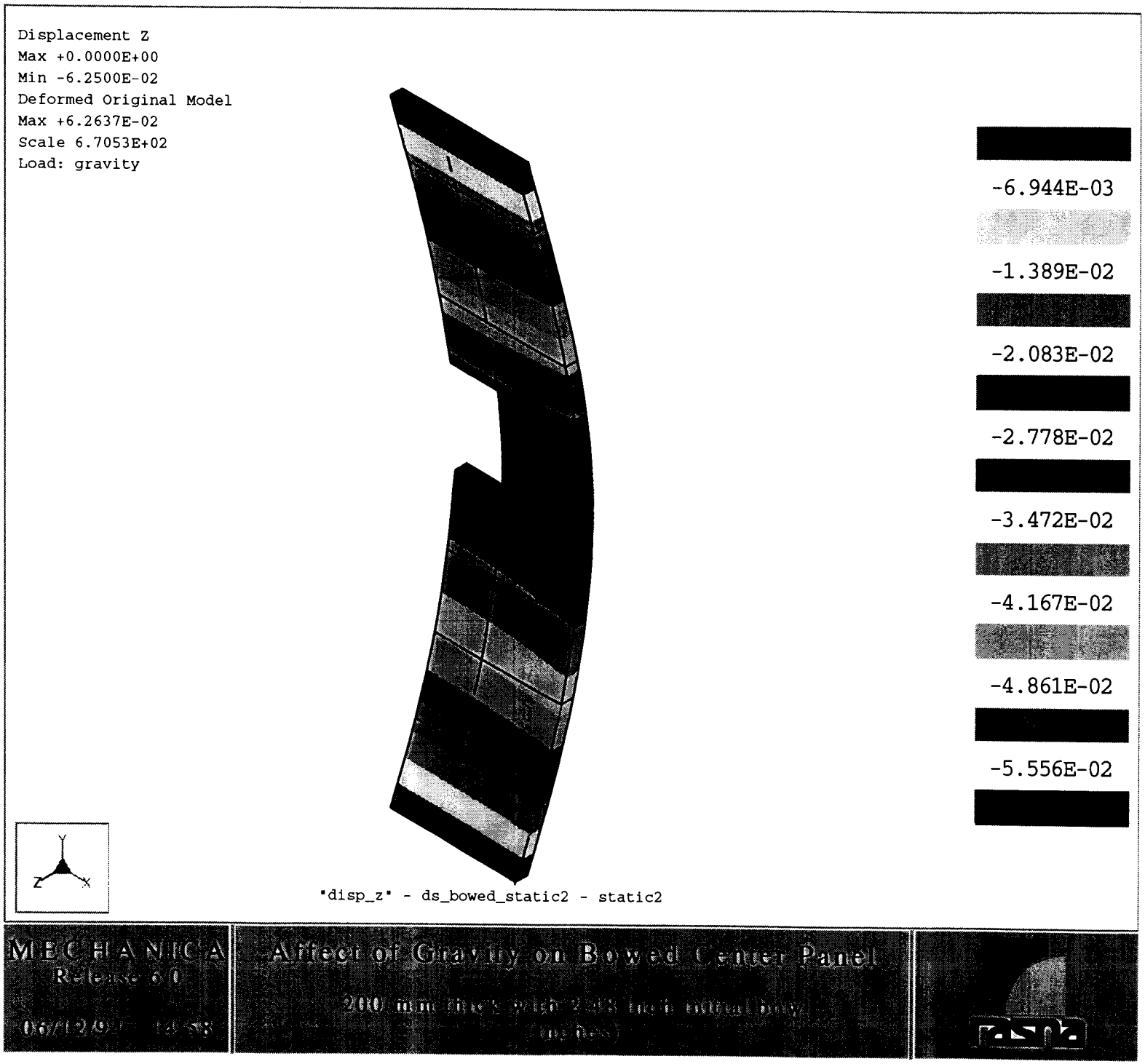
Displacement Z
Max +0.0000E+00
Min -6.2500E-02
Deformed Original Model
Max +6.2637E-02
Scale 6.7053E+02
Load: gravity
-6.944E-03
-1.389E-02
-2.083E-02
-2.778E-02
-3.472E-02
-4.167E-02
-4.861E-02
-5.556E-02
Y
Z
X
"disp_z" - ds_bowed_static2 - static2
MECHANICA
Release 6.0
Affect of Gravity on Bowed Center Panel

Muon ID Steel Location Scenarios

- One based on

  Tom Wright's detector design

- Another based on

  June 9, 1994 communication with Ken Read

Scenario Summary

- Either scenario can be accommodated in the space available
- The difference between the two scenarios, from a design/fabrication standpoint, is only one of location of the muon ID steel, not its design
- The risk level is different for the two scenarios
- The muon ID steel fabrication can proceed without a decision on the detector final locations

Tom Wright's Detector Design

Per drawing SKXDE-1293-01 the combined thickness of all the detectors is 879.8 mm, which includes

- 15 mm between detector planes
- 10 mm between detectors and adjacent steel for sliding clearance

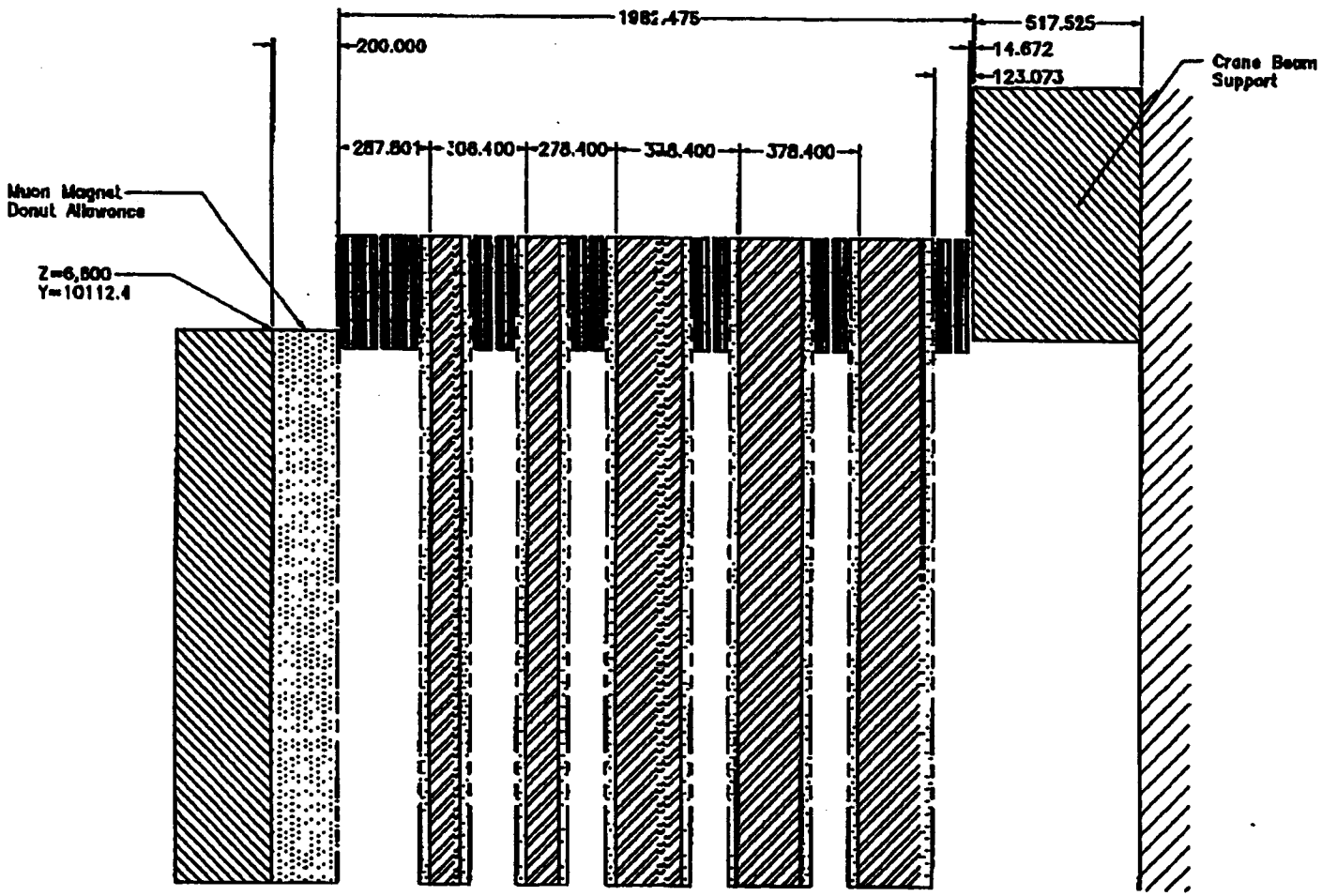

DETECTOR LAYOUT FOR CURRENT DESIGN OF MUON ID MODULES, WITH 3 CM TOLERANCE ON STEEL, 15 MM TOL BETWEEN MODULES, AND 10 MM TOL BETWEEN STEEL AND MODULES.

CONTRACT NO. AX4417		ORNL Oak Ridge National Laboratory, Oak Ridge, Tennessee 37831
DRAWN T.N. WRIGHT	DATE 12/14/93	XDE MECHANICAL ENGINEERING
CHECK		TITLE PHENIX MUON ID CROSS SECTION DETAIL – 3 CM
DESIGN T.N. WRIGHT	12/14/93	SIZE A · FSCM NO. NONE · DWG NO. SKXDE-1293-01 · REV.
DESIGN ACTIVITY		
CUSTOMER		SCALE NONE · RELEASE DATE 12/14/93 · SHEET 1 OF

DEC 20 '93 12:50PM ORNL-MECH. DESIGN #6155/4/986 P.3/10

Tom Wright's Detector Design

Item	Thickness	Starting z-position	Ending z-position	Starting z-position from wall	Ending z-position from wall
	(mm)	(mm)	(mm)	(mm)	(mm)
Muon magnet backplate			6600.0		2699.0
Muon magnet donut	200.0	6600.0	6800.0	2699.0	2499.0
MM tolerance zone	70.0	6800.0	6870.0	2499.0	2429.0
Donut/detector clearance	10.0	6870.0	6880.0	2429.0	2419.0
Detector #1 (first plane)	111.4	6880.0	6991.4	2419.0	2307.6
Detector/detector clearance	15.0	6991.4	7006.4	2307.6	2292.6
Detector #1 (second plate)	111.4	7006.4	7117.8	2292.6	2181.2
Steel/detector clearance	10.0	7117.8	7127.8	2181.2	2171.2
Plate #1 tolerance zone	90.0	7127.8	7217.8	2171.2	2081.2
Plate #1	100.0	7217.8	7317.8	2081.2	1981.2
Plate #1 tolerance zone	90.0	7317.8	7407.8	1981.2	1891.2
Installation tolerance	10.0	7407.8	7417.8	1891.2	1881.2
Steel/detector clearance	10.0	7417.8	7427.8	1881.2	1871.2
Detector #2 (first plane)	56.7	7427.8	7484.5	1871.2	1814.5
Detector/detector clearance	15.0	7484.5	7499.5	1814.5	1799.5
Detector #2 (second plate)	56.7	7499.5	7556.2	1799.5	1742.8
Steel/detector clearance	10.0	7556.2	7566.2	1742.8	1732.8
Plate #2 tolerance zone	90.0	7566.2	7656.2	1732.8	1642.8
Plate #2	100.0	7656.2	7756.2	1642.8	1542.8
Plate #2 tolerance zone	90.0	7756.2	7846.2	1542.8	1452.8
Installation tolerance	10.0	7846.2	7856.2	1452.8	1442.8
Steel/detector clearance	10.0	7856.2	7866.2	1442.8	1432.8
Detector #3 (first plane)	41.7	7866.2	7907.9	1432.8	1391.1
Detector/detector clearance	15.0	7907.9	7922.9	1391.1	1376.1
Detector #3 (second plate)	41.7	7922.9	7964.6	1376.1	1334.4
Steel/detector clearance	10.0	7964.6	7974.6	1334.4	1324.4
Plate #3 tolerance zone	50.0	7974.6	8024.6	1324.4	1274.4
Plate #3	200.0	8024.6	8224.6	1274.4	1074.4
Plate #3 tolerance zone	50.0	8224.6	8274.6	1074.4	1024.4
Installation tolerance	10.0	8274.6	8284.6	1024.4	1014.4

Tom Wright's Detector Design (continued)

Steel/detector clearance	10.0	8284.6	8294.6	1014.4	1004.4
Detector #4 (first plane)	41.7	8294.6	8336.3	1004.4	962.7
Detector/detector clearance	15.0	8336.3	8351.3	962.7	947.7
Detector #4 (second plate)	41.7	8351.3	8393.0	947.7	906.0
Steel/detector clearance	10.0	8393.0	8403.0	906.0	896.0
Plate #4 tolerance zone	50.0	8403.0	8453.0	896.0	846.0
Plate #4	200.0	8453.0	8653.0	846.0	646.0
Plate #4 tolerance zone	50.0	8653.0	8703.0	646.0	596.0
Installation tolerance	10.0	8703.0	8713.0	596.0	586.0
Steel/detector clearance	10.0	8713.0	8723.0	586.0	576.0
Detector #5 (first plane)	41.7	8723.0	8764.7	576.0	534.3
Detector/detector clearance	15.0	8764.7	8779.7	534.3	519.3
Detector #5 (second plate)	41.7	8779.7	8821.4	519.3	477.6
Steel/detector clearance	10.0	8821.4	8831.4	477.6	467.6
Plate #5 tolerance zone	50.0	8831.4	8881.4	467.6	417.6
Plate #5	200.0	8881.4	9081.4	417.6	217.6
Plate #5 tolerance zone	50.0	9081.4	9131.4	217.6	167.6
Installation tolerance	10.0	9131.4	9141.4	167.6	157.6
Steel/detector clearance	10.0	9141.4	9151.4	157.6	147.6
Detector #6 (first plane)	41.7	9151.4	9193.1	147.6	105.9
Detector/detector clearance	15.0	9193.1	9208.1	105.9	90.9
Detector #6 (second plate)	41.7	9208.1	9249.8	90.9	49.2
Wall/detector clearance	10.0	9249.8	9259.8	49.2	39.2
Wall tolerance zone	39.2	9259.8	9299.0	39.2	0.0

Tolerances for Tom Wright's Design (mm)

Plate nominal thickness	100	200
Available tolerance (inc. thickness tolerance)	180	100
Russian estimate in vertical position	80	50
Contingency	100	50

New, Equal Cross-Section, Detector Design

- Detector cross section same at all locations
- Detector planes are 72 mm thick
- Space between planes is 10 mm
- Space between steel and detectors is 10 mm
- Total for six detectors is 1044 mm (increase of 164.2 mm above Tom Wright's design)

Equal Cross Section Detector Design

Item	Thickness	Starting z-position	Ending z-position	Starting z-position from wall	Ending z-position from wall
	(mm)	(mm)	(mm)	(mm)	(mm)
Muon magnet backplate			6600.0		2699.0
Muon magnet donut	200.0	6600.0	6800.0	2699.0	2499.0
MM tolerance zone	70.0	6800.0	6870.0	2499.0	2429.0
Donut/detector clearance	10.0	6870.0	6880.0	2429.0	2419.0
Detector #1 (first plane)	72.0	6880.0	6952.0	2419.0	2347.0
Detector/detector clearance	10.0	6952.0	6962.0	2347.0	2337.0
Detector #1 (second plate)	72.0	6962.0	7034.0	2337.0	2265.0
Steel/detector clearance	10.0	7034.0	7044.0	2265.0	2255.0
Plate #1 tolerance zone	67.5	7044.0	7111.5	2255.0	2187.5
Plate #1	100.0	7111.5	7211.5	2187.5	2087.5
Plate #1 tolerance zone	67.5	7211.5	7279.0	2087.5	2020.0
Installation tolerance	10.0	7279.0	7289.0	2020.0	2010.0
Steel/detector clearance	10.0	7289.0	7299.0	2010.0	2000.0
Detector #2 (first plane)	72.0	7299.0	7371.0	2000.0	1928.0
Detector/detector clearance	10.0	7371.0	7381.0	1928.0	1918.0
Detector #2 (second plate)	72.0	7381.0	7453.0	1918.0	1846.0
Steel/detector clearance	10.0	7453.0	7463.0	1846.0	1836.0
Plate #2 tolerance zone	67.5	7463.0	7530.5	1836.0	1768.5
Plate #2	100.0	7530.5	7630.5	1768.5	1668.5
Plate #2 tolerance zone	67.5	7630.5	7698.0	1668.5	1601.0
Installation tolerance	10.0	7698.0	7708.0	1601.0	1591.0
Steel/detector clearance	10.0	7708.0	7718.0	1591.0	1581.0
Detector #3 (first plane)	72.0	7718.0	7790.0	1581.0	1509.0
Detector/detector clearance	10.0	7790.0	7800.0	1509.0	1499.0
Detector #3 (second plate)	72.0	7800.0	7872.0	1499.0	1427.0
Steel/detector clearance	10.0	7872.0	7882.0	1427.0	1417.0
Plate #3 tolerance zone	35.5	7882.0	7917.5	1417.0	1381.5
Plate #3	200.0	7917.5	8117.5	1381.5	1181.5
Plate #3 tolerance zone	35.5	8117.5	8153.0	1181.5	1146.0
Installation tolerance	10.0	8153.0	8163.0	1146.0	1136.0

Equal Cross Section Detector Design (continued)

Steel/detector clearance	10.0	8163.0	8173.0	1136.0	1126.0
Detector #4 (first plane)	72.0	8173.0	8245.0	1126.0	1054.0
Detector/detector clearance	10.0	8245.0	8255.0	1054.0	1044.0
Detector #4 (second plate)	72.0	8255.0	8327.0	1044.0	972.0
Steel/detector clearance	10.0	8327.0	8337.0	972.0	962.0
Plate #4 tolerance zone	35.5	8337.0	8372.5	962.0	926.5
Plate #4	200.0	8372.5	8572.5	926.5	726.5
Plate #4 tolerance zone	35.5	8572.5	8608.0	726.5	691.0
Installation tolerance	10.0	8608.0	8618.0	691.0	681.0
Steel/detector clearance	10.0	8618.0	8628.0	681.0	671.0
Detector #5 (first plane)	72.0	8628.0	8700.0	671.0	599.0
Detector/detector clearance	10.0	8700.0	8710.0	599.0	589.0
Detector #5 (second plate)	72.0	8710.0	8782.0	589.0	517.0
Steel/detector clearance	10.0	8782.0	8792.0	517.0	507.0
Plate #5 tolerance zone	35.5	8792.0	8827.5	507.0	471.5
Plate #5	200.0	8827.5	9027.5	471.5	271.5
Plate #5 tolerance zone	35.5	9027.5	9063.0	271.5	236.0
Installation tolerance	10.0	9063.0	9073.0	236.0	226.0
Steel/detector clearance	10.0	9073.0	9083.0	226.0	216.0
Detector #6 (first plane)	72.0	9083.0	9155.0	216.0	144.0
Detector/detector clearance	10.0	9155.0	9165.0	144.0	134.0
Detector #6 (second plate)	72.0	9165.0	9237.0	134.0	62.0
Wall/detector clearance	10.0	9237.0	9247.0	62.0	52.0
Wall tolerance zone	52.0	9247.0	9299.0	52.0	0.0

Tolerance Analysis for Equal X-Section Design (mm)

If only a tolerance per ASTM standards (measured on horizontal surface) is guaranteed by steel mill:

Nominal thickness	100	200
• Flatness tolerance inc. thickness per ASTM	30	40
• Additional flatness tolerance due to sag when measured on horizontal surface	92	23
• Additional flatness tolerance due to increased bow when installed vertically	7	2
Total tolerance required	129	65
Tolerance available	135	71
Russian estimate in vertical position	80	50
Contingency	55	21

How Much Risk Is Acceptable?

BNL must detemine how much risk is acceptable from cost and schedule considerations

Inspection of Muon ID Panels

- Success requires accurate inspection in Russia of flatness in vertical position
- Two possible inspection techniques
  - Theodolite with infrared distance measurement capability
  - Modified laser level (rotating prism and laser)
- Time required may be as much as one month

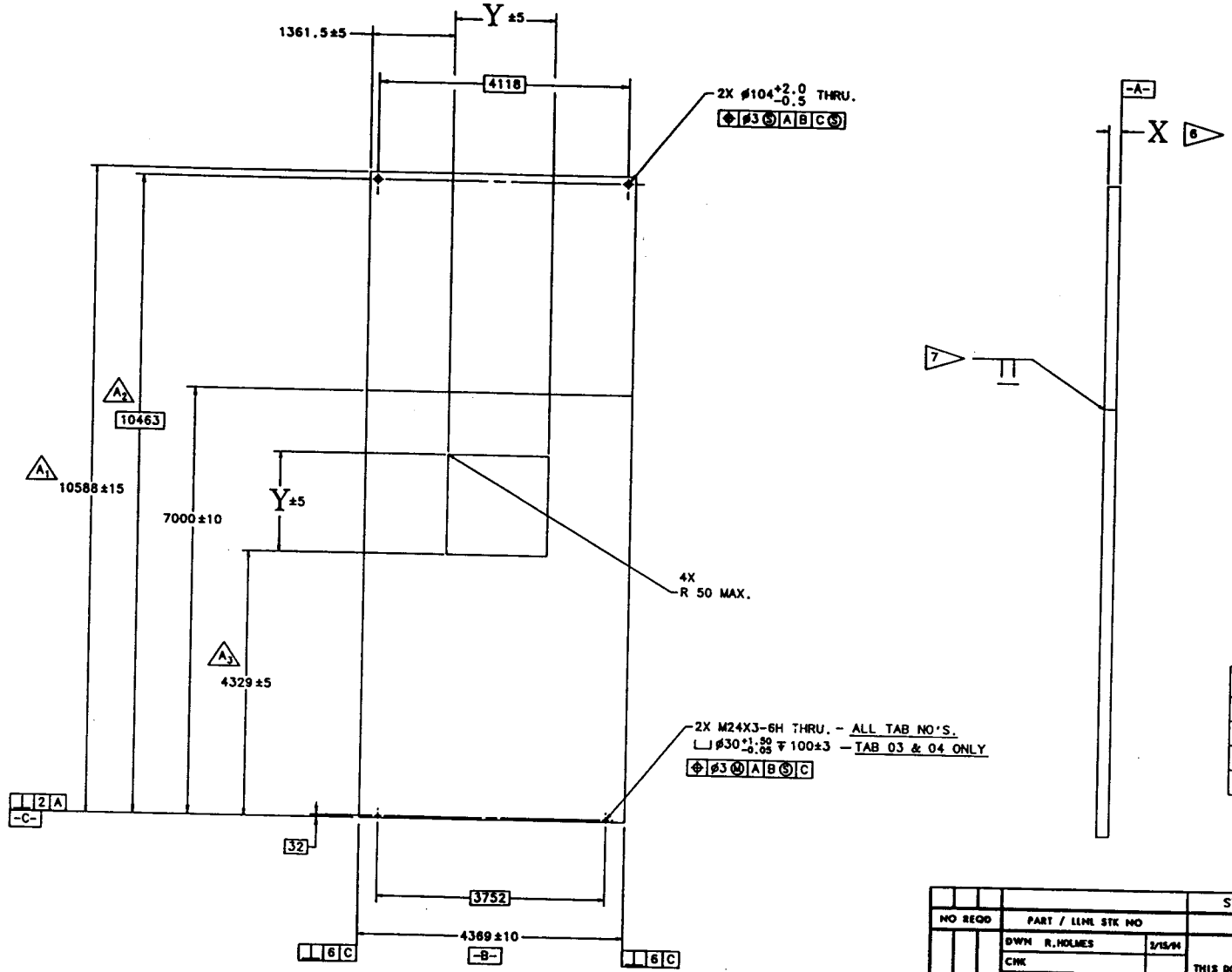

NOTES
UNLESS OTHERWISE SPECIFIED:

1. ALL DIMENSIONS ARE IN ~~INCHES~~, MM
2. DIMENSIONING AND TOLERANCING PER ANSI Y14.5M-1982.
3. SURFACE TEXTURE PER ANSI B46.1-1978.
4. 3.2 ALL MACHINED SURFACES.
5. BREAK SHARP EDGES, CHAM. OR R 1 TO 2MM
6. ROLLED PLATE TO BE FLAT OVER FULL WIDTH AND LENGTH WITHIN 30mm(TAB 01 & 02) AND 40mm(TAB 02 & 03). THIS TOLERANCE INCLUDES THICKNESS TOLERANCE AND IS TO BE MEASURED WITH THE UNRESTRAINED PLATE RESTING ON A FLAT HORIZONTAL SURFACE.
7. PART CAN BE MADE UP OF TWO PIECES JOINED BY FULL PENETRATION WELDING. (WELD CAN BE UNDERFLUSH BY 5mm MAX.) PART MUST BE FLAT AFTER WELDING PER TOLERANCES SPECIFIED IN NOTE 6.
8. PROVISIONS FOR LIFTING AND TURN OVER OF PART MAY BE ADDED WITH LLNL APPROVAL
9. APPROXIMATE WEIGHTS:
   100MM THICK.(TAB 01) - 40.5 ENGLISH TONS
   200mm THICK.(TAB 03) - 81 ENGLISH TONS

TAB NO.	X	Y	NUMBER REQUIRED
01	$100^{+7.0}_{-0.3}$	OMIT	2
02	$100^{+7.0}_{-0.3}$	1646	1
03	$200^{+11.0}_{-0.3}$	OMIT	5
04	$200^{+11.0}_{-0.3}$	1646	2

LTR	DWN	CHK	APVD	DATE	ZONE	CHANGE
A3						4329 WAS 4409
A2	RHH			6/8/94		10463 WAS 10543
A1						10588 WAS 10668

NO REQD	PART / LLNL STK NO	DESCRIPTION / MATERIAL	SPEC NO	ITEM
		STEEL	ASTM A36	

DWN R.HOLMES 2/15/94
CHK
APVD
CLASSIFIED BY
TITLE
DATE

LAWRENCE LIVERMORE NATIONAL LABORATORY
MECHANICAL ENGINEERING DEPT
UNIVERSITY OF CALIFORNIA

CLASSIFICATION

THIS DOCUMENT IS THE PROPERTY OF THE UNIVERSITY OF CALIFORNIA LAWRENCE LIVERMORE LABORATORY. PRODUCTION PROHIBITED WITHOUT PERMISSION OF THE MECHANICAL ENGINEERING DEPARTMENT.

MAJOR UNIT: RELATIVISTIC HEAVY ION COLLIDER (RHIC)
SUBASSY: PHENIX MUON PISTON MAGNET
DETAIL: PLATE, MUON IDENTIFIER
SHOWN ON AAA
ACCT NO
DRAWING NO: AAA94-101062-0A
SCALE: NONE
SHEET 1 OF 1

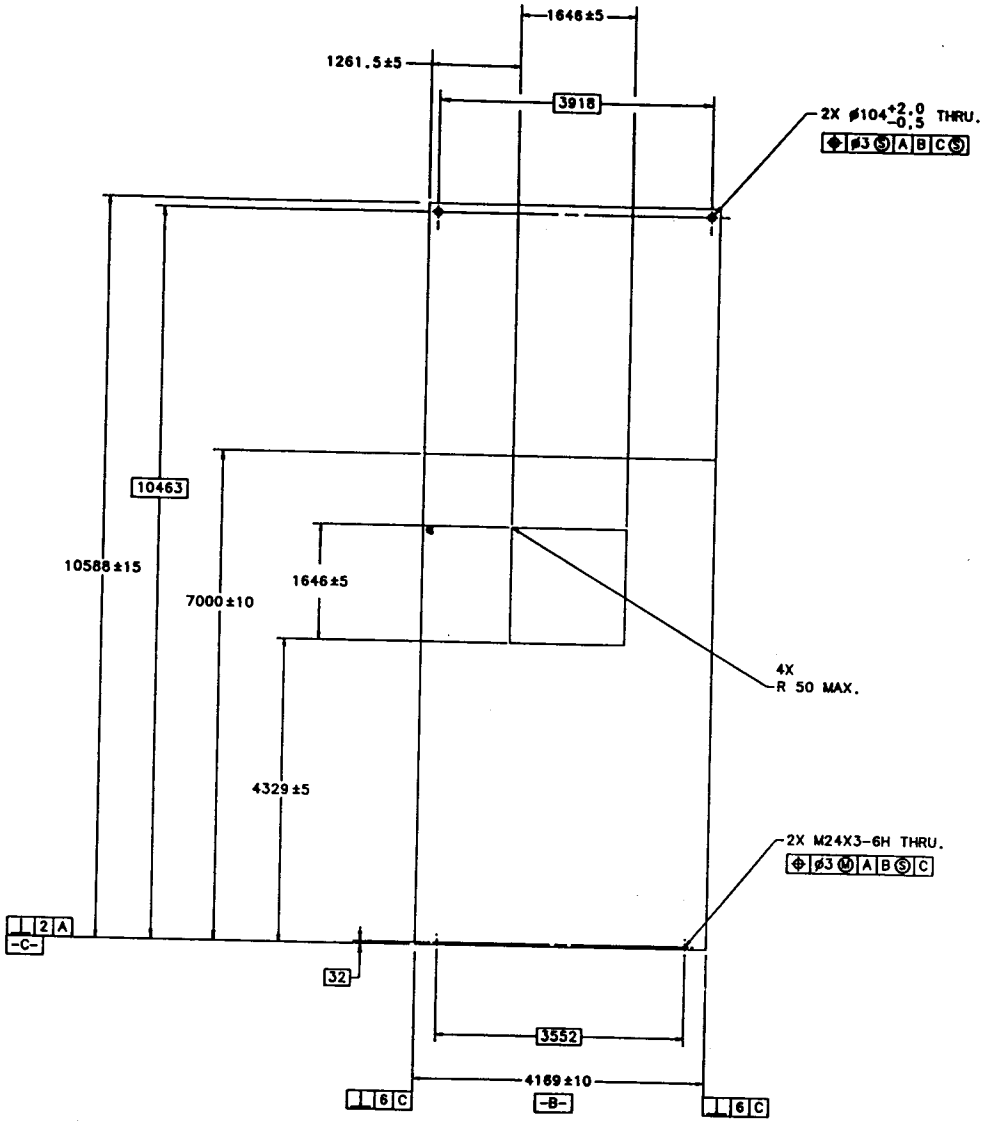

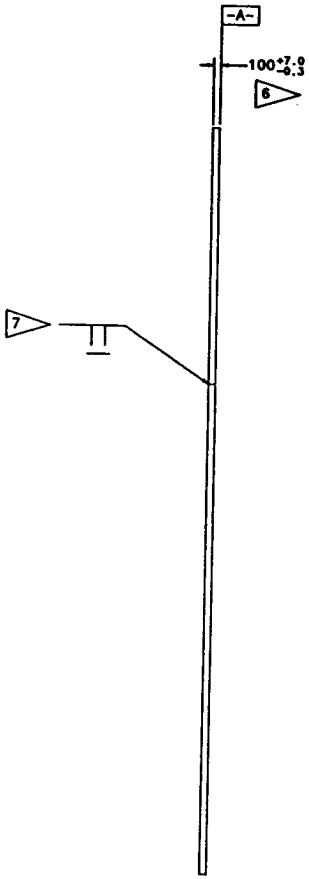

NOTES
UNLESS OTHERWISE SPECIFIED:

1. ALL DIMENSIONS ARE IN ~~INCHES~~, MM
2. DIMENSIONING AND TOLERANCING PER ANSI Y14.5M-1982.
3. SURFACE TEXTURE PER ANSI B46.1-1978.
4. 3.2 ALL MACHINED SURFACES.
5. BREAK SHARP EDGES, CHAM. OR R 1 TO 2MM
6. ROLLED PLATE TO BE FLAT OVER FULL WIDTH AND LENGTH WITHIN 30mm. THIS TOLERANCE INCLUDES THICKNESS TOLERANCE AND IS TO BE MEASURED WITH THE UNRESTRAINED PLATE RESTING ON A FLAT HORIZONTAL SURFACE.
7. PART CAN BE MADE UP OF TWO PIECES JOINED BY FULL PENETRATION WELDING. (WELD CAN BE UNDERFLUSH BY 5mm MAX.) PART MUST BE FLAT AFTER WELDING PER TOLERANCES SPECIFIED IN NOTE 6.
8. PROVISIONS FOR LIFTING AND TURN OVER OF PART MAY BE ADDED WITH LLNL APPROVAL
9. APPROXIMATE WEIGHT: 40.5 ENGLISH TONS

NO REQD	PART / LLNL STK NO	DESCRIPTION / MATERIAL	SPEC NO	ITEM
		STEEL	ASTM A36	

DWN R.HOLMES	6/6/94	
CHK		
APVD		
CLASSIFIED BY		
TITLE		DATE

LAWRENCE LIVERMORE NATIONAL LABORATORY
MECHANICAL ENGINEERING DEPT
UNIVERSITY OF CALIFORNIA

CLASSIFICATION

THIS DOCUMENT IS THE PROPERTY OF THE UNIVERSITY OF CALIFORNIA LAWRENCE LIVERMORE LABORATORY. PRODUCTION PROHIBITED WITHOUT PERMISSION OF THE MECHANICAL ENGINEERING DEPARTMENT.

MAJOR UNIT: RELATIVISTIC HEAVY ION COLLIDER (RHIC)
SUBASSY: PHENIX MUON PISTON MAGNET
DETAIL: PLATE, MUON IDENTIFIER
SHOWN ON AAA
ACCT NO
DRAWING NO: AAA94-101073-00
SCALE: NONE
SHEET 1 OF 1

LTR	DWN	CHK	APVD	DATE	ZONE	CHANGE

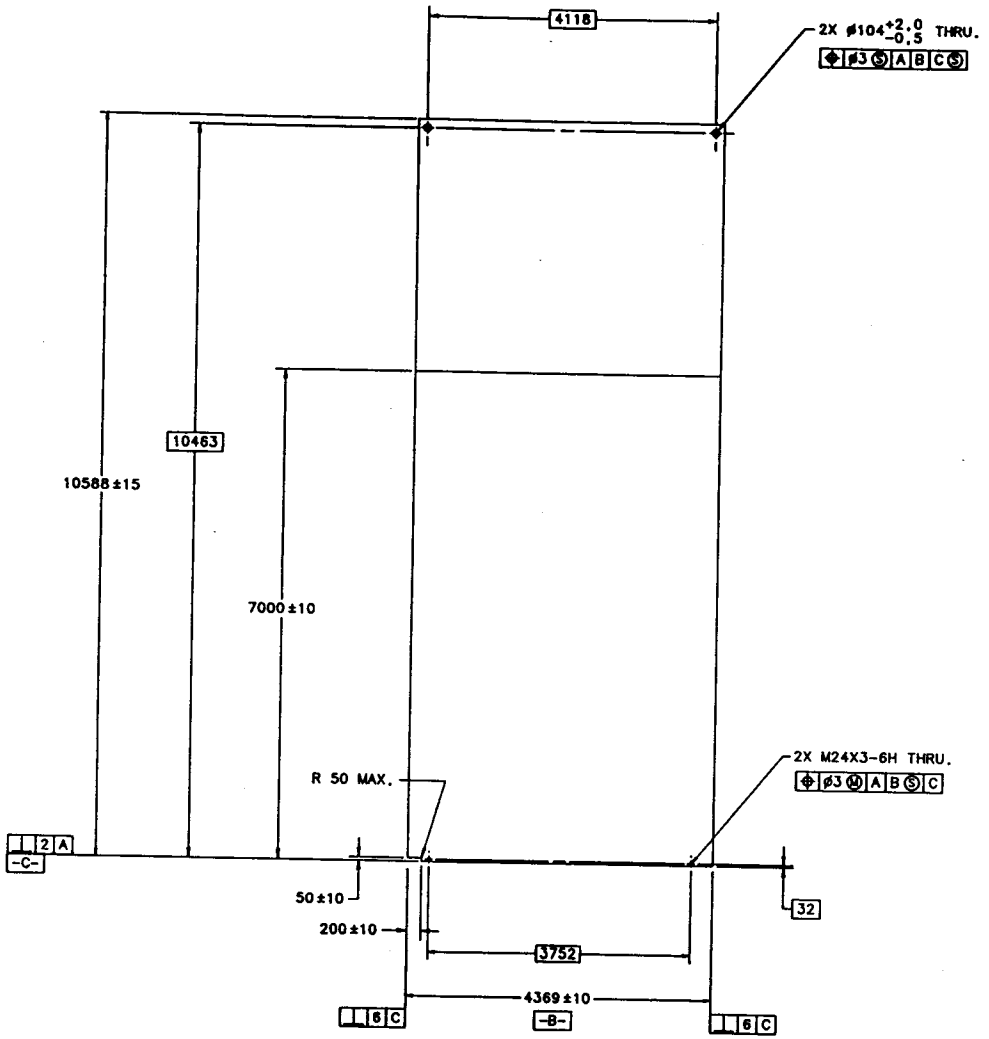

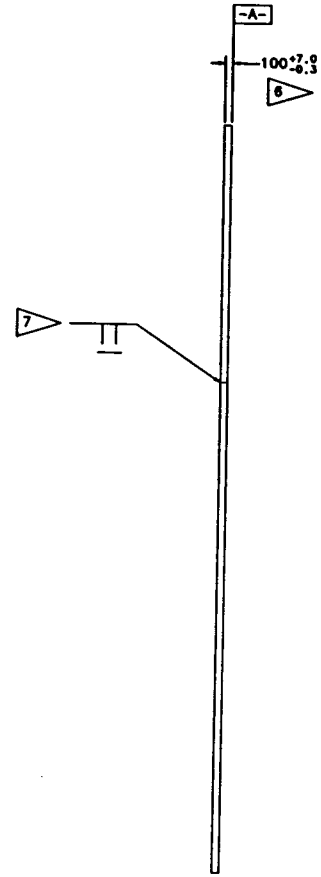

NOTES
UNLESS OTHERWISE SPECIFIED:

1. ALL DIMENSIONS ARE IN ~~INCHES~~ MM
2. DIMENSIONING AND TOLERANCING PER ANSI Y14.5M-1982.
3. SURFACE TEXTURE PER ANSI B46.1-1978.
4. 3.2 ALL MACHINED SURFACES.
5. BREAK SHARP EDGES, CHAM. OR R 1 TO 2MM
6. ROLLED PLATE TO BE FLAT OVER FULL WIDTH AND LENGTH WITHIN 30mm. THIS TOLERANCE INCLUDES THICKNESS TOLERANCE AND IS TO BE MEASURED WITH THE UNRESTRAINED PLATE RESTING ON A FLAT HORIZONTAL SURFACE.
7. PART CAN BE MADE UP OF TWO PIECES JOINED BY FULL PENETRATION WELDING. (WELD CAN BE UNDERFLUSH BY 5mm MAX.) PART MUST BE FLAT AFTER WELDING PER TOLERANCES SPECIFIED IN NOTE 6.
8. PROVISIONS FOR LIFTING AND TURN OVER OF PART MAY BE ADDED WITH LLNL APPROVAL
9. APPROXIMATE WEIGHT: 40.5 ENGLISH TONS

NO REQD	PART / LLNL STK NO	DESCRIPTION / MATERIAL	SPEC NO	ITEM
		STEEL	ASTM A36	

DWN R.HOLMES 6/5/94
CHK
APVD
CLASSIFIED BY
TITLE
DATE

CLASSIFICATION

THIS DOCUMENT IS THE PROPERTY OF THE UNIVERSITY OF CALIFORNIA LAWRENCE LIVERMORE LABORATORY. PRODUCTION PROHIBITED WITHOUT PERMISSION OF THE MECHANICAL ENGINEERING DEPARTMENT.

LAWRENCE LIVERMORE NATIONAL LABORATORY
MECHANICAL ENGINEERING DEPT
UNIVERSITY OF CALIFORNIA

MAJOR UNIT: RELATIVISTIC HEAVY ION COLLIDER (RHIC)
SUBASSY: PHENIX MUON PISTON MAGNET
DETAIL: PLATE, MUON IDENTIFIER
SHOWN ON AAA
ACCT NO
DRAWING NO: AAA94-101076-00
SCALE: NONE
SHEET 1 OF 1

LTR	DWN	CHK	APVD	DATE	ZONE	CHANGE

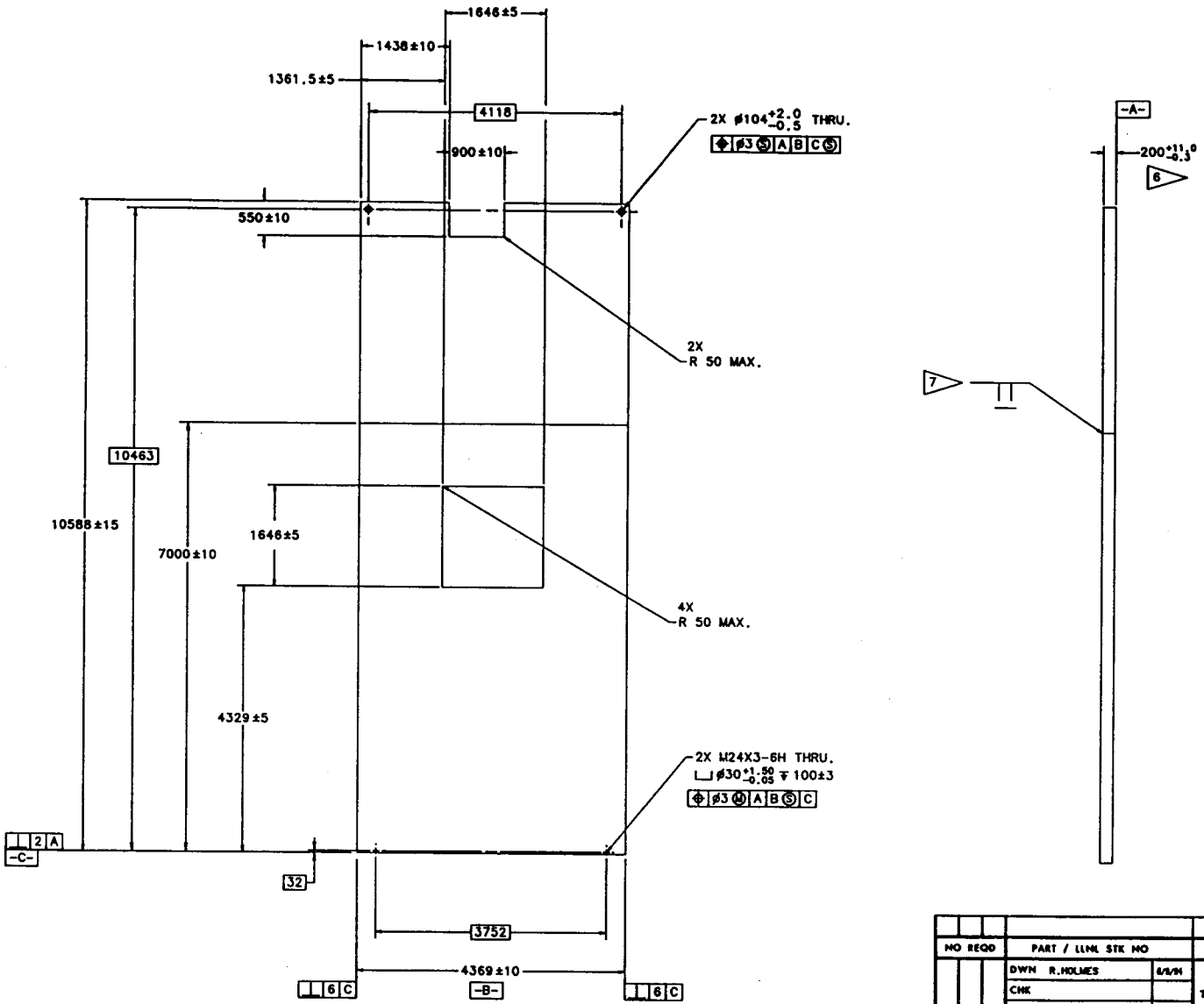

NOTES
UNLESS OTHERWISE SPECIFIED:

1. ALL DIMENSIONS ARE IN ~~INCHES~~ MM
2. DIMENSIONING AND TOLERANCING PER ANSI Y14.5M-1982.
3. SURFACE TEXTURE PER ANSI B46.1-1978.
4. 3.2 ALL MACHINED SURFACES.
5. BREAK SHARP EDGES, CHAM. OR R 1 TO 2MM
6. ROLLED PLATE TO BE FLAT OVER FULL WIDTH AND LENGTH WITHIN 40mm. THIS TOLERANCE INCLUDES THICKNESS TOLERANCE AND IS TO BE MEASURED WITH THE UNRESTRAINED PLATE RESTING ON A FLAT HORIZONTAL SURFACE.
7. PART CAN BE MADE UP OF TWO PIECES JOINED BY FULL PENETRATION WELDING. (WELD CAN BE UNDERFLUSH BY 5mm MAX.) PART MUST BE FLAT AFTER WELDING PER TOLERANCES SPECIFIED IN NOTE 6.
8. PROVISIONS FOR LIFTING AND TURN OVER OF PART MAY BE ADDED WITH LLNL APPROVAL
9. APPROXIMATE WEIGHT: 81 ENGLISH TONS

NO REQD	PART / LLNL STK NO	DESCRIPTION / MATERIAL	SPEC NO	ITEM
		STEEL	ASTM A36	

DWN R.HOLMES 6/1/94
CHK
APVD
CLASSIFIED BY:
TITLE
DATE

LAWRENCE LIVERMORE NATIONAL LABORATORY
MECHANICAL ENGINEERING DEPT
UNIVERSITY OF CALIFORNIA

CLASSIFICATION
THIS DOCUMENT IS THE PROPERTY OF THE UNIVERSITY OF CALIFORNIA LAWRENCE LIVERMORE LABORATORY. PRODUCTION PROHIBITED WITHOUT PERMISSION OF THE MECHANICAL ENGINEERING DEPARTMENT.

MAJOR UNIT: RELATIVISTIC HEAVY ION COLLIDER (RHIC)
SUBASSY: PHENIX MUON PISTON MAGNET
DETAIL: PLATE, MUON IDENTIFIER
SHOWN ON AAA
ACCT NO
DRAWING NO: AAA94-101074-00
SCALE: NONE
SHEET 1 OF 1

LTR	DWN	CHK	APVD	DATE	ZONE	CHANGE

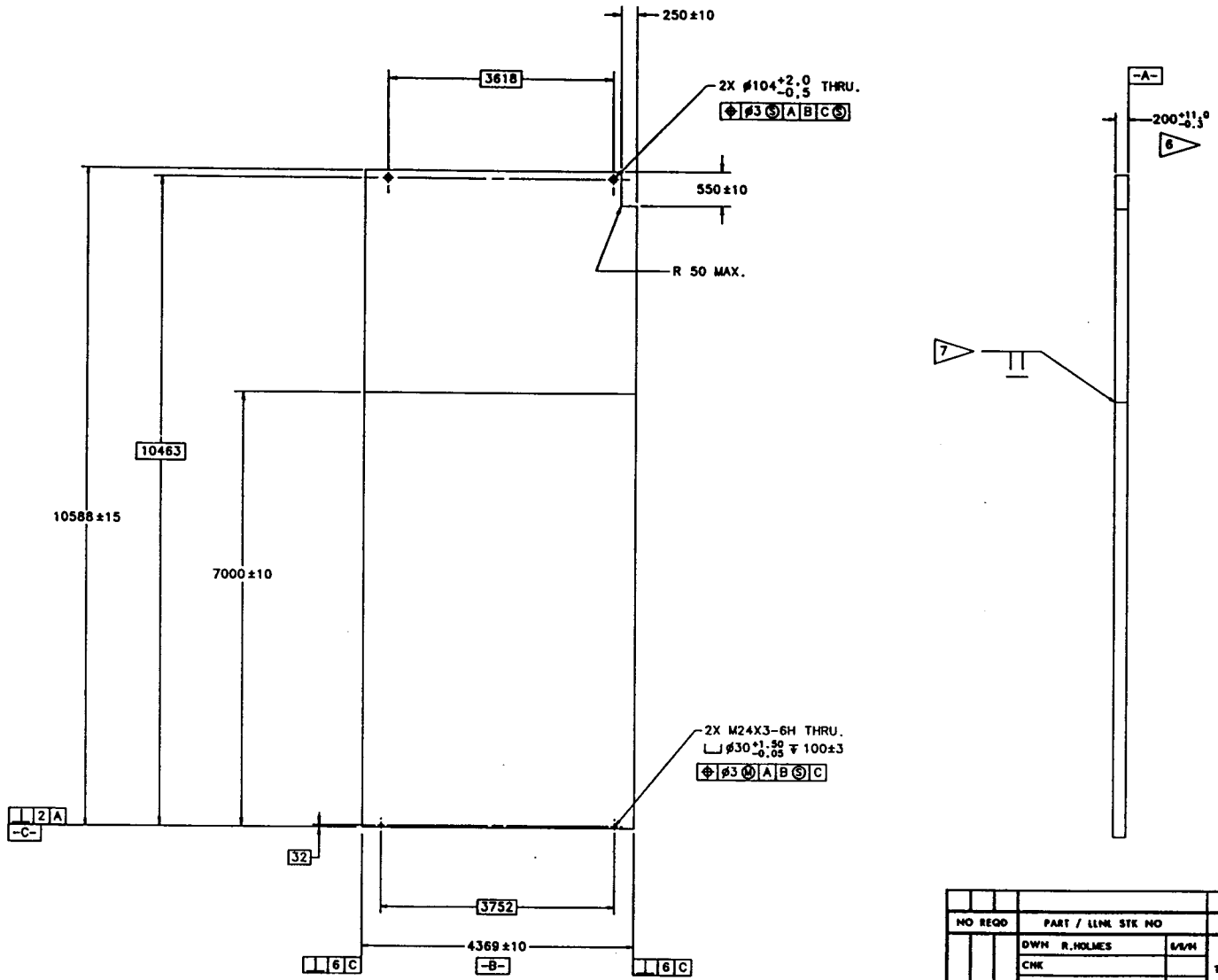

NOTES
UNLESS OTHERWISE SPECIFIED:

1. ALL DIMENSIONS ARE IN ~~INCHES~~ MM
2. DIMENSIONING AND TOLERANCING PER ANSI Y14.5M-1982.
3. SURFACE TEXTURE PER ANSI B46.1-1978.
4. 3.2 ALL MACHINED SURFACES.
5. BREAK SHARP EDGES, CHAM. OR R 1 TO 2MM
6. ROLLED PLATE TO BE FLAT OVER FULL WIDTH AND LENGTH WITHIN 40mm. THIS TOLERANCE INCLUDES THICKNESS TOLERANCE AND IS TO BE MEASURED WITH THE UNRESTRAINED PLATE RESTING ON A FLAT HORIZONTAL SURFACE.
7. PART CAN BE MADE UP OF TWO PIECES JOINED BY FULL PENETRATION WELDING. (WELD CAN BE UNDERFLUSH BY 5mm MAX.) PART MUST BE FLAT AFTER WELDING PER TOLERANCES SPECIFIED IN NOTE 6.
8. PROVISIONS FOR LIFTING AND TURN OVER OF PART MAY BE ADDED WITH LLNL APPROVAL
9. APPROXIMATE WEIGHT: 81 ENGLISH TONS

NO REQD	PART / LLNL STK NO	DESCRIPTION / MATERIAL	SPEC NO	ITEM
		STEEL	ASTM A36	

DWN R.HOLMES	6/9/94	
CHK		
APVD		
CLASSIFIED BY:		
TITLE	DATE	

LAWRENCE LIVERMORE NATIONAL LABORATORY
MECHANICAL ENGINEERING DEPT
UNIVERSITY OF CALIFORNIA

CLASSIFICATION

THIS DOCUMENT IS THE PROPERTY OF THE UNIVERSITY OF CALIFORNIA LAWRENCE LIVERMORE LABORATORY. PRODUCTION PROHIBITED WITHOUT PERMISSION OF THE MECHANICAL ENGINEERING DEPARTMENT.

MAJOR UNIT: RELATIVISTIC HEAVY ION COLLIDER (RHIC)
SUBASSY: PHENIX MUON PISTON MAGNET
DETAIL: PLATE, MUON IDENTIFIER
SHOWN ON AAA
ACCT NO
DRAWING NO: AAA94-101075-00
SCALE: NONE
SHEET 1 OF 1

LTR	DWN	CHK	APVD	DATE	ZONE	CHANGE

Base Plates

- Base plate divided into 3 sub-plates
- Each ID plate rests on only one base plate
- 80 mm thick; bottom of bases plates nominally at floor level
- 1-3 inches of concrete removed for grout
- Each plate supported on 10 jacking screws prior to grout injection
- Eight holddown studs per base plate
- Two grout injection holes per base plate
- Adjacent base plates connected by steel bars

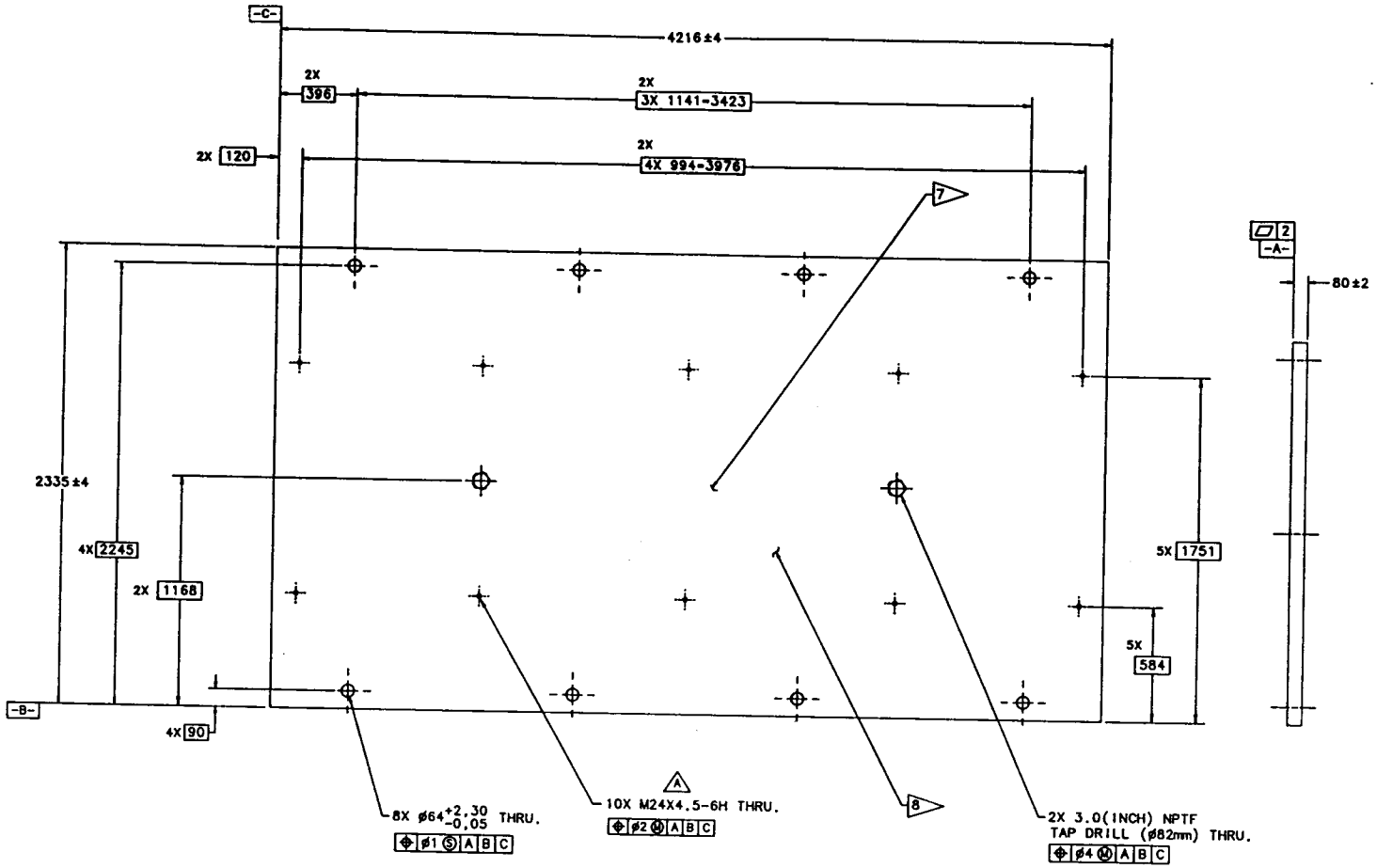

NOTES
UNLESS OTHERWISE SPECIFIED:

1. ALL DIMENSIONS ARE IN ~~INCHES~~ MM
2. DIMENSIONING AND TOLERANCING PER ANSI Y14.5M-1982.
3. SURFACE TEXTURE PER ANSI B46.1-1978.
4. 3.2/ALL MACHINED SURFACES.
5. BREAK SHARP EDGES, CHAM. OR R 1 TO 2MM
6. PAINT WITH A ZINC CHROMATE PRIMER, KELLY-MOORE NO. 1710, OR EQUIVALENT.
7. STENCIL THE WORDS "THIS SIDE UP" WITH 50mm CHARACTERS, IN WHITE PAINT, APPROXIMATELY WHERE INDICATED.
8. SCRIBE OR STAMP DRAWING NUMBER AND REVISION LETTER APPROXIMATELY WHERE SHOWN IN 10mm HIGH CHARACTERS.

LTR	DWN	CHK	APVD	DATE	ZONE	CHANGE
B	RHH			6/16/94		WAS 1942 WIDE & HOLES REVISED
A	RHH			6/7/94	5B	10 M24 HOLES ADDED

NO REQD	PART / LLNL STK NO	DESCRIPTION / MATERIAL	SPEC NO	ITEM
		STEEL	ASTM A36	

DWN R. HOLMES 3/22/94
CHK
APVD
CLASSIFIED BY
TITLE DATE

LAWRENCE LIVERMORE NATIONAL LABORATORY
MECHANICAL ENGINEERING DEPT
UNIVERSITY OF CALIFORNIA

CLASSIFICATION
THIS DOCUMENT IS THE PROPERTY OF THE UNIVERSITY OF CALIFORNIA LAWRENCE LIVERMORE LABORATORY. PRODUCTION PROHIBITED WITHOUT PERMISSION OF THE MECHANICAL ENGINEERING DEPARTMENT.

MAJOR UNIT: RELATIVISTIC HEAVY ION COLLIDER (RHIC)
SUBASSY: PHENIX MUON PISTON MAGNET
DETAIL: FLOORPLATE, INNER, MUON I.D.
SHOWN ON AAA 94-101080
ACCT NO 8884-25
DRAWING NO AAA94-101065-0B
SCALE NONE
SHEET 1 OF 1

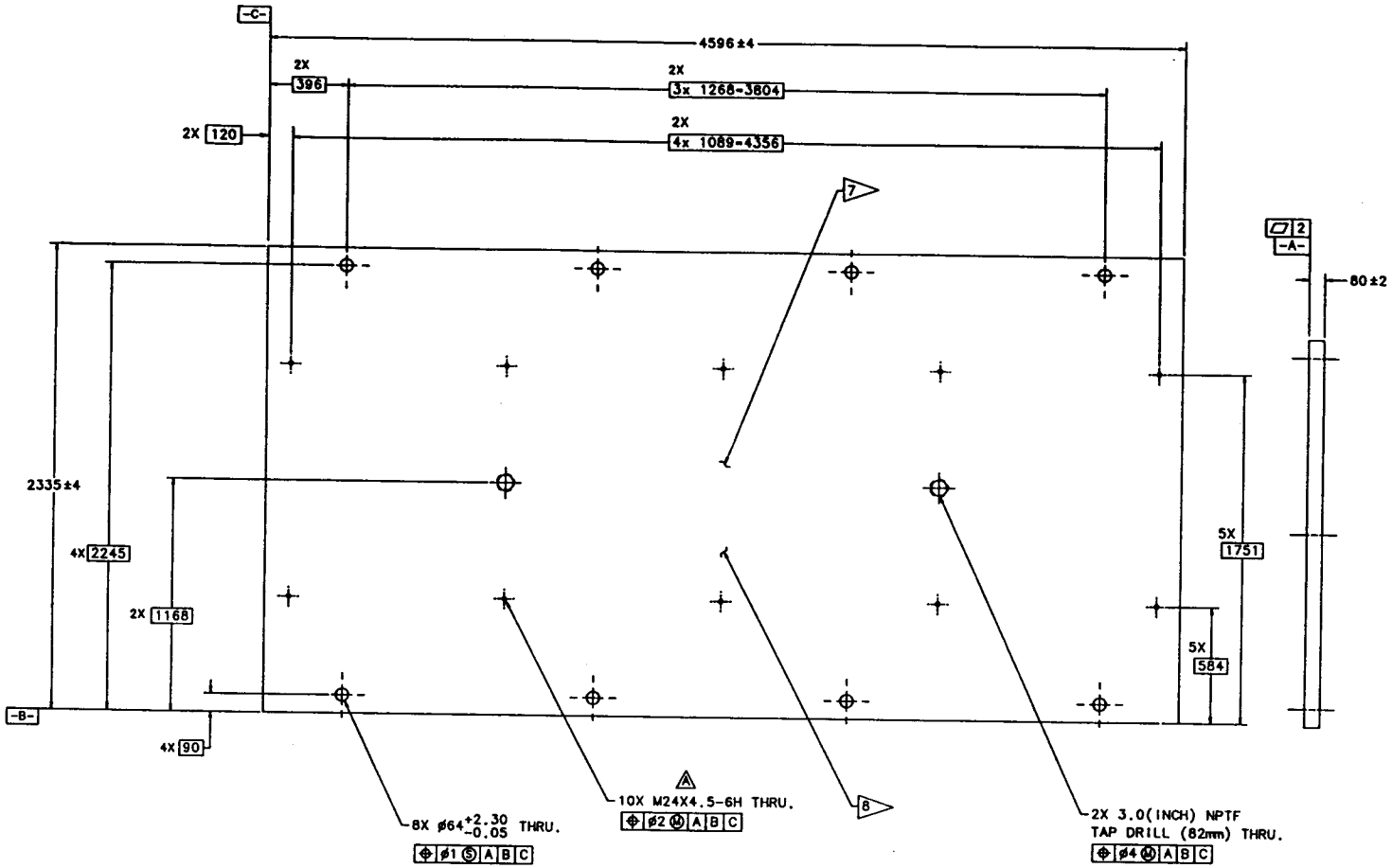

NOTES
UNLESS OTHERWISE SPECIFIED:

1. ALL DIMENSIONS ARE IN ~~INCHES~~: MM
2. DIMENSIONING AND TOLERANCING PER ANSI Y14.5M-1982.
3. SURFACE TEXTURE PER ANSI B46.1-1978.
4. 3.2 ALL MACHINED SURFACES.
5. BREAK SHARP EDGES, CHAM. OR R 1 TO 2MM
6. PAINT WITH A ZINC CHROMATE PRIMER, KELLY-MOORE NO. 1710, OR EQUIVALENT.
7. STENCIL THE WORDS "THIS SIDE UP" WITH 50mm CHARACTERS, IN WHITE PAINT, APPROXIMATELY WHERE INDICATED.
8. SCRIBE OR STAMP DRAWING NUMBER AND REVISION LETTER APPROXIMATELY WHERE SHOWN IN 10mm HIGH CHARACTERS.

LTR	DWN	CHK	APVD	DATE	ZONE	CHANGE
B	RHH			3/13/94		WAS 1942 X 4496 & HOLES REVISED
A	RHH			1/7/94	B6	10 M24 HOLES ADDED

NO REQD	PART / LLNL STK NO	DESCRIPTION / MATERIAL	SPEC NO	ITEM
		STEEL	ASTM A36	

DWN R.HOLMES 3/22/94
CHK
APVD
CLASSIFIED BY
TITLE DATE

LAWRENCE LIVERMORE NATIONAL LABORATORY
MECHANICAL ENGINEERING DEPT
UNIVERSITY OF CALIFORNIA

CLASSIFICATION
THIS DOCUMENT IS THE PROPERTY OF THE UNIVERSITY OF CALIFORNIA LAWRENCE LIVERMORE LABORATORY. PRODUCTION PROHIBITED WITHOUT PERMISSION OF THE MECHANICAL ENGINEERING DEPARTMENT.

MAJOR UNIT: RELATIVISTIC HEAVY ION COLLIDER (RHIC)
SUBASSY: PHENIX MUON PISTON MAGNET
DETAIL: FLOORPLATE, OUTER, MUON I.D.
SHOWN ON AAA 94-101060
ACCT NO 8864-25
DRAWING NO AAA94-101061-0B
SCALE NONE
SHEET 1 OF 1

Positioning and Spacer Blocks

- Used during installation for locating muon ID plates
- Upon completion they form earthquake restraint
- All positioning blocks are 2 inches thick (high)
- Positioning blocks on periphery are welded in place
- Positioning blocks between plates are tack welded in place and set screw through ID panels used to set spacing

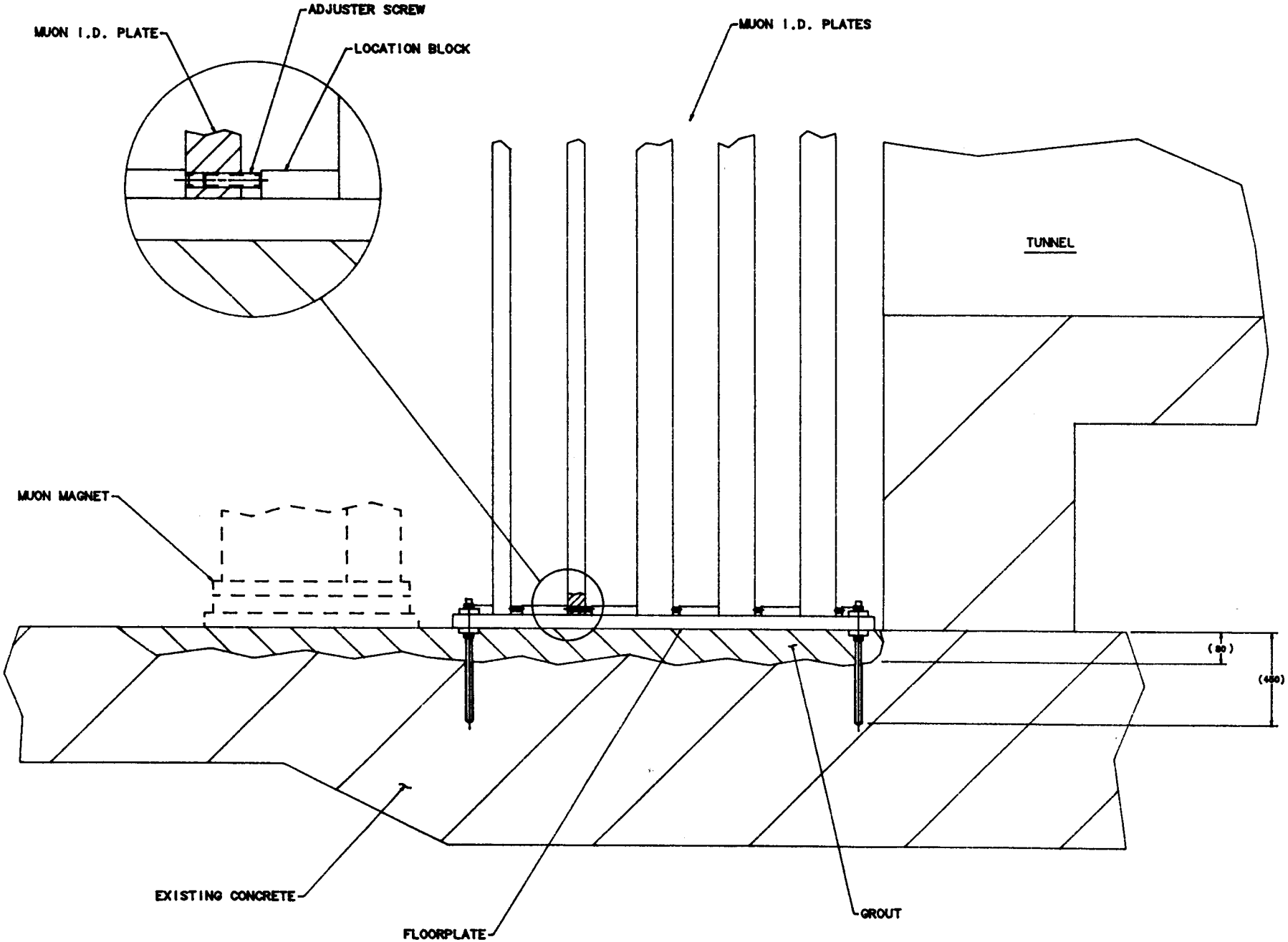
ADJUSTER SCREW
MUON I.D. PLATE
LOCATION BLOCK
MUON I.D. PLATES
TUNNEL
MUON MAGNET
(80)
(480)
EXISTING CONCRETE
FLOORPLATE
GROUT

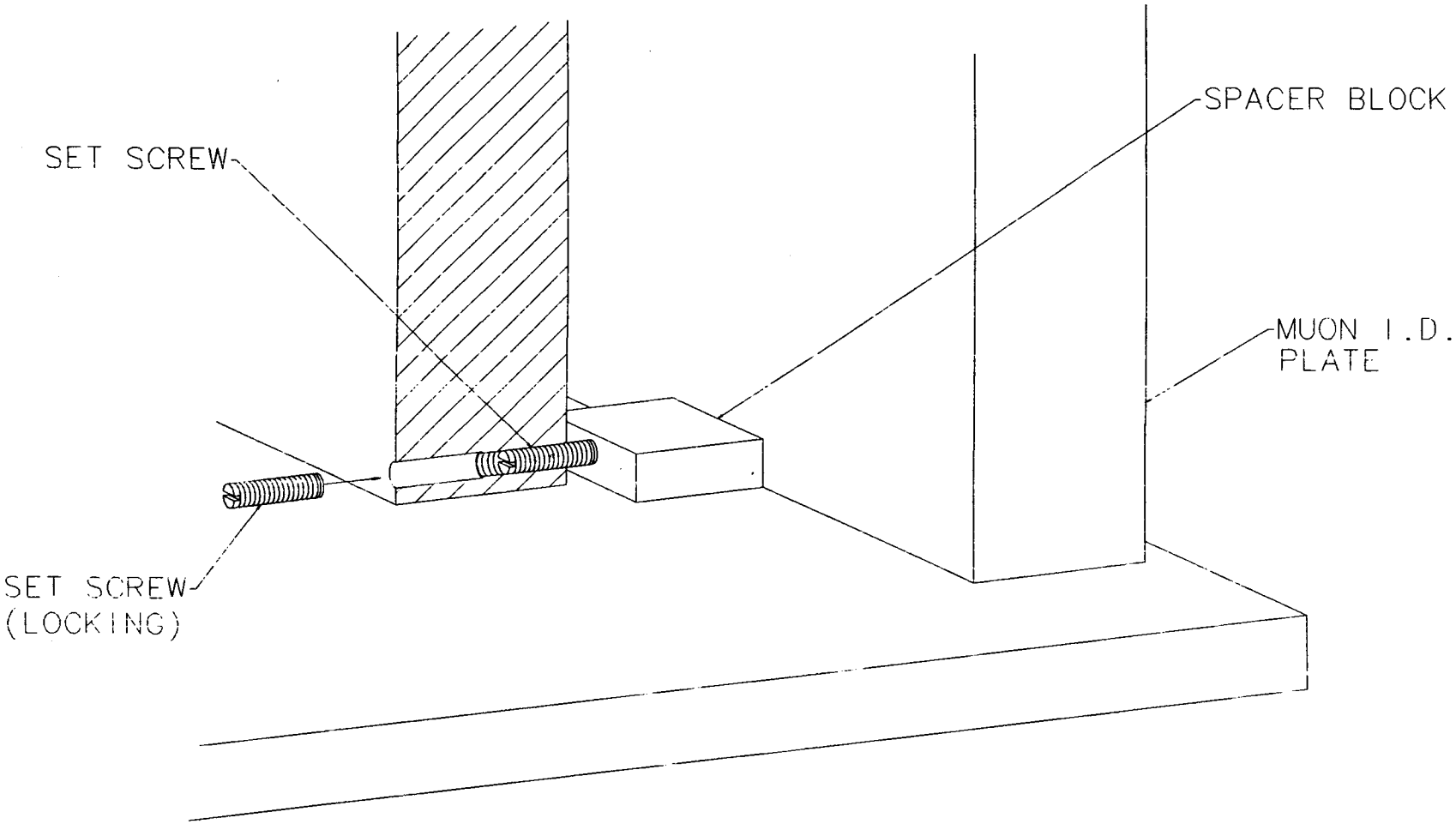

SET SCREWS FOR PLATE POSITIONING

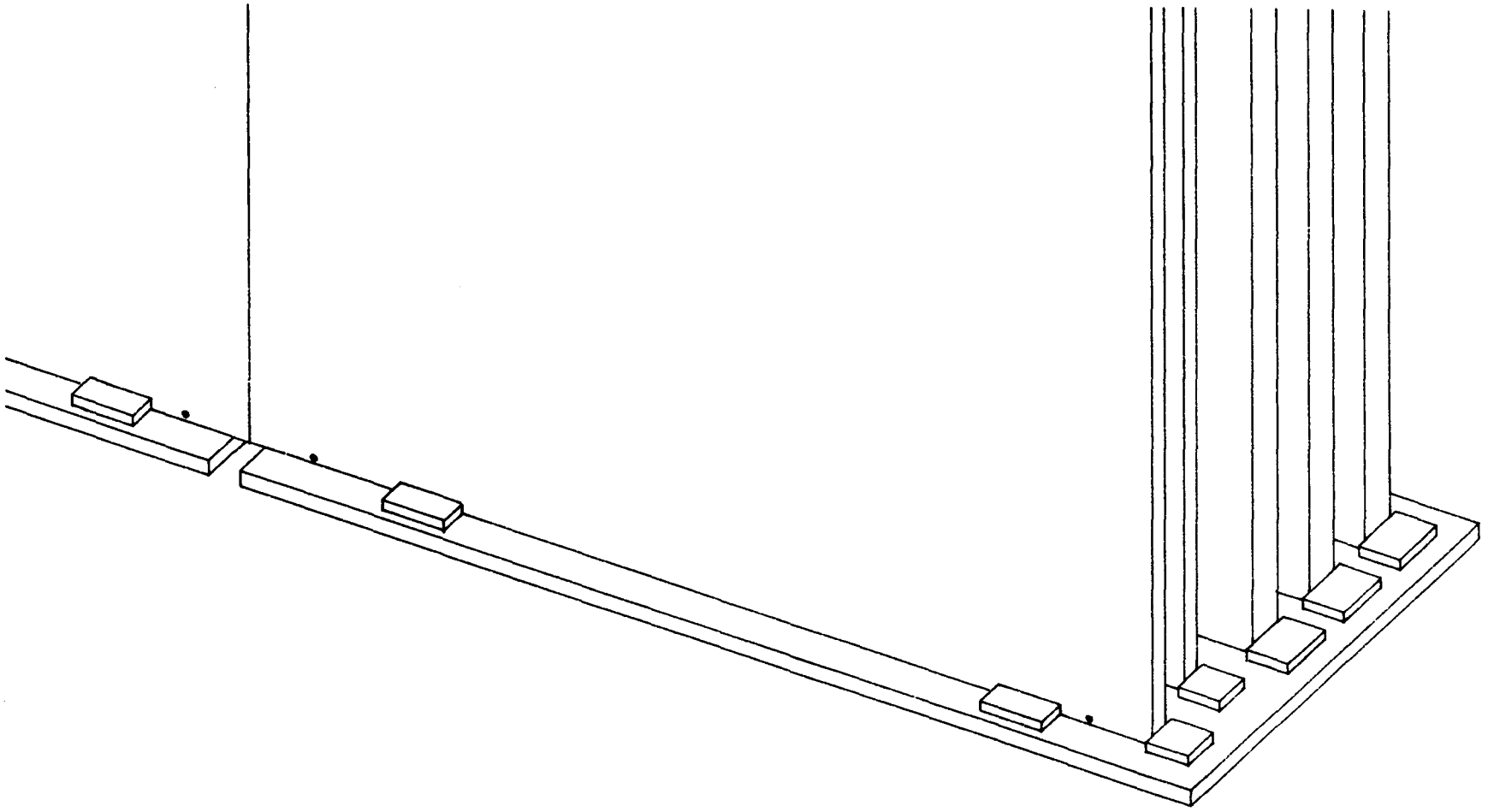

Installation Scenario

1. Install base plates
2. Install Hilti studs in wall for rod supports
3. Install detector rail hardware on wall
4. Install (weld) first row of stops (nearest wall)
5. Tilt up center plate for row 5 and position
6. Install rod supports (requires weld for mounting lug)
7. Repeat steps 5-6 for side plates
8. Install detector rail hardware to completed row
9. Install spacers at bottom between adjacent plates (requires fabrication and small weld)
10. Install spacer block for locating next row (requires small weld)
11. Repeat steps 5-10 for rows 4, 3 and 2
12. Repeat steps 5-9 for row 1
13. Install (weld) last row of stops (nearest muon magnet)
14. Install (weld) side stops for each row
15. Install (weld) top connector bars
16. Install (weld) base plate connector bars nearest muon magnet

Russian Fabrication Order

Includes:

- Steel panels (15 total)
- Muon ID base plates
- Rod support brackets

- Muon magnet base plates

Does not include:

- Spacer blocks and stops
- Connector bars for panels and base plates
- Support rods

Cost

- Estimate of alternative to Russian fabrication is approximately $656,000 plus $201,000 for shipping to POE and import duty
- Instructed Russians that their price can not exceed $328,000 plus shipping to POE and import duty
- Vladimir has asked whether it can be increased above $328,000

Outstanding Issues

- Wall flatness
- Vacuum pump removal past DX magnet
- Design of bars connecting adjacent base plates
- Assembly/installation drawing