11-Jul-96

NOTES
UNLESS OTHERWISE SPECIFIED:

1. ALL DIMENSIONS ARE IN MILLIMETERS/INCHES.
2. DIMENSIONING AND TOLERANCING PER ANSI Y14.5M-1982.
3. SURFACE TEXTURE PER ANSI B46.1-1985. SURFACE TEXTURE SYMBOLS PER ANSI Y14.36-1978.

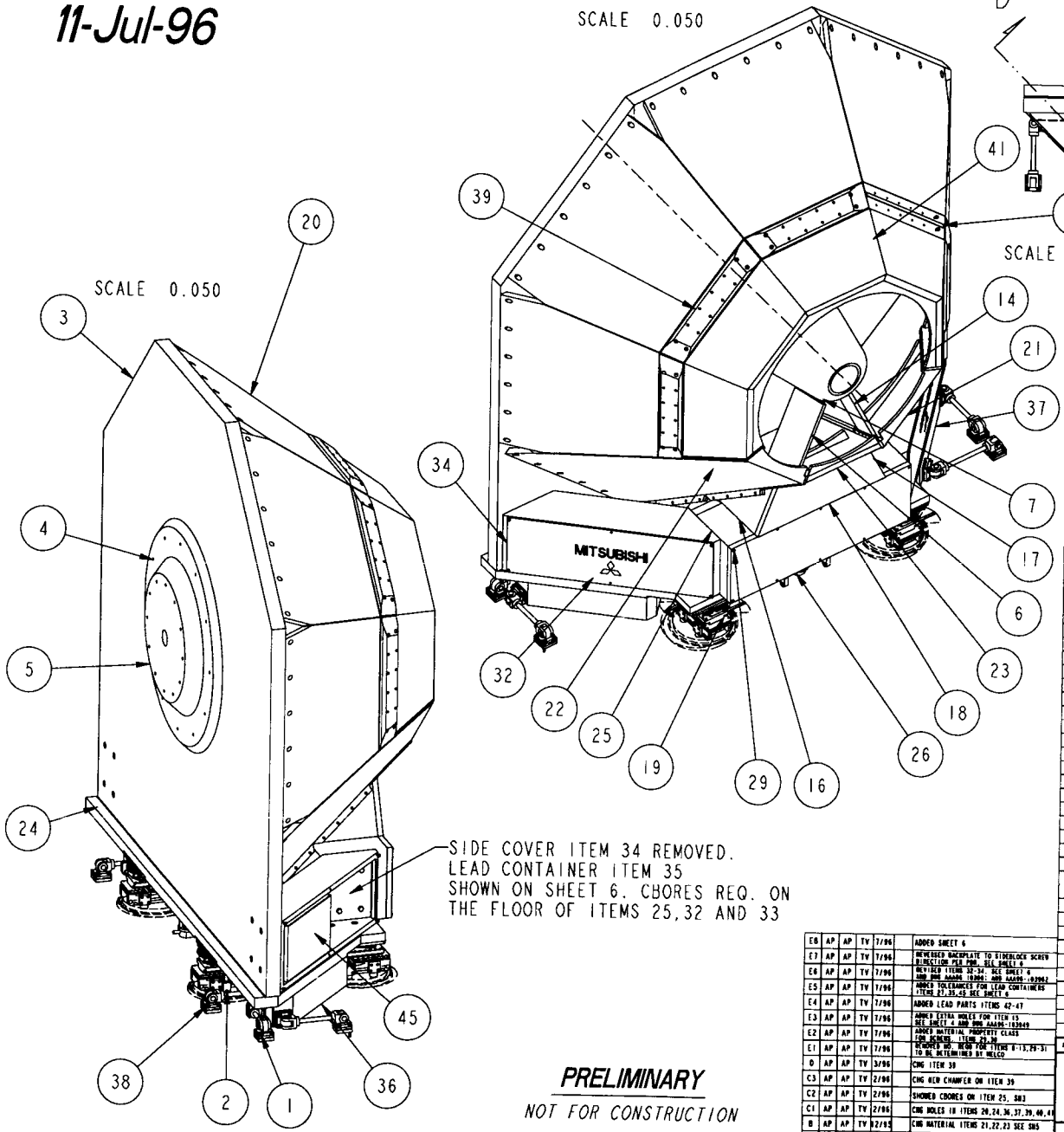

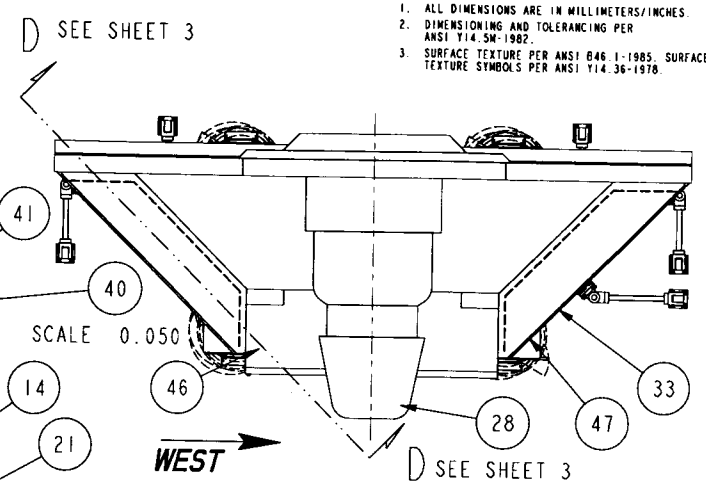

ITEM	SPEC NO	DESCRIPTION / MATERIAL	PART / LLNL STK NO	NO REQD
47		ZZS_SIDELEAD / LEAD BRICKS - LLNL	LLNL	2
46		ZZS_MIDLEAD / LEAD BRICKS - LLNL	LLNL	1
45		ZMS_SIDELEADCONTNRIM / STL 1006	LLNL AAA96-XXXXXX	2
44	DIN 912 8.8	ZMS_M6SOCH025 / ALLOY STL SOCHDCAP SCR M6X25LG CLASS 8.8	BOSSARD BN 3 M6x25	-
43		ZMS_LEADLID2 / STL 1006	LLNL AAA96-XXXXXX	3
42		ZMS_LEADLID / ASTM A36	LLNL AAA96-XXXXXX	4
41		MMS_TEACUP /	MMN REF 93-104173	1
40		MMS_TCUPSPACR / STL 1006	MMN REF 94-104176	5
39		MMS_SPLICEBAR / STL 1006	MMN REF 93-104175	5
38		MMS_SM_ZTIEDOWNS / ZAXIS HORIZONTAL RESTRAINTS - LLNL	LLNL AAA96-XXXXXX TAB A/R	-
37		MMS_SIDEWTWEST / STL 1006	MITSUBISHI	1
36		MMS_SIDEWTEAST / STL 1006	MITSUBISHI	1
35		MMS_SIDELEADCONTNR1 / STL 1006	LLNL AAA96-XXXXXX	2
34		MMS_SIDECOVER2 / STL 1006	MITSUBISHI	2
33		MMS_SIDEBLOCK10B / STL 1006	MITSUBISHI	1
32		MMS_SIDEBLOCK10A / STL 1006	MITSUBISHI	1
31		MMS_SCRWASHERM36 / STL. ZINC PLATE M36 WASHER	MITSUBISHI SPEC	-
30	DIN 912 10.9	MMS_SCRM36 / ALLOY STL SOCHD CAP SCR M36 CLASS 10.9	MITSUBISHI SPEC.	-
29	DIN 912 10.9	MMS_SCRM24 / ALLOY STL SOCHD CAP SCR M24 CLASS 10.9	MITSUBISHI SPEC.	-
28		MMS_PISTON / STL 1006	MMN REF 93-101860	1
27		MMS_MLEADCONTR2 / STL 1006	LLNL AAA96-XXXXXX	3
26		MMS_MIDCOVR10 / STL 1006	MITSUBISHI	1
25		MMS_MIDBLOCK10 / STL 1006	MITSUBISHI	1
24		MMS_LOWPLATE9A / STL 1006	MITSUBISHI	1
23		MMS_LAMPLOWPAN4 / STL 1006 - SST 304L	MMN REF 93-101893	1
22		MMS_LAMPLOWPAN3M / STL 1006 - SST 304L	MMN REF 93-101891	1
21		MMS_LAMPLOWPAN3 / STL 1006 - SST 304L	MMN REF 93-101891	1
20		MMS_LAMP2PAN / STL 1006	MMN REF 93-101890	5
19		MMS_MILASM7 / STL ASTM A36 OR EQUIV	MILMAN 200-XTDWC-96031	4
18		MMS_GUSPLATE10 / STL 1006	MITSUBISHI	1
17		MMS_GUS10B / STL 1006	MITSUBISHI	1
16		MMS_GUS10A / STL 1006	MITSUBISHI	1
15		MMS_FLATJACKASM2 / RSM-1500 ENERPAC HYDRAULIC CYLINDER	LLNL AAA96-XXXXXX	2
14		MMS_FINWEST / SST 310	MMN REF 93-104157	1
13		MMS_FINSTUD / SST .75IN OR M20 STUD X 89mm	MITSUBISHI SPEC.	-
12		MMS_FINSPHERWASH / STL SPHER WASH. 251D x 59.81D x 12.7THK	MITSUBISHI SPEC	-
11		MMS_FINM24WASHER / STL. ZINC PLATE	MITSUBISHI SPEC	-
10		MMS_FINM24SCR / STL. M24 HEX HD SCR x 100mm	MITSUBISHI SPEC.	-
9		MMS_FINM24NUT / STL M24 NUT	MITSUBISHI SPEC.	-
8		MMS_FINM20NUT / SST .75IN OR M20 NUT	MITSUBISHI SPEC.	-
7		MMS_FINLEVEL / SST LEVELING FOOT	CARR LANE CL-12-LF-S	14
6		MMS_FINEAST / SST 310	MMN REF 93-104157	1
5		MMS_DONUT3M / STL 1006	MMN REF 93-101864	1
4		MMS_DONUT8TG / STL 1006	MMN REF 93-101864	1
3		MMS_BACPLATE / STL 1006	MMN REF 93-101886	1
2		AAY_RESTRAINT2 / YAXIS VERTICAL RESTRAINTS - LLNL	LLNL AAA96-XXXXXX	10
1		AAA_TIEDOWNS_X2 / XAXIS HORIZONTAL RESTRAINTS - LLNL	LLNL AAA96-XXXXXX TAB A/R	-

LTR	DSN	CHK	APVD	DATE	ZONE	CHANGE
E8	AP	AP	TV	7/96		ADDED SHEET 6
E7	AP	AP	TV	7/96		REVERSED BACKPLATE TO SIDEBLOCK SCREW DIRECTION PER PMS. SEE SHEET 6
E6	AP	AP	TV	7/96		REVISED ITEMS 32-34. SEE SHEET 6 ADD DWG AAA96-102061; ADD AAA96-102062
E5	AP	AP	TV	7/96		ADDED TOLERANCES FOR LEAD CONTAINERS ITEMS 27,35,45 SEE SHEET 6
E4	AP	AP	TV	7/96		ADDED LEAD PARTS ITEMS 42-47
E3	AP	AP	TV	7/96		ADDED EXTRA HOLES FOR ITEM 15 SEE SHEET 4 ADD DWG AAA96-103049
E2	AP	AP	TV	7/96		ADDED MATERIAL PROPERTY CLASS FOR DENSITY ITEM 32-35
E1	AP	AP	TV	7/96		REMOVED NO. REQD FOR ITEMS 8-13,29-31 TO BE DETERMINED BY MELCO
D	AP	AP	TV	3/96		CHG ITEM 38
C3	AP	AP	TV	2/96		CHG NEW CHAMFER ON ITEM 39
C2	AP	AP	TV	2/96		SHOWED CBORES ON ITEM 25, SH3
C1	AP	AP	TV	2/96		CHG HOLES IN ITEMS 20,24,36,37,39,40,41
B	AP	AP	TV	12/95		CHG MATERIAL ITEMS 21,22,23 SEE SH5
A	AP	AP	TV	11/95		CHANGED ITEMS 25,26,28,32-35

PRELIMINARY

NOT FOR CONSTRUCTION

DWN POSEY	11/95	
CHK VERCELLI	11/95	
APVD YAMAMOTO	11/95	
CLASSIFIED BY:		
TITLE		DATE

LAWRENCE LIVERMORE NATIONAL LABORATORY
MECHANICAL ENGINEERING DEPT
UNIVERSITY OF CALIFORNIA

CLASSIFICATION

MAJOR UNIT: (8) TITLES CLASSIFICATION
RELATIVISTIC HEAVY ION COLLIDER

SUBASSY: *PHENIX MUON MAGNET SOUTH*

DETAIL: *MUON PISTON MAGNET SOUTH INSTALLATION*

DRAWING NO: AAA95-104779-0E

SCALE N/A — SHEET 1 OF 5

/home/ereddy/4/ari/phenix-assy/asm10/MMS_OPT10FINVU

PHENIX - SOUTH MUON MAGNET INSTALLATION

11-Jul-96

EAST PISTION FIN DETAIL

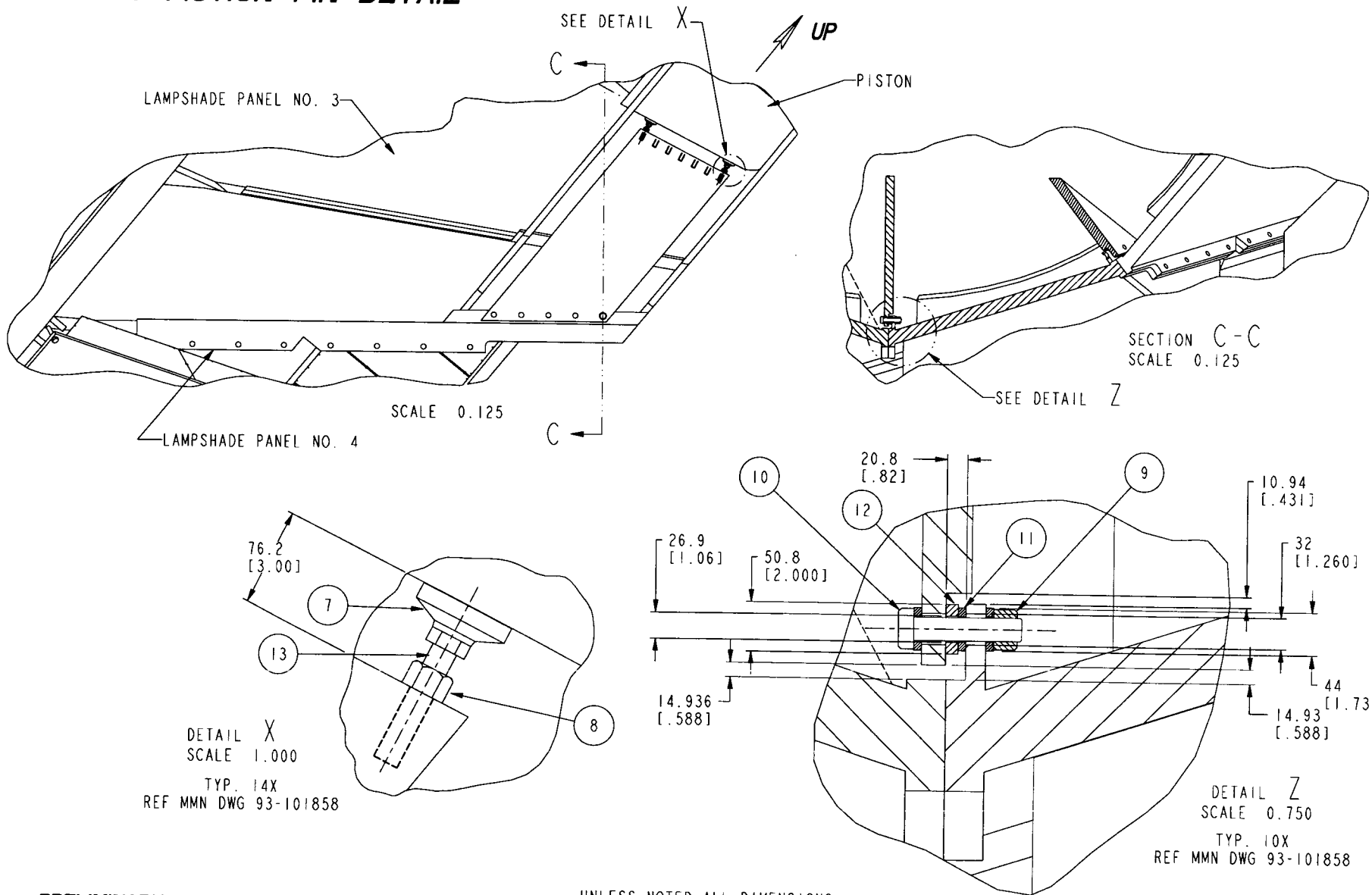

PRELIMINARY

NOT FOR CONSTRUCTION

UNLESS NOTED ALL DIMENSIONS
ARE IN MILLIMETERS / INCH

CLASSIFICATION	
UNCLASSIFIED	
DRAWING NO	AA95-104779-0E
SCALE N/A	SHEET 2 OF 5

PHENIX - SOUTH MUON MAGNET INSTALLATION

SUPPORT STRUCTURE DETAIL

11-Jul-96

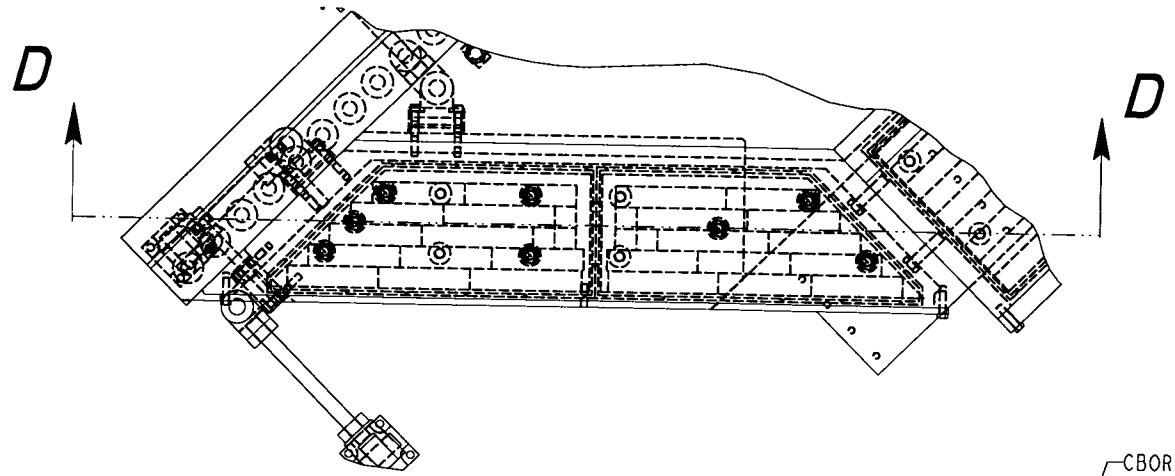

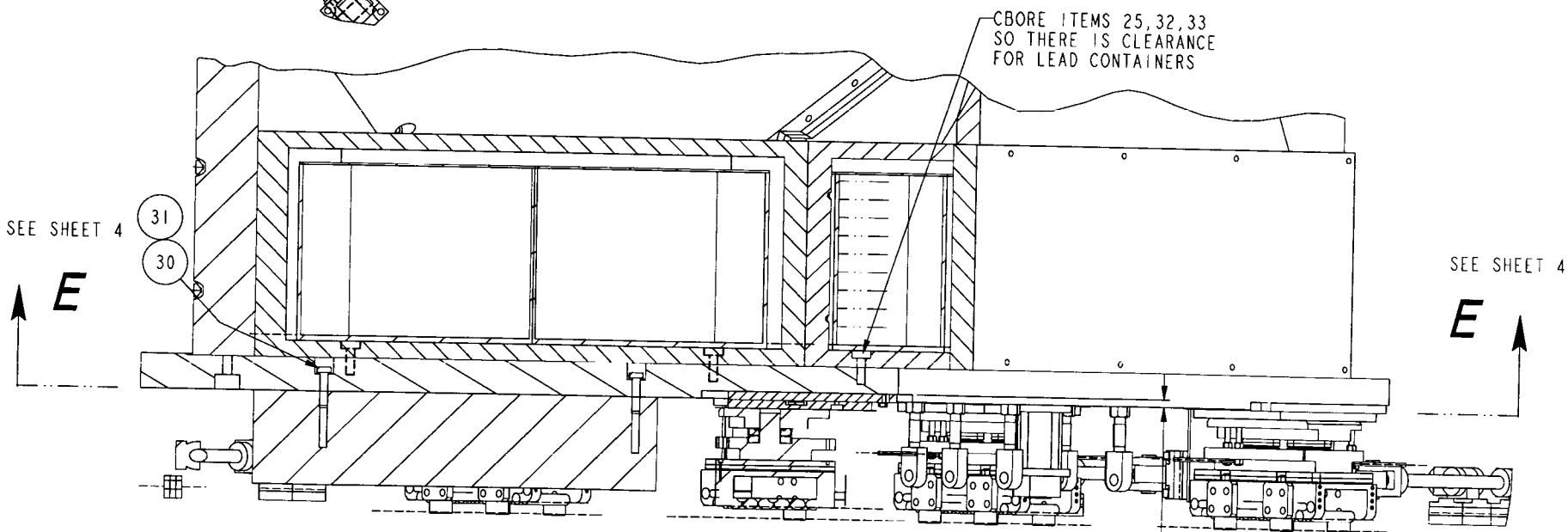

PRELIMINARY

NOT FOR CONSTRUCTION

SECTION D-D
SCALE 0.150

CLASSIFICATION	
UNCLASSIFIED	
	DRAWING NO AAA95-104779-0E
SCALE N/A	SHEET 3 OF 5

PHENIX - SOUTH MUON MAGNET ASSEMBLY

11-Jul-96

INTERNAL FLANGE MATERIAL

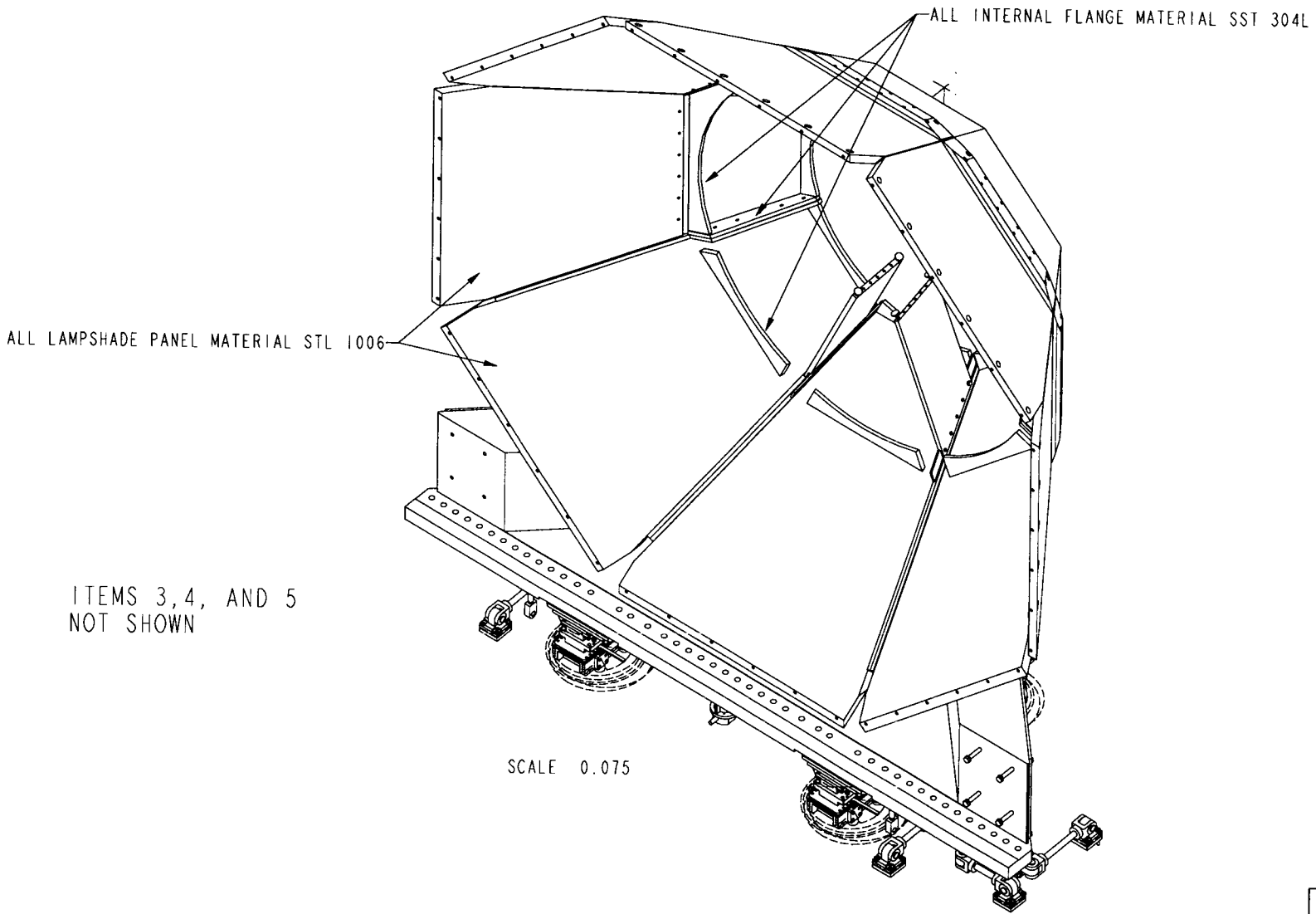

CLASSIFICATION	UNCLASSIFIED
DRAWING NO	AAA95-104779-0E
SCALE N/A	SHEET 5 OF 5

PHENIX - SOUTH MUON MAGNET INSTALLATION

11-Jul-96

LOWER SUPPORT PLATE DETAIL

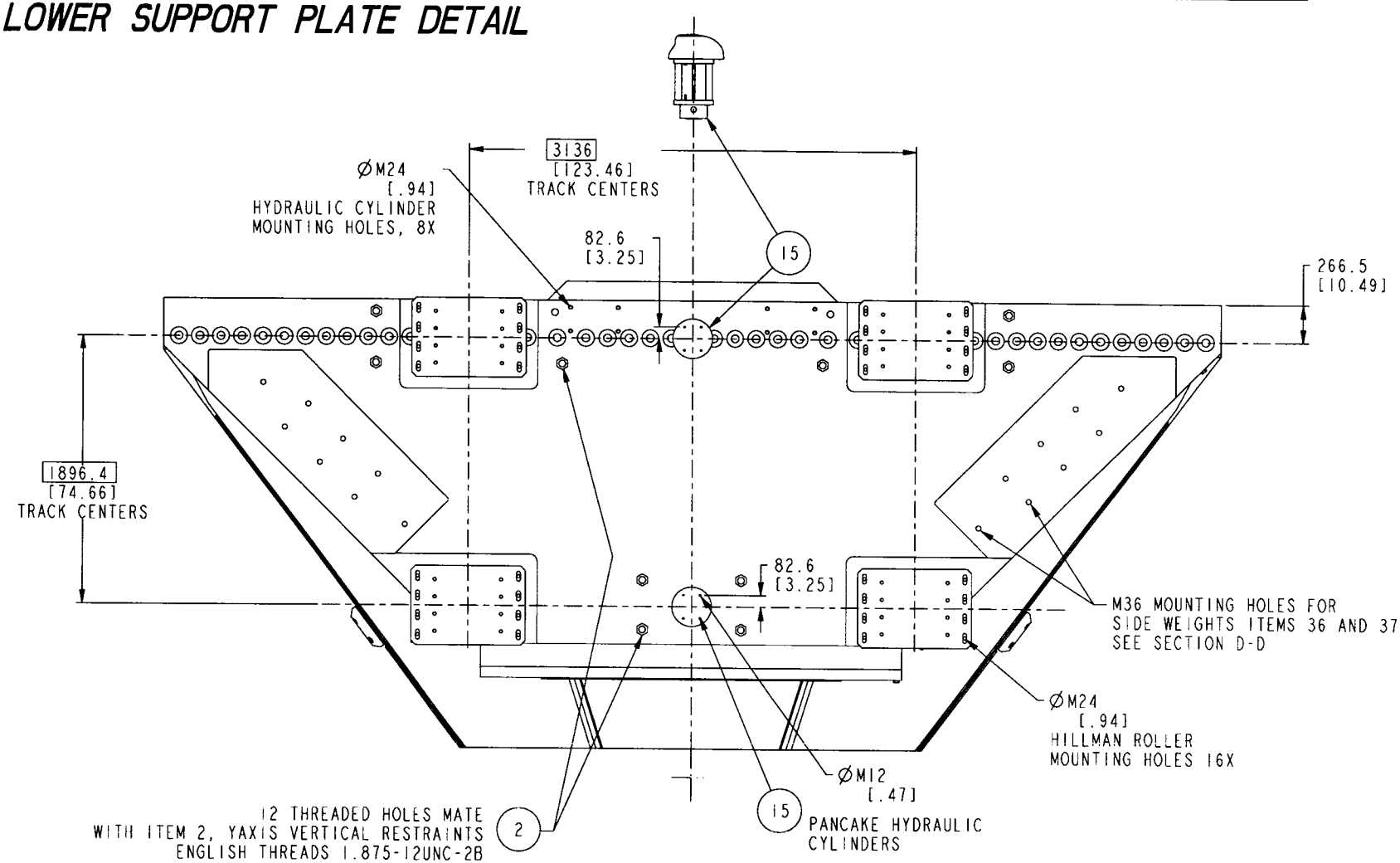

SECTION E-E
SCALE 0.100

PRELIMINARY

NOT FOR CONSTRUCTION

CLASSIFICATION
UNCLASSIFIED

DRAWING NO
AAA95-104779-0E

SCALE 500mm SHEET 4 OF 5

LEAD CONTAINER TOLERANCES AND SIDE BLOCK CHANGES

11-Jul-96

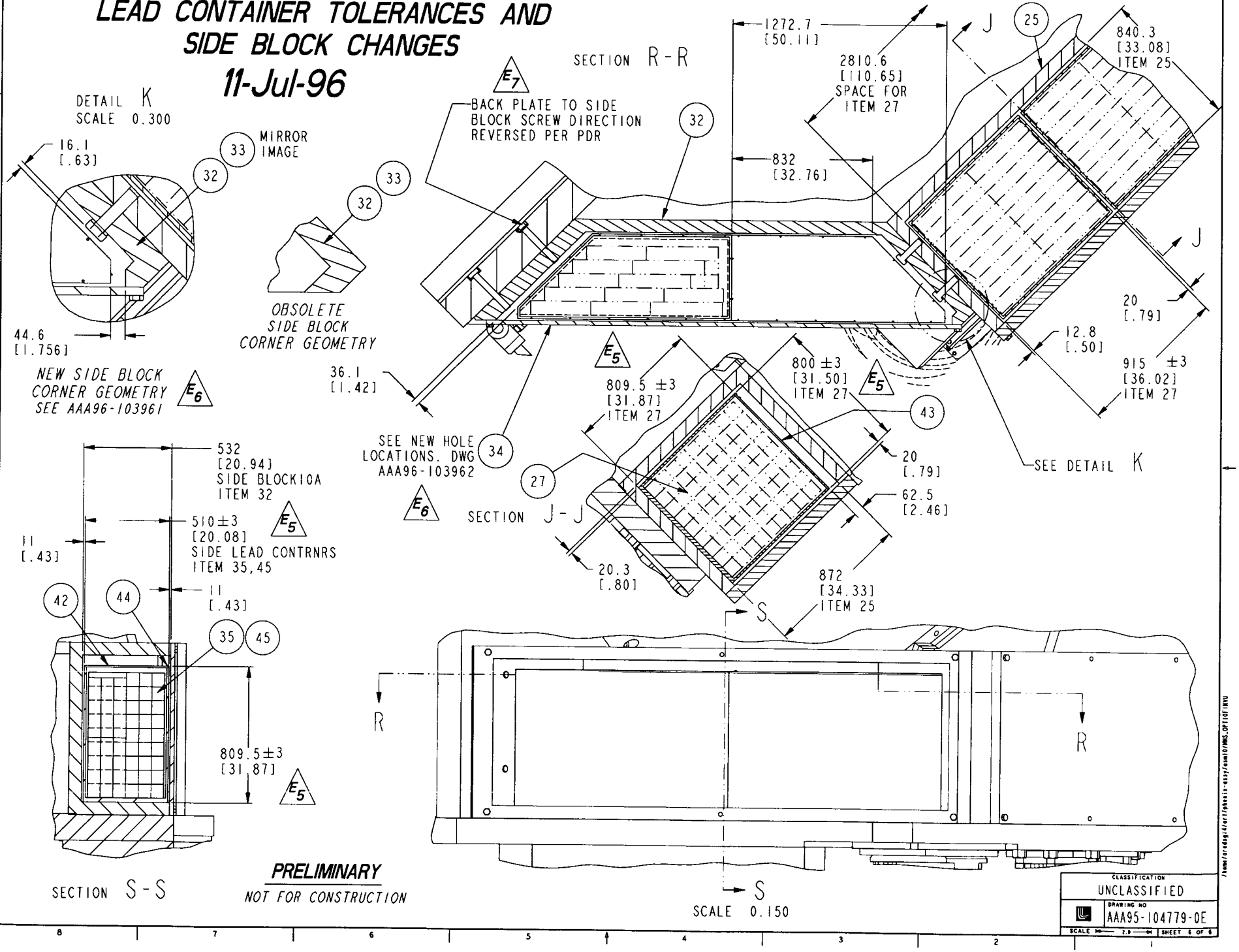

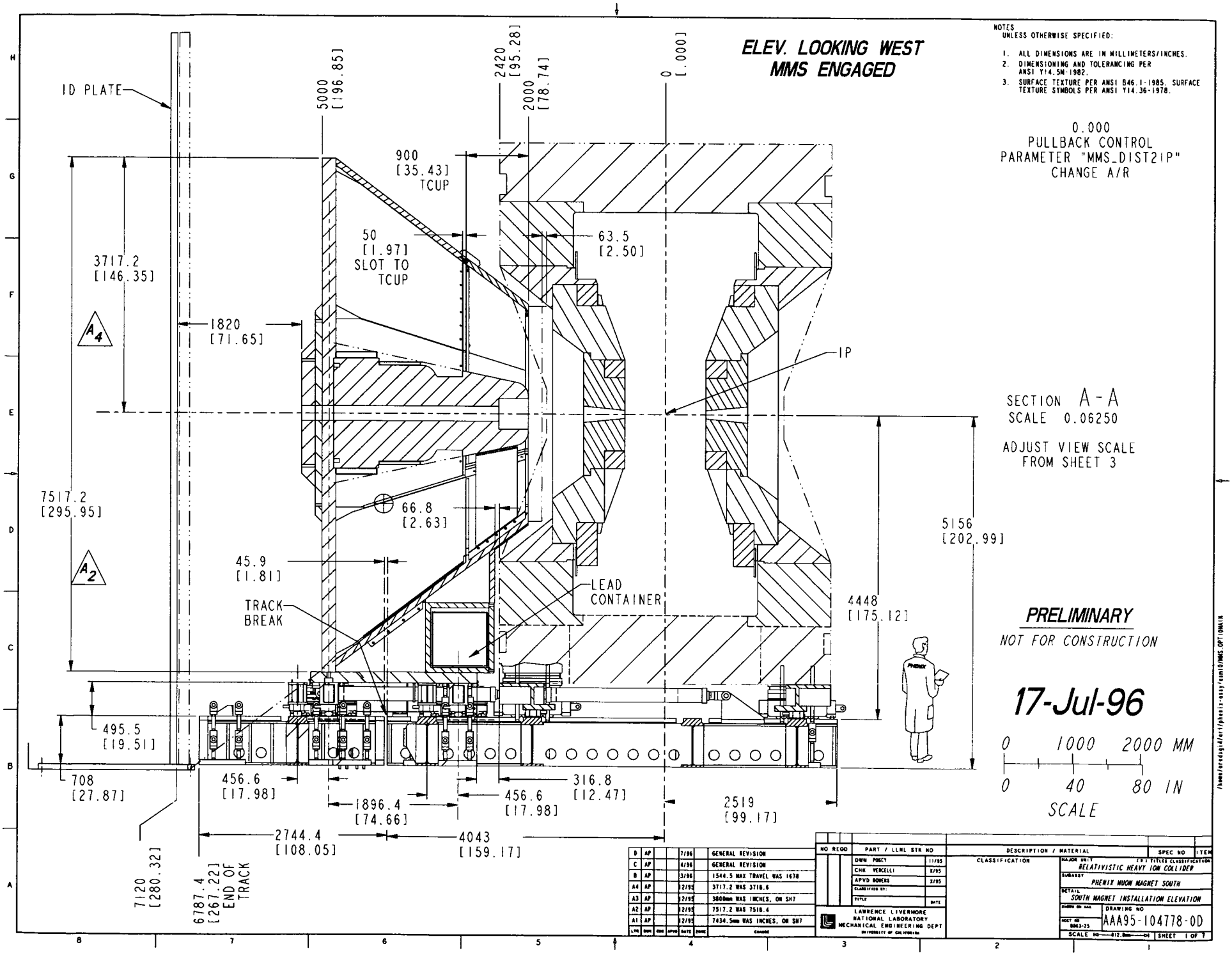
ELEV. LOOKING WEST
MMS ENGAGED
ID PLATE
5000 [196.85]
2420 [95.28]
2000 [78.74]
0 [.000]
900 [35.43] TCUP
50 [1.97] SLOT TO TCUP
63.5 [2.50]
3717.2 [146.35]
1820 [71.65]
IP
7517.2 [295.95]
66.8 [2.63]
45.9 [1.81]
TRACK BREAK
LEAD CONTAINER
5156 [202.99]
4448 [175.12]
495.5 [19.51]
708 [27.87]
456.6 [17.98]
1896.4 [74.66]
456.6 [17.98]
316.8 [12.47]
2519 [99.17]
2744.4 [108.05]
4043 [159.17]
7120 [280.32]
6787.4 [267.22] END OF TRACK
NOTES
UNLESS OTHERWISE SPECIFIED:
1. ALL DIMENSIONS ARE IN MILLIMETERS/INCHES.
2. DIMENSIONING AND TOLERANCING PER ANSI Y14.5M-1982.
3. SURFACE TEXTURE PER ANSI B46.1-1985. SURFACE TEXTURE SYMBOLS PER ANSI Y14.36-1978.
0.000
PULLBACK CONTROL
PARAMETER "MMS_DIST21P"
CHANGE A/R
SECTION A-A
SCALE 0.06250
ADJUST VIEW SCALE FROM SHEET 3
PRELIMINARY
NOT FOR CONSTRUCTION
17-Jul-96
0 1000 2000 MM
0 40 80 IN
SCALE
D AP 7/96 GENERAL REVISION
C AP 4/96 GENERAL REVISION
B AP 3/96 1544.5 MAX TRAVEL WAS 1678
A4 AP 12/95 3717.2 WAS 3718.6
A3 AP 12/95 3800mm WAS INCHES, ON SH7
A2 AP 12/95 7517.2 WAS 7518.4
A1 AP 12/95 7434.5mm WAS INCHES, ON SH7
LTR DWN CHK APVD DATE CHANGE
NO REQD
PART / LLNL STR NO
DESCRIPTION / MATERIAL
SPEC NO
ITEM
DWN POGCY 11/95
CHK VERCELLI 11/95
APVD BOWERS 11/95
CLASSIFIED BY:
TITLE
DATE
CLASSIFICATION
LAWRENCE LIVERMORE NATIONAL LABORATORY
MECHANICAL ENGINEERING DEPT
UNIVERSITY OF CALIFORNIA
MAJOR UNIT
EPI TITLES CLASSIFICATION
RELATIVISTIC HEAVY ION COLLIDER
SUBASSY
PHENIX MUON MAGNET SOUTH
DETAIL
SOUTH MAGNET INSTALLATION ELEVATION
DRAWING NO
AAA95-104778-0D
SCALE
SHEET 1 OF 7

PHENIX SOUTH MUON MAGNET

PLAN - ENGAGED

16-Jul-96

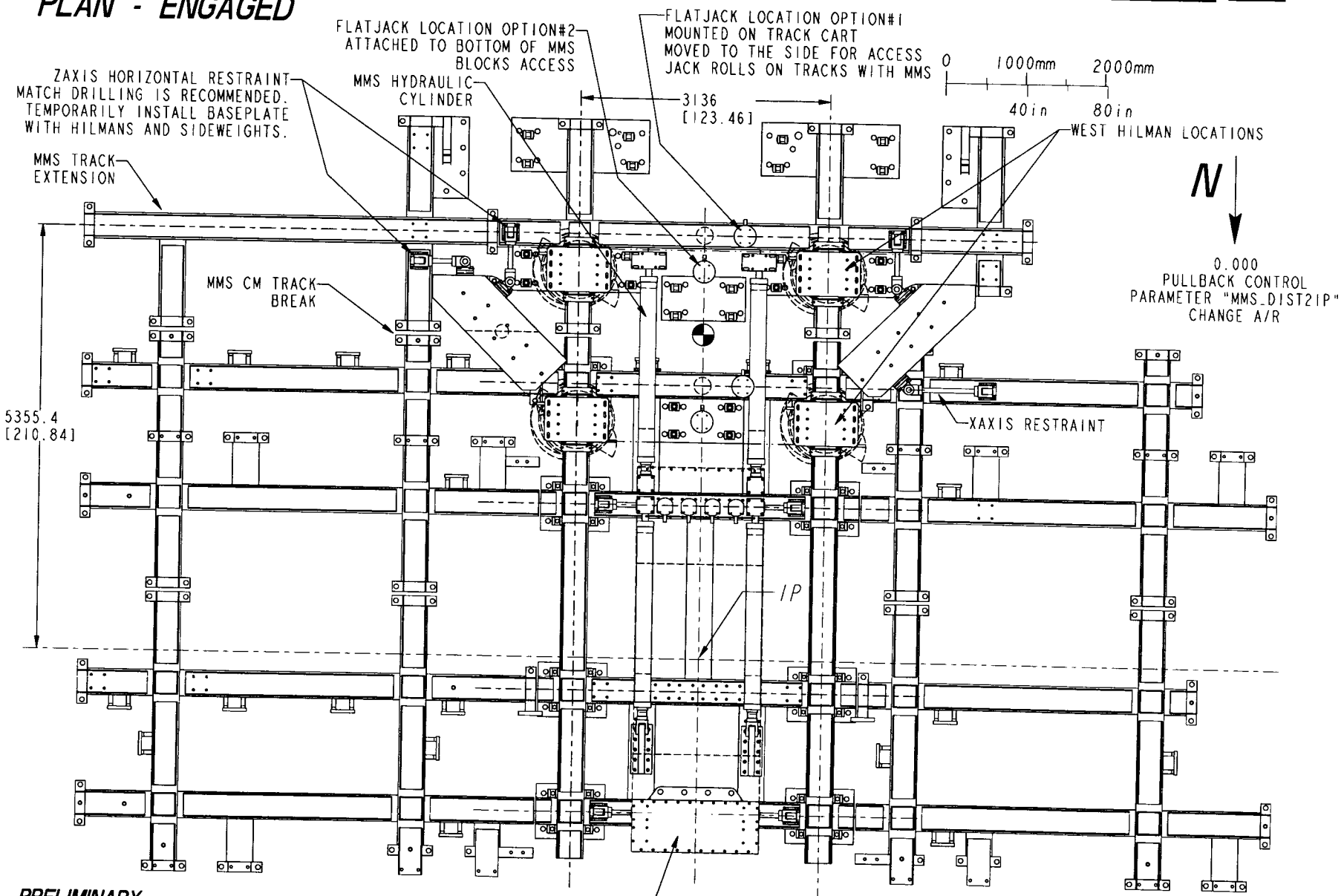

PRELIMINARY

NOT FOR CONSTRUCTION

SCALE 0.0625

UNLESS NOTED ALL DIMENSIONS
ARE IN MILLIMETERS / INCH

CLASSIFICATION
UNCLASSIFIED

DRAWING NO
AAA95-104778-0D

SCALE 612.0 SHEET 2 OF 7

PHENIX - SOUTH MUON MAGNET

17-Jul-96

MMS ENGAGED TRACK LOCATION

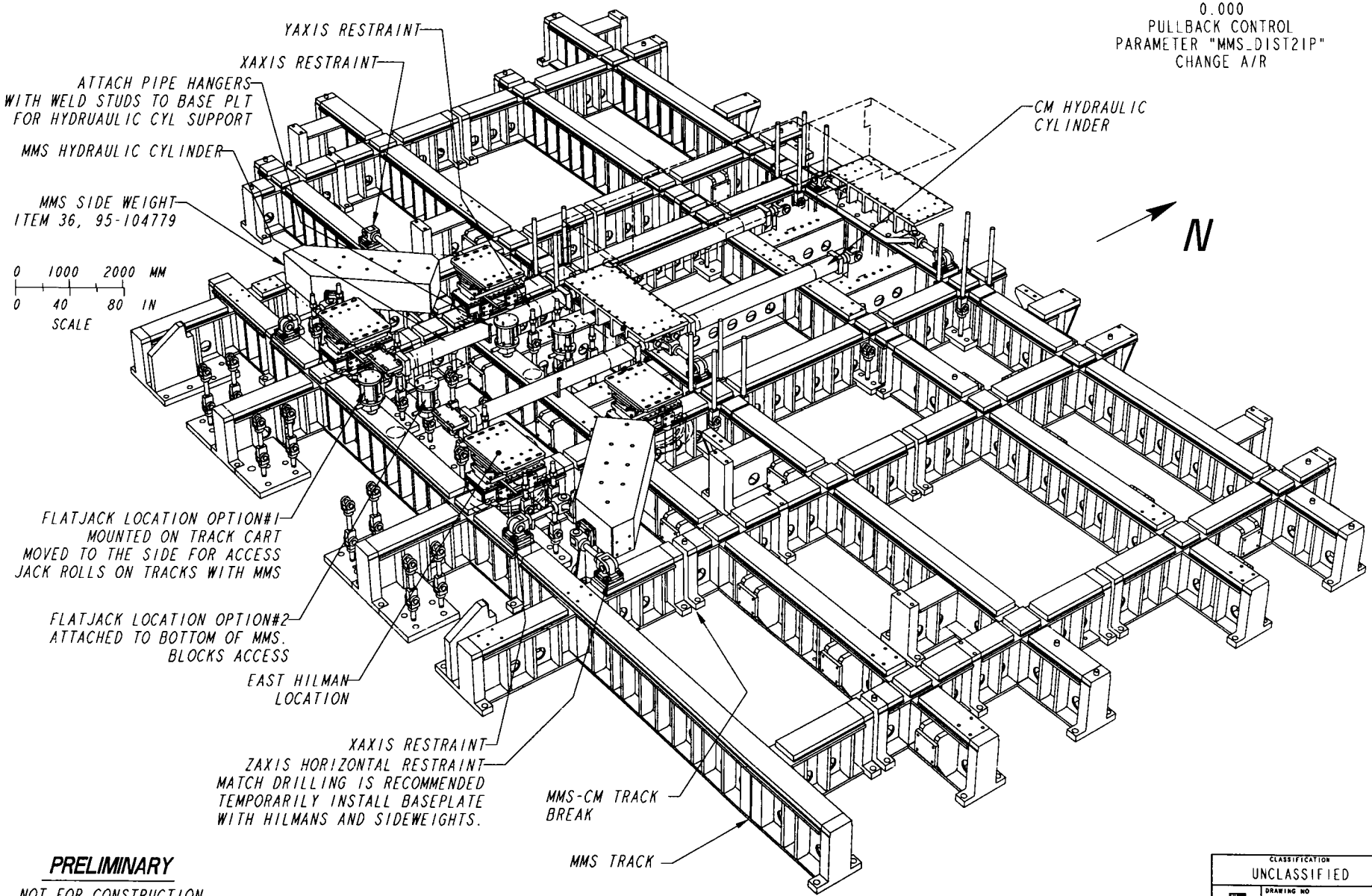

PRELIMINARY

NOT FOR CONSTRUCTION

CLASSIFICATION
UNCLASSIFIED

DRAWING NO
AAA95-104778-0D

SCALE N/A SHEET 4 OF 7

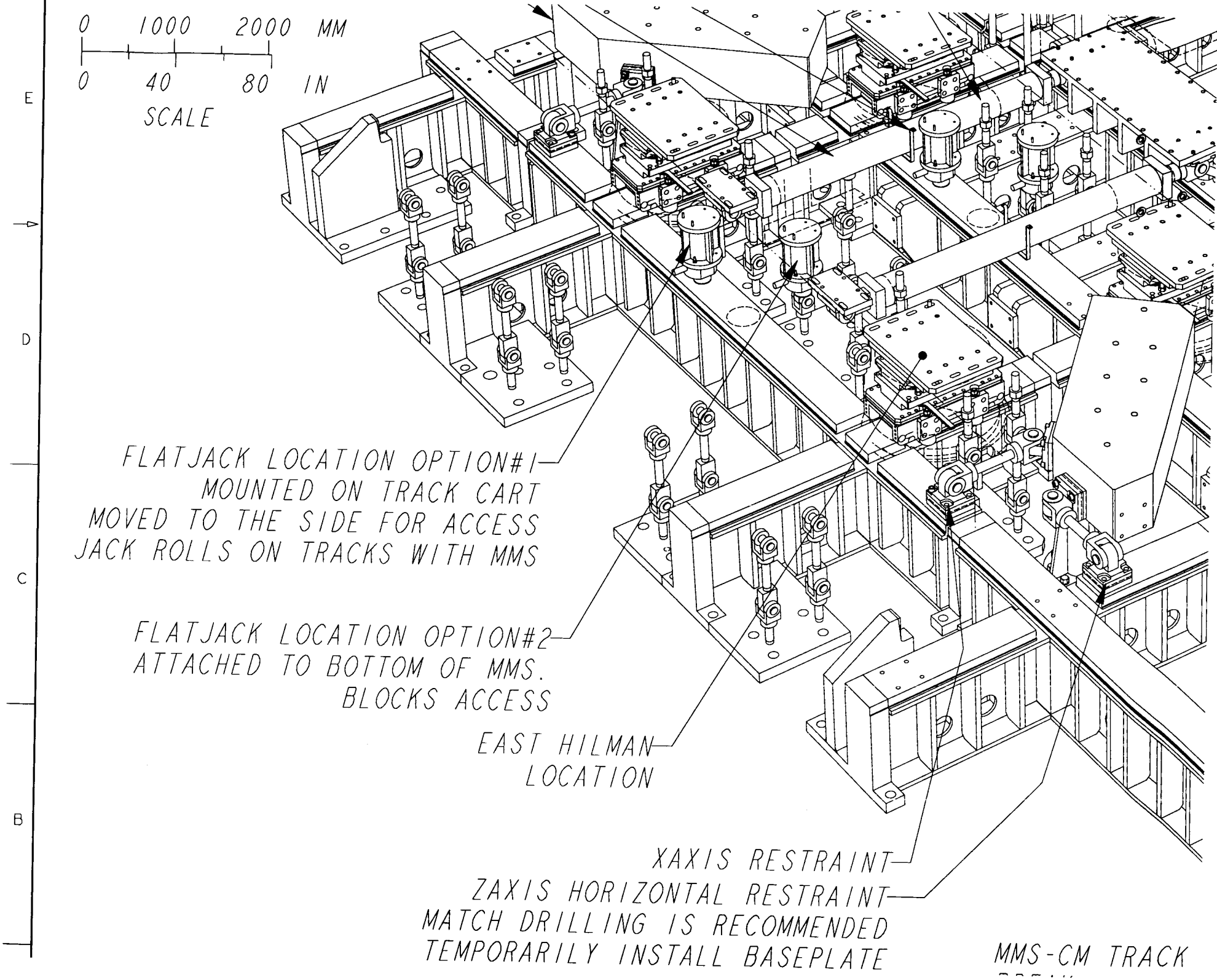
0 1000 2000 MM
0 40 80 IN
SCALE
E
D
C
B
FLATJACK LOCATION OPTION#1
MOUNTED ON TRACK CART
MOVED TO THE SIDE FOR ACCESS
JACK ROLLS ON TRACKS WITH MMS
FLATJACK LOCATION OPTION#2
ATTACHED TO BOTTOM OF MMS.
BLOCKS ACCESS
EAST HILMAN
LOCATION
XAXIS RESTRAINT
ZAXIS HORIZONTAL RESTRAINT
MATCH DRILLING IS RECOMMENDED
TEMPORARILY INSTALL BASEPLATE
MMS-CM TRACK

19-Jul-96

ELEV. LOOKING WEST MMS POSITIONED FOR HILMAN ROTATION

456.692
PULLBACK CONTROL
PARAMETER "MMS_DIST21P"
CHANGE A/R

SI METRIC

THIRD ANGLE PROJECTION

NOTES
UNLESS OTHERWISE SPECIFIED:

1. ALL DIMENSIONS ARE IN MILLIMETERS.
2. DIMENSIONING AND TOLERANCING PER ANSI Y14.5M-1982.
3. SURFACE TEXTURE PER ANSI B46.1-1985. SURFACE TEXTURE SYMBOLS PER ANSI Y14.36-1978.

N

SECTION N-N
SCALE 0.055
ADJUST VIEW SCALE
FROM SHEET 3

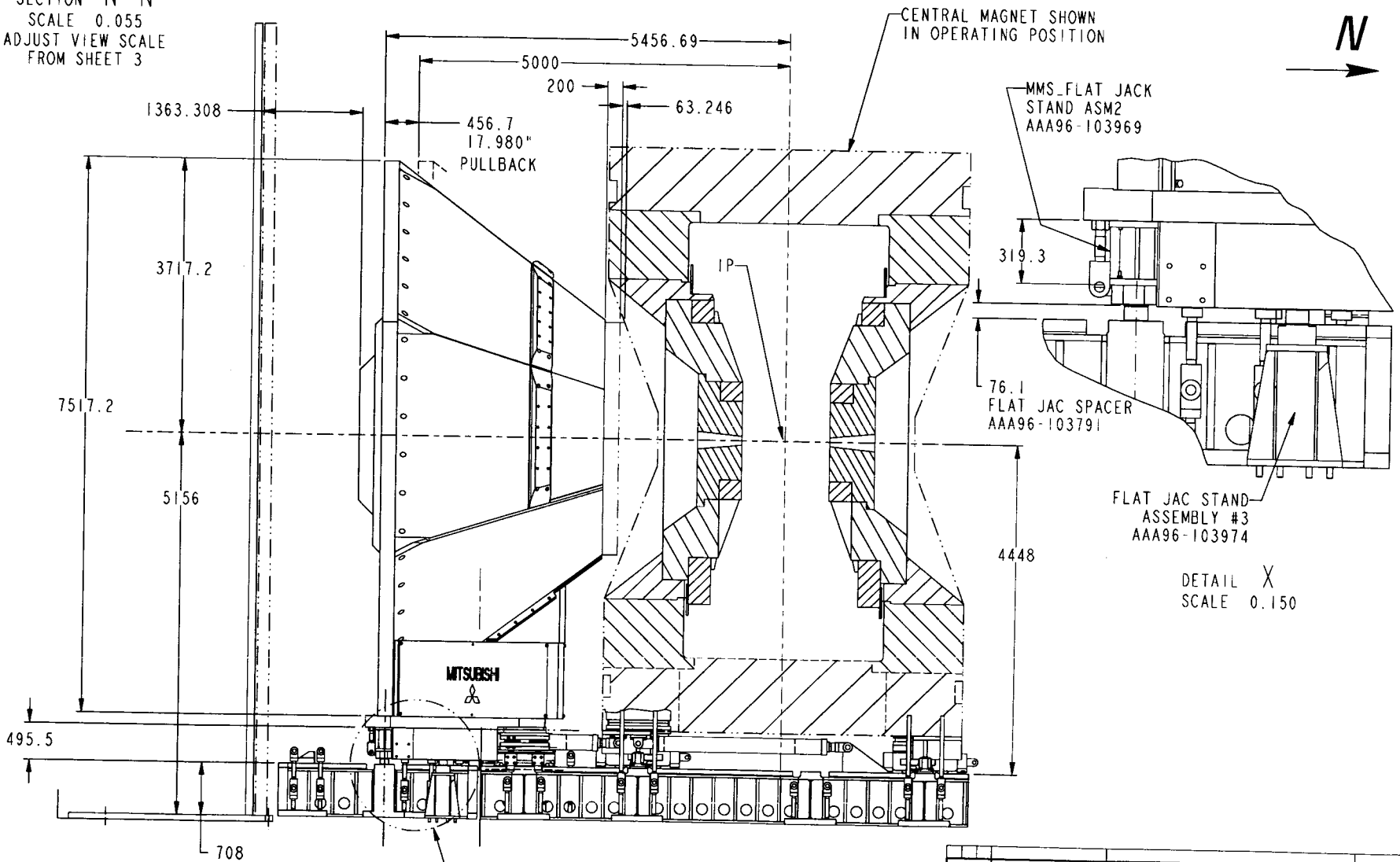

DETAIL X
SCALE 0.150

PRELIMINARY
NOT FOR CONSTRUCTION

NO REQD	PART / LLNL STK NO	DESCRIPTION / MATERIAL	SPEC NO	ITEM
	DWN POSEY 6/96	CLASSIFICATION		
	CHK LIBERIO 6/96			
	APVD VERCELLI 6/96			
	CLASSIFIED BY:			
	TITLE DATE			

LAWRENCE LIVERMORE NATIONAL LABORATORY
MECHANICAL ENGINEERING DEPT
UNIVERSITY OF CALIFORNIA

MAJOR UNIT: RELATIVISTIC HEAVY ION COLLIDER
SUBASSY: PHENIX MUON MAGNET SOUTH
DETAIL: MMS ROLLER ROTATION POSITION
DRAWING NO: AAA96-103947-00
SCALE: SHEET 1 OF 3

LTR DWN CHK APVD DATE DESC CHANGE

(home/arndsgi/lir/phenix-assy/mms/mms.dwg/MMS_OPTIROTATE

PHENIX - SOUTH MUON MAGNET

ROLLER ROTATION POSITION

16-Jul-96

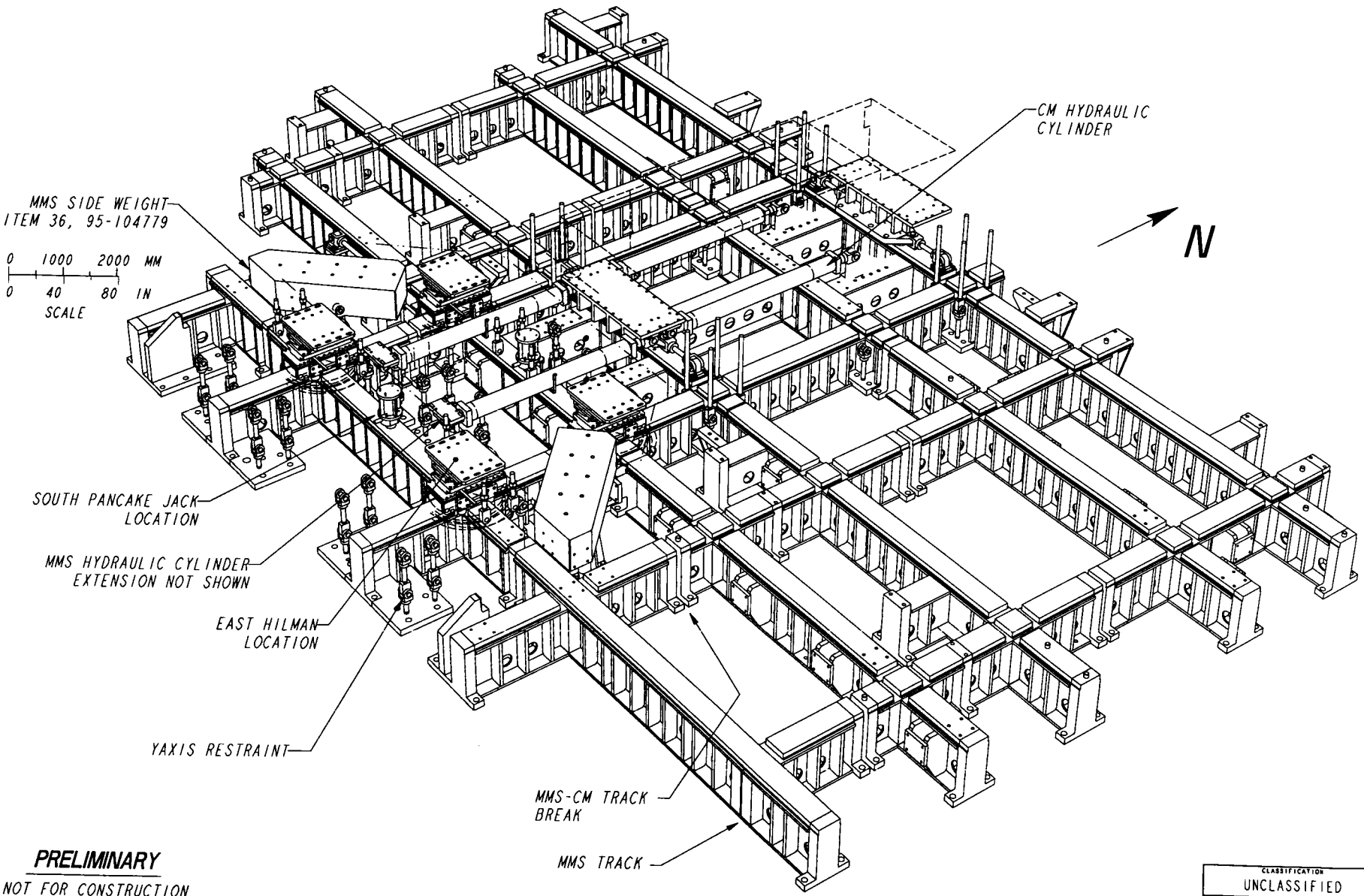

PRELIMINARY

NOT FOR CONSTRUCTION

CLASSIFICATION	
UNCLASSIFIED	
DRAWING NO	AAA96-103947-00
SCALE N/A	SHEET 4 OF 7

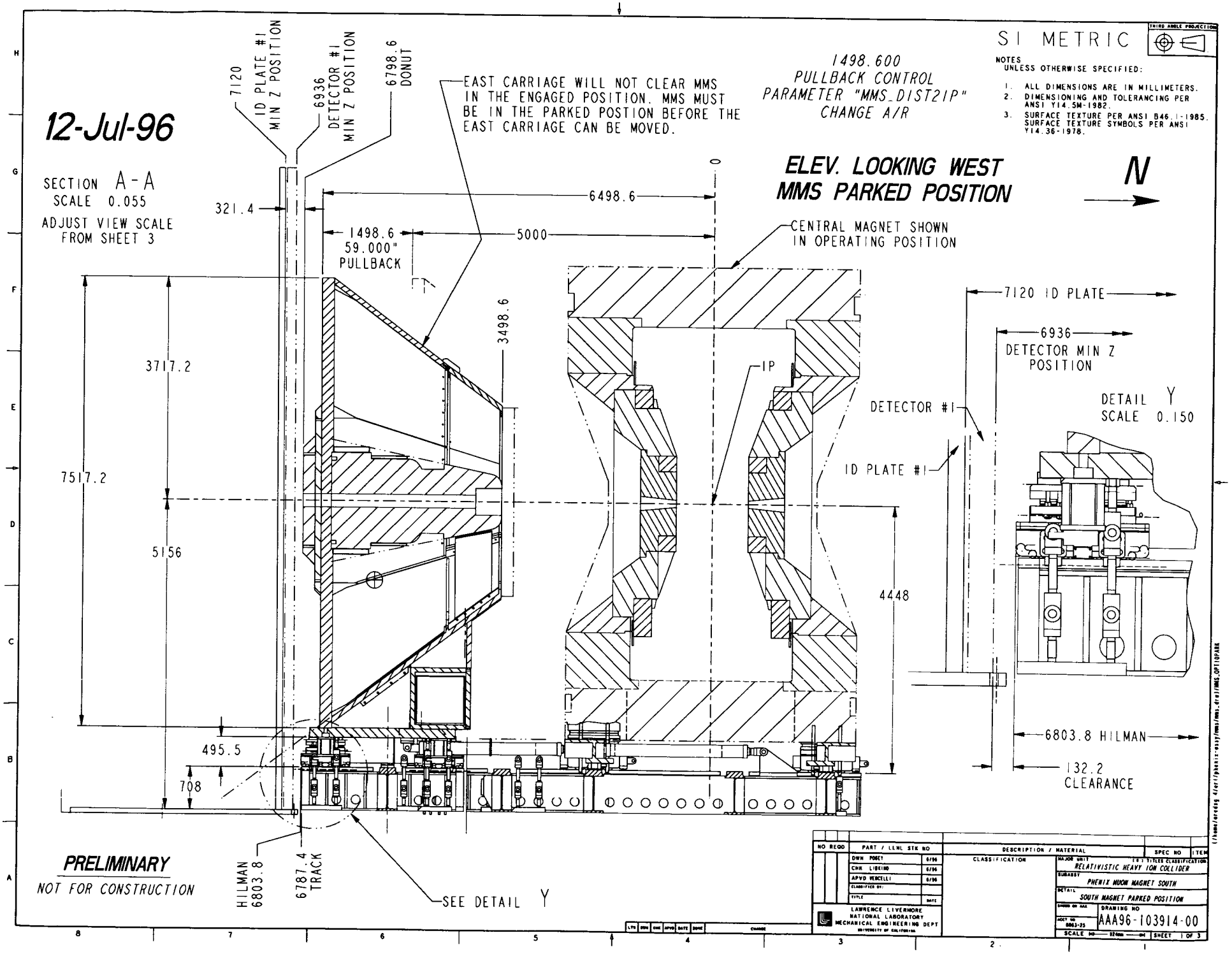
12-Jul-96
SECTION A-A
SCALE 0.055
ADJUST VIEW SCALE FROM SHEET 3
7120 ID PLATE #1 MIN Z POSITION
6936 DETECTOR #1 MIN Z POSITION
6798.6 DONUT
EAST CARRIAGE WILL NOT CLEAR MMS IN THE ENGAGED POSITION. MMS MUST BE IN THE PARKED POSTION BEFORE THE EAST CARRIAGE CAN BE MOVED.
1498.600
PULLBACK CONTROL
PARAMETER "MMS_DIST2IP"
CHANGE A/R
ELEV. LOOKING WEST
MMS PARKED POSITION
N
SI METRIC
THIRD ANGLE PROJECTION
NOTES
UNLESS OTHERWISE SPECIFIED:
1. ALL DIMENSIONS ARE IN MILLIMETERS.
2. DIMENSIONING AND TOLERANCING PER ANSI Y14.5M-1982.
3. SURFACE TEXTURE PER ANSI B46.1-1985. SURFACE TEXTURE SYMBOLS PER ANSI Y14.36-1978.
321.4
6498.6
1498.6
59.000" PULLBACK
5000
CENTRAL MAGNET SHOWN IN OPERATING POSITION
3498.6
3717.2
7517.2
5156
IP
4448
495.5
708
HILMAN 6803.8
6787.4 TRACK
SEE DETAIL Y
7120 ID PLATE
6936
DETECTOR MIN Z POSITION
DETECTOR #1
ID PLATE #1
DETAIL Y
SCALE 0.150
6803.8 HILMAN
132.2 CLEARANCE
PRELIMINARY
NOT FOR CONSTRUCTION
NO REQD
PART / LLNL STK NO
DESCRIPTION / MATERIAL
SPEC NO
ITEM
DWN POGET 6/96
CHK LIBERIO 6/96
APVD MERCILLI 6/96
CLASSIFICATION
LAWRENCE LIVERMORE NATIONAL LABORATORY
MECHANICAL ENGINEERING DEPT
UNIVERSITY OF CALIFORNIA
MAJOR UNIT
RELATIVISTIC HEAVY ION COLLIDER
SUBASSY
PHENIX MUON MAGNET SOUTH
DETAIL
SOUTH MAGNET PARKED POSITION
DRAWING NO
AAA96-103914-00
SCALE
SHEET 1 OF 3

PHENIX SOUTH MUON MAGNET PARKED

PLAN VIEW DISENGAGED

17-Jul-96

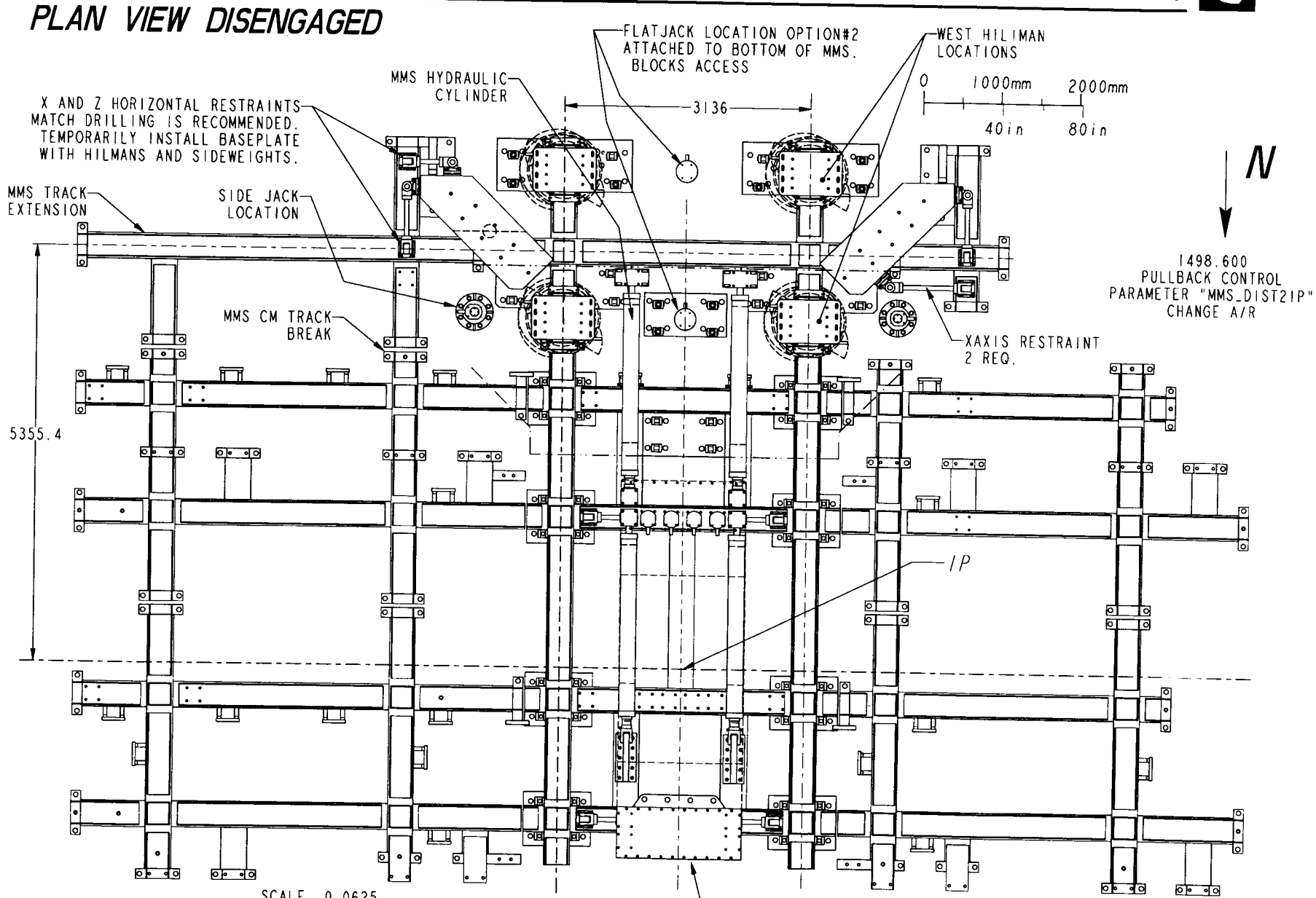

UNLESS NOTED ALL DIMENSIONS
ARE IN MILLIMETERS / INCH

PRELIMINARY

NOT FOR CONSTRUCTION

CLASSIFICATION
UNCLASSIFIED

DRAWING NO
AAA96-103914-00

SCALE 1:12.8 SHEET 2 OF 7

PHENIX - SOUTH MUON MAGNET PARKED

17-Jul-96

DISENGAGED TRACK LOCATION

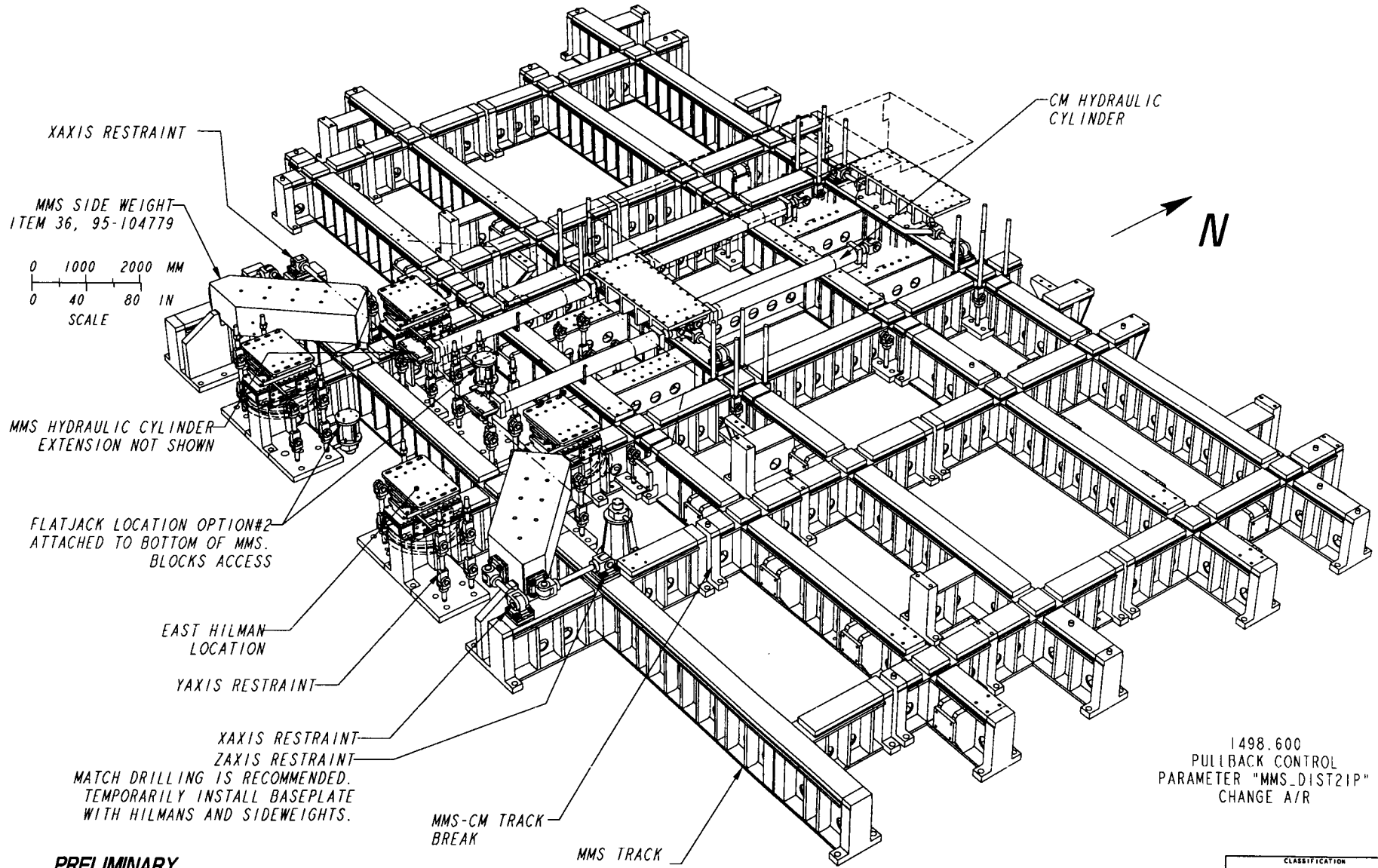

1498.600
PULLBACK CONTROL
PARAMETER "MMS_DIST2IP"
CHANGE A/R

PRELIMINARY

NOT FOR CONSTRUCTION

CLASSIFICATION
UNCLASSIFIED

DRAWING NO
AAA96-103914-00

SCALE N/A SHEET 4 OF 7

PHENIX - SOUTH MUON MAGNET

STATION2 DETECTOR PANEL LOCATION

4-Jun-96

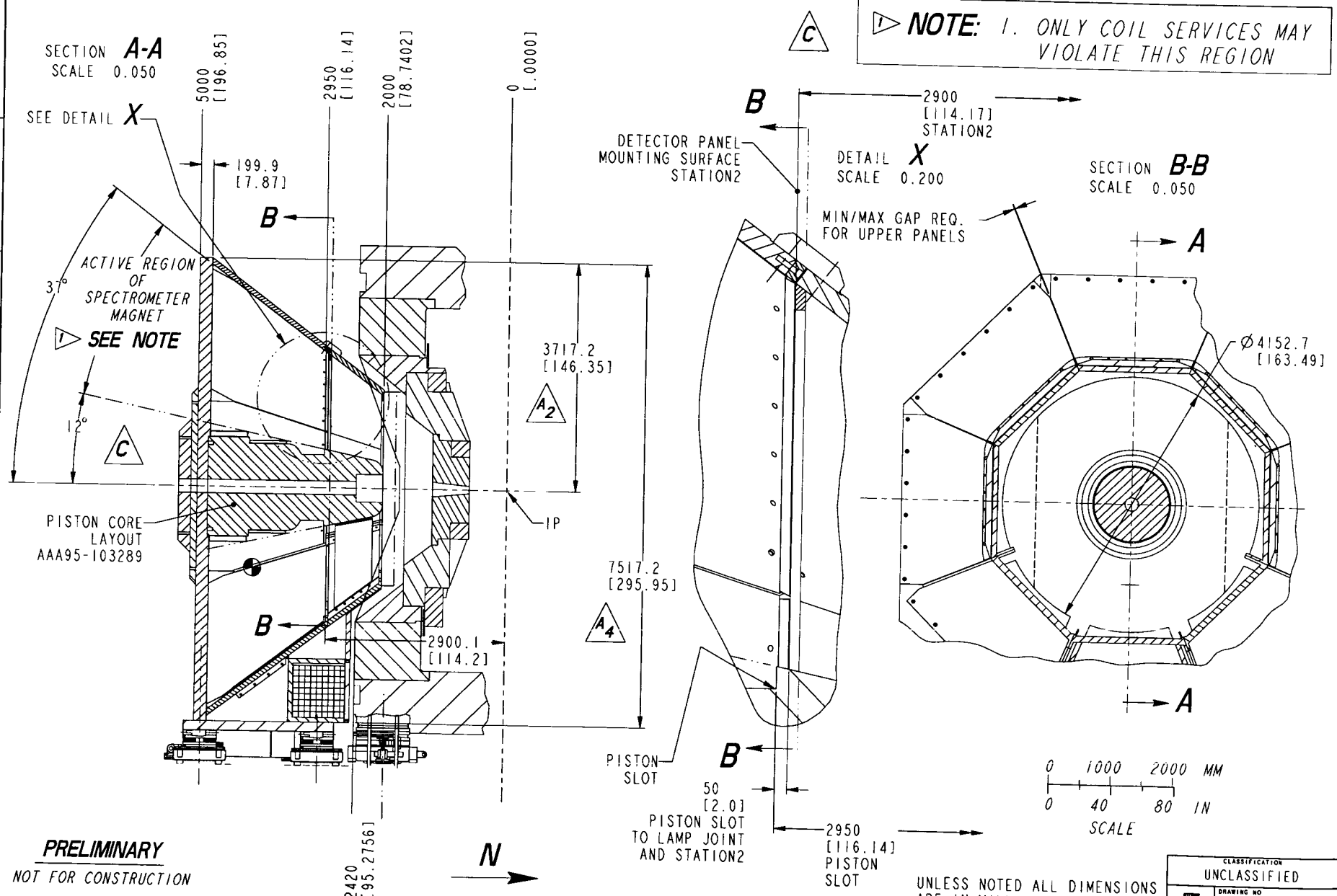

PRELIMINARY

NOT FOR CONSTRUCTION

UNLESS NOTED ALL DIMENSIONS ARE IN MILLIMETERS / INCHES

CLASSIFICATION: UNCLASSIFIED

DRAWING NO: AAA95-104778-0C

SCALE N/A — SHEET 6 OF 7

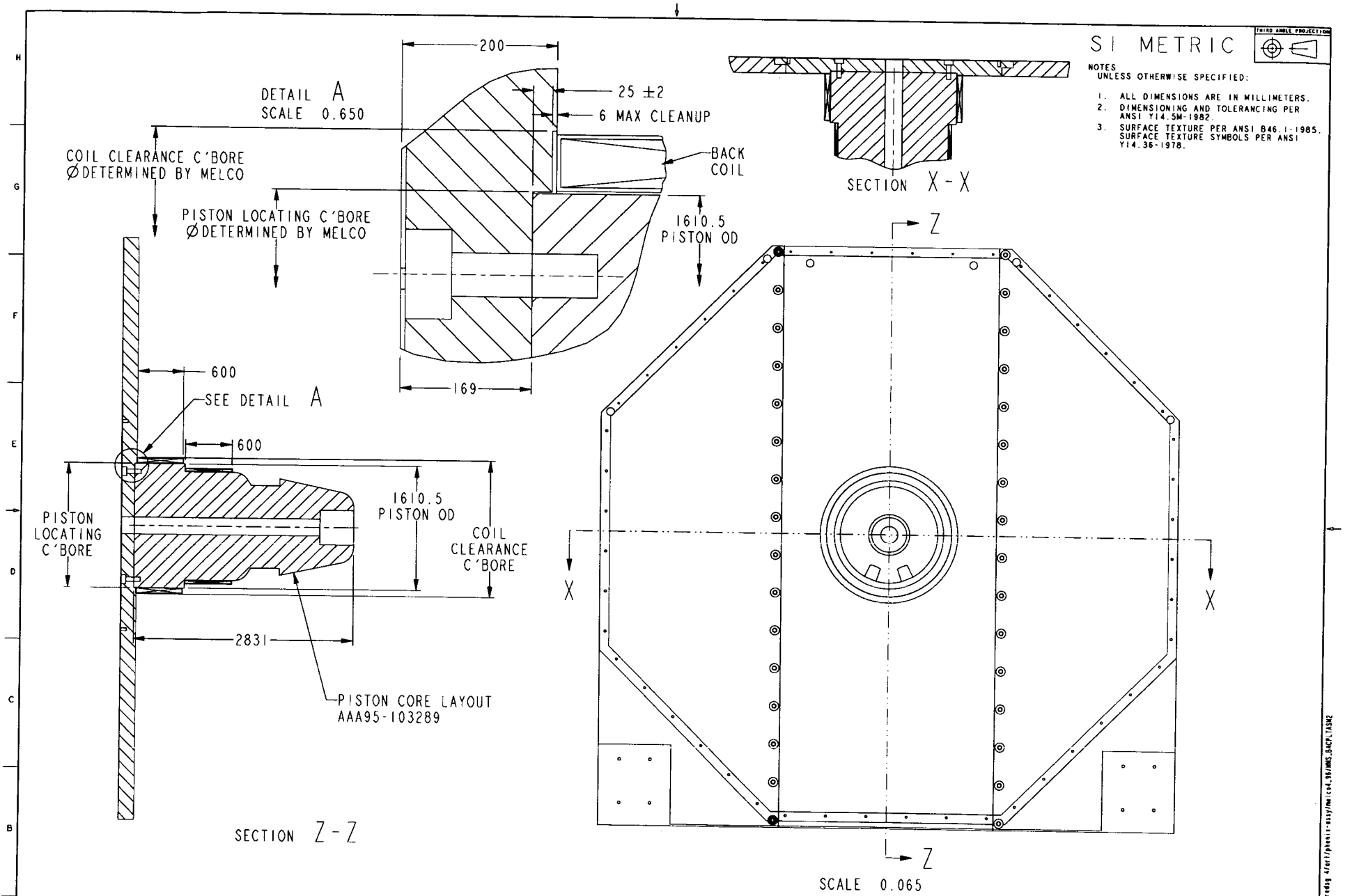
SI METRIC
THIRD ANGLE PROJECTION
NOTES
UNLESS OTHERWISE SPECIFIED:
1. ALL DIMENSIONS ARE IN MILLIMETERS.
2. DIMENSIONING AND TOLERANCING PER ANSI Y14.5M-1982.
3. SURFACE TEXTURE PER ANSI B46.1-1985. SURFACE TEXTURE SYMBOLS PER ANSI Y14.36-1978.
DETAIL A
SCALE 0.650
200
25 ±2
6 MAX CLEANUP
BACK COIL
COIL CLEARANCE C'BORE
ØDETERMINED BY MELCO
PISTON LOCATING C'BORE
ØDETERMINED BY MELCO
1610.5
PISTON OD
169
SECTION X-X
Z
X
X
Z
SCALE 0.065
600
SEE DETAIL A
600
1610.5
PISTON OD
PISTON
LOCATING
C'BORE
COIL
CLEARANCE
C'BORE
2831
PISTON CORE LAYOUT
AAA95-103289
SECTION Z-Z
PRELIMINARY
NOT FOR CONSTRUCTION
24-May-96
NO REQD
PART / LLNL STK NO
DESCRIPTION / MATERIAL
SPEC NO
ITEM
DWN POSEY 5/96
CHK POSEY 5/96
APVD VERCELLI 5/96
CLASSIFICATION
MAJOR UNIT
RELATIVISTIC HEAVY ION COLLIDER
SUBASSY
PHENIX MUON MAGNET SOUTH
DETAIL
BACK PLATE MODIFICATION
DRAWING NO
AAA96-103565-00
LAWRENCE LIVERMORE NATIONAL LABORATORY
MECHANICAL ENGINEERING DEPT
UNIVERSITY OF CALIFORNIA
SCALE
SHEET
OF

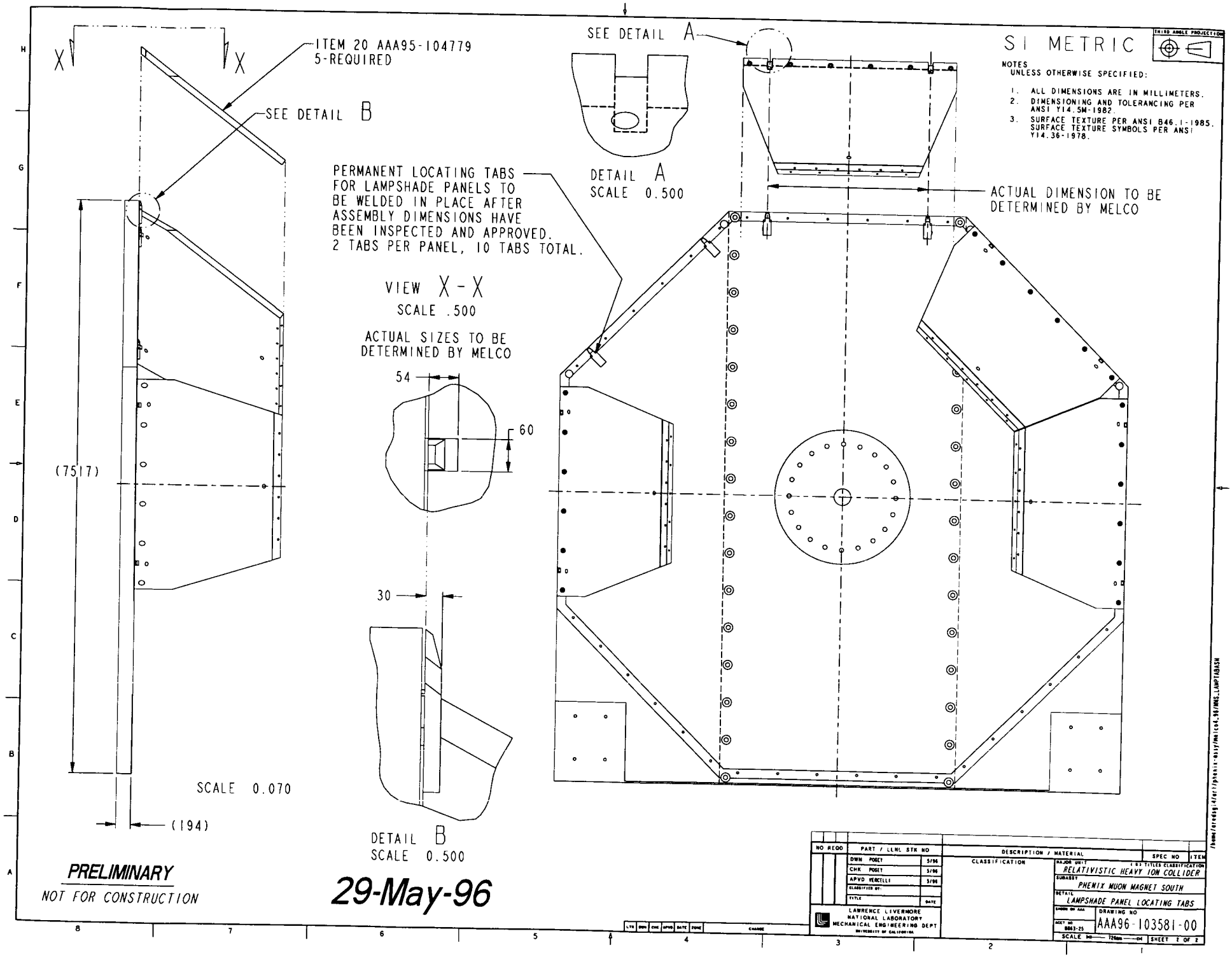
ITEM 20 AAA95-104779
5-REQUIRED
SEE DETAIL B
X
X
(7517)
(194)
SCALE 0.070
VIEW X-X
SCALE .500
PERMANENT LOCATING TABS FOR LAMPSHADE PANELS TO BE WELDED IN PLACE AFTER ASSEMBLY DIMENSIONS HAVE BEEN INSPECTED AND APPROVED. 2 TABS PER PANEL, 10 TABS TOTAL.
ACTUAL SIZES TO BE DETERMINED BY MELCO
54
60
30
DETAIL B
SCALE 0.500
SEE DETAIL A
DETAIL A
SCALE 0.500
ACTUAL DIMENSION TO BE DETERMINED BY MELCO
SI METRIC
THIRD ANGLE PROJECTION
NOTES
UNLESS OTHERWISE SPECIFIED:
1. ALL DIMENSIONS ARE IN MILLIMETERS.
2. DIMENSIONING AND TOLERANCING PER ANSI Y14.5M-1982.
3. SURFACE TEXTURE PER ANSI B46.1-1985. SURFACE TEXTURE SYMBOLS PER ANSI Y14.36-1978.
PRELIMINARY
NOT FOR CONSTRUCTION
29-May-96
NO REQD
PART / LLNL STK NO
DESCRIPTION / MATERIAL
SPEC NO
ITEM
DWN POSET 5/96
CHK POSET 5/96
APVD VERCELLI 5/96
CLASSIFICATION
LAWRENCE LIVERMORE NATIONAL LABORATORY
MECHANICAL ENGINEERING DEPT
UNIVERSITY OF CALIFORNIA
MAJOR UNIT
RELATIVISTIC HEAVY ION COLLIDER
SUBASSY
PHENIX MUON MAGNET SOUTH
DETAIL
LAMPSHADE PANEL LOCATING TABS
DRAWING NO
AAA96-103581-00
SCALE
SHEET 2 OF 2

29-May-96

SI METRIC

THIRD ANGLE PROJECTION

NOTES
UNLESS OTHERWISE SPECIFIED:

1. ALL DIMENSIONS ARE IN MILLIMETERS.
2. DIMENSIONING AND TOLERANCING PER ANSI Y14.5M-1982.
3. SURFACE TEXTURE PER ANSI B46.1-1985. SURFACE TEXTURE SYMBOLS PER ANSI Y14.36-1978.

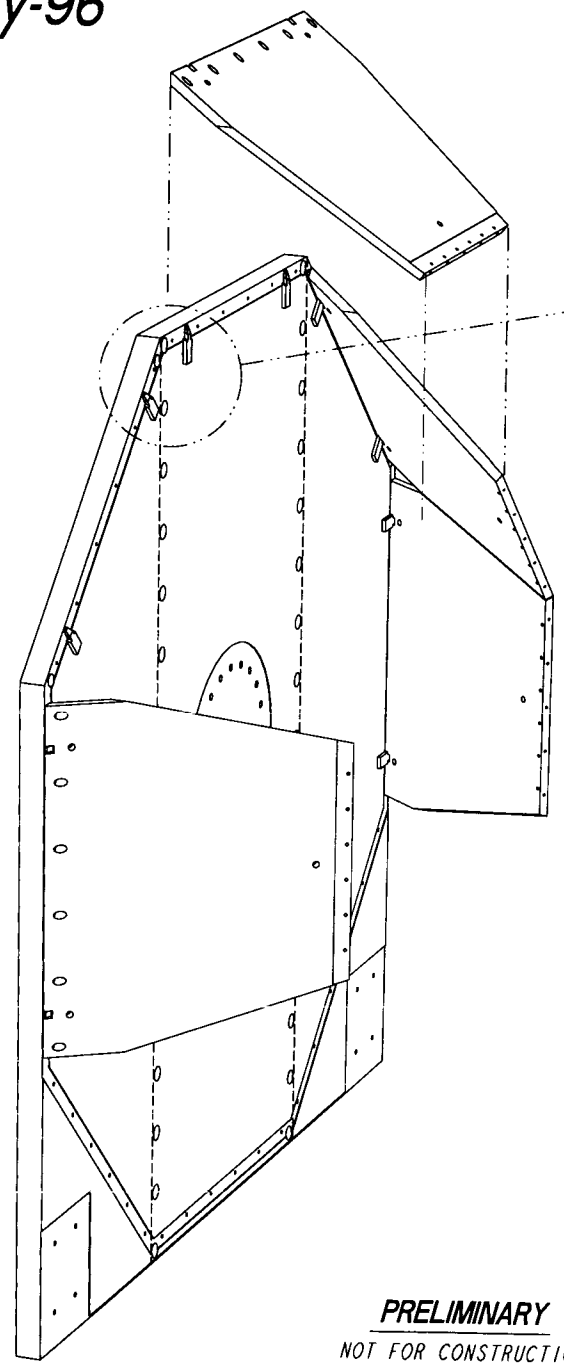

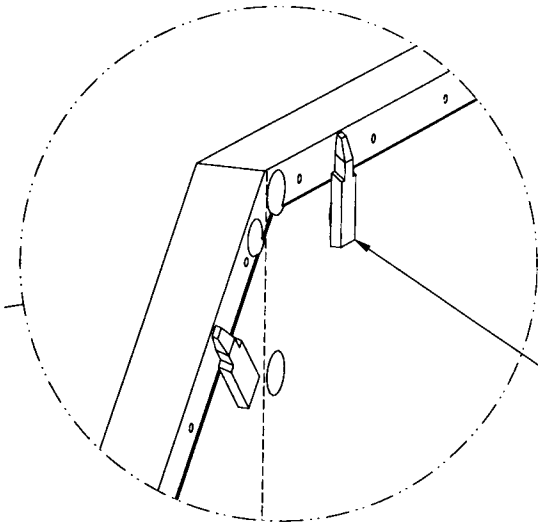

LAMPSHADE LOCATING TAB
ACTUAL DESIGN AND LOCATION TO BE DETERMINED BY MELCO

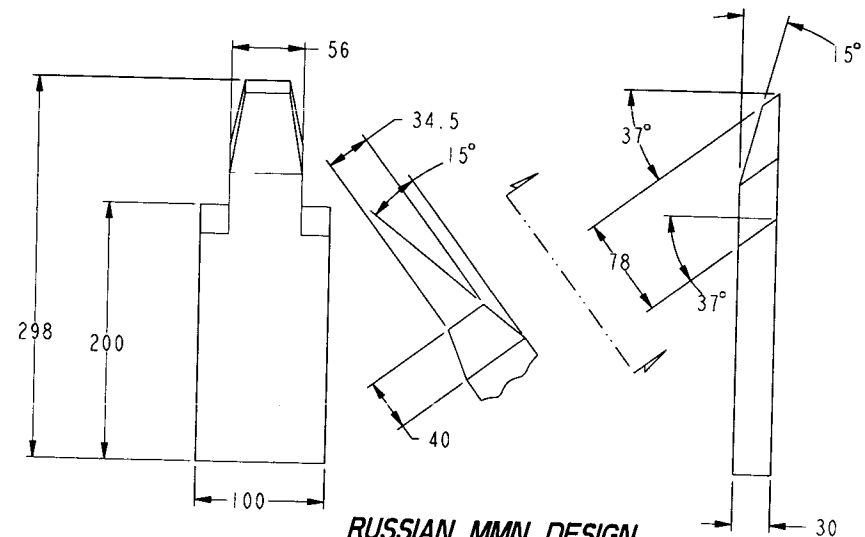

RUSSIAN MMN DESIGN
REFERENCE ONLY

SCALE 0.750

PRELIMINARY
NOT FOR CONSTRUCTION

NO REQD	PART / LLNL STK NO		DESCRIPTION / MATERIAL	SPEC NO	ITEM
	DWN POSEY	5/96	CLASSIFICATION	MAJOR UNIT (N) TITLES CLASSIFICATION: RELATIVISTIC HEAVY ION COLLIDER	
	CHK POSEY	5/96		SUBASSY: PHENIX MUON MAGNET SOUTH	
	APVD VERCELLI	5/96		DETAIL: LAMPSHADE PANEL LOCATING TABS	
	CLASSIFIED BY:			SHOWN ON AAA	DRAWING NO
	TITLE	DATE		ACCT NO 8063-25	AAA96-103581-00
	LAWRENCE LIVERMORE NATIONAL LABORATORY MECHANICAL ENGINEERING DEPT UNIVERSITY OF CALIFORNIA			SCALE 1/8 — 726 —	SHEET 1 OF 2

LTR DWN CHK APVD DATE ZONE CHANGE

/home/aredsgid/orl/phenix-assy/melco4_96/MMS_LAMPTABASN

LOWPLATE CHANGES

NOTES
UNLESS OTHERWISE SPECIFIED:

1. ALL DIMENSIONS ARE IN MILLIMETERS.
2. DIMENSIONING AND TOLERANCING PER ANSI Y14.5M-1982.
3. SURFACE TEXTURE PER ANSI B46.1-1985. SURFACE TEXTURE SYMBOLS PER ANSI Y14.36-1978.

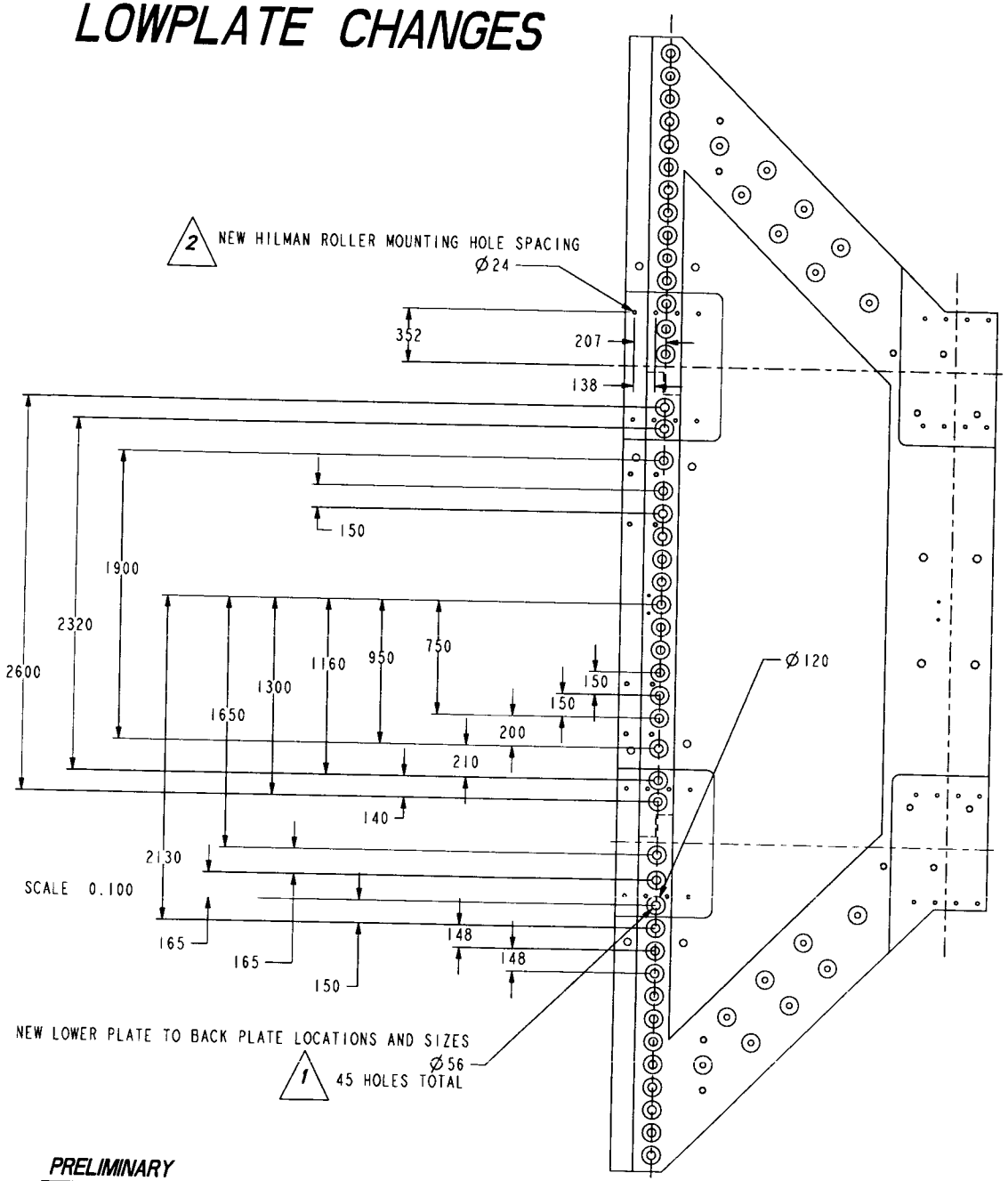

6/10/96
NEW LOWER PLATE TO BACK PLATE LOCATIONS AND SIZES

IN ANTICPATION OF THE FINAL BACKPLATE AND LOWERPLATE DYNAMIC ANALYSIS THE FOLLOWING CHANGES HAVE BEEN MADE:

1.
LOWERPLATE TO BACKPLATE CLEARANCE HOLE DIAMETERS WERE INCREASED TO 56mm FOR A M48 SCREW. ADDTIONAL HOLES WERE ALSO ADDED. HOLE SPACING WAS ALSO CHANGED AS SHOWN.

THIS WAS DONE TO PREVENT HILMAN ROLLER MOUNTING SURFACE INTERFERENCE WITH BACKPLATE BOLT CBORES. THIS ALSO REDUCES CBORE INTERFERENCE WITH OTHER HARDWARE MOUNTING HOLES.

THIS SCREW SPACING ALLOWS FOR EVEN LARGER SCREWS IF ANALYSIS REQUIRES THEM AT THE LAST MINUTE. SOME CBORES WOULD NEED TO BE ELIMINATED AND SOME HOLES WOULD STILL HAVE TO USE M48 SCREWS.

THE BACK PLATES MUST BE CHANGED TO MATCH THE NEW SPACING AND ANY NEW HOLES WHICH HAVE BEEN ADDED.

2.
HILMAN MOUNTING HOLES WERE SPREAD FURTHER APART TO PREVENT INTERFERENCE WITH BACKPLATE/LOWPLATE CBORES. CBORE AND THREAD DEPTHS WERE MODIFIED ON HILMAN MOUNTING SURFACES.

MELCO MAY CHANGE DEPTH AS NEEDED TO PREVENT BOLT HEAD INTERFERENCE AND TO CREATE CORRECT THREAD ENGAGMENT.

IF MELCO HAS SOLVED THESE PROBLEMS PRIOR TO RECIEVING THIS INFORMATION. THEN THEIR SOLUTIONS SHOULD TAKE PRECEDENCE. LLNL NEEDS TO VERIFY THIS INFORMATION SOON SO DETAILING OF HILMAN ROLLER HARDWARE CAN BE COMPLETED.

10-Jun-96

PRELIMINARY
NOT FOR CONSTRUCTION

NO REQD	PART / LLNL STK NO	DESCRIPTION / MATERIAL	SPEC NO	ITEM
	DWN POSEY 6/96	CLASSIFICATION		
	CHK POSEY 6/96			
	APVD VERCELLI 6/96			
	CLASSIFIED BY:			
	TITLE DATE			

LAWRENCE LIVERMORE NATIONAL LABORATORY
MECHANICAL ENGINEERING DEPT
UNIVERSITY OF CALIFORNIA

MAJOR UNIT: RELATIVISTIC HEAVY ION COLLIDER
SUBASSY: PHENIX MUON MAGNET SOUTH
DETAIL: BACKPLATE/LOWPLATE HILMAN LAYOUT
DRAWING NO: AAA96-103920-00
SCALE: NO — N/A — SHEET 1 OF 2

/home/ereddy/dfer/phenix/assy/mms/mms.drw/MMS_LOWPLATES_696

10-Jun-96

LOWPLATE CHANGES

NOTES
UNLESS OTHERWISE SPECIFIED:

1. ALL DIMENSIONS ARE IN MILLIMETERS.
2. DIMENSIONING AND TOLERANCING PER ANSI Y14.5M-1982.
3. SURFACE TEXTURE PER ANSI B46.1-1985. SURFACE TEXTURE SYMBOLS PER ANSI Y14.36-1978.

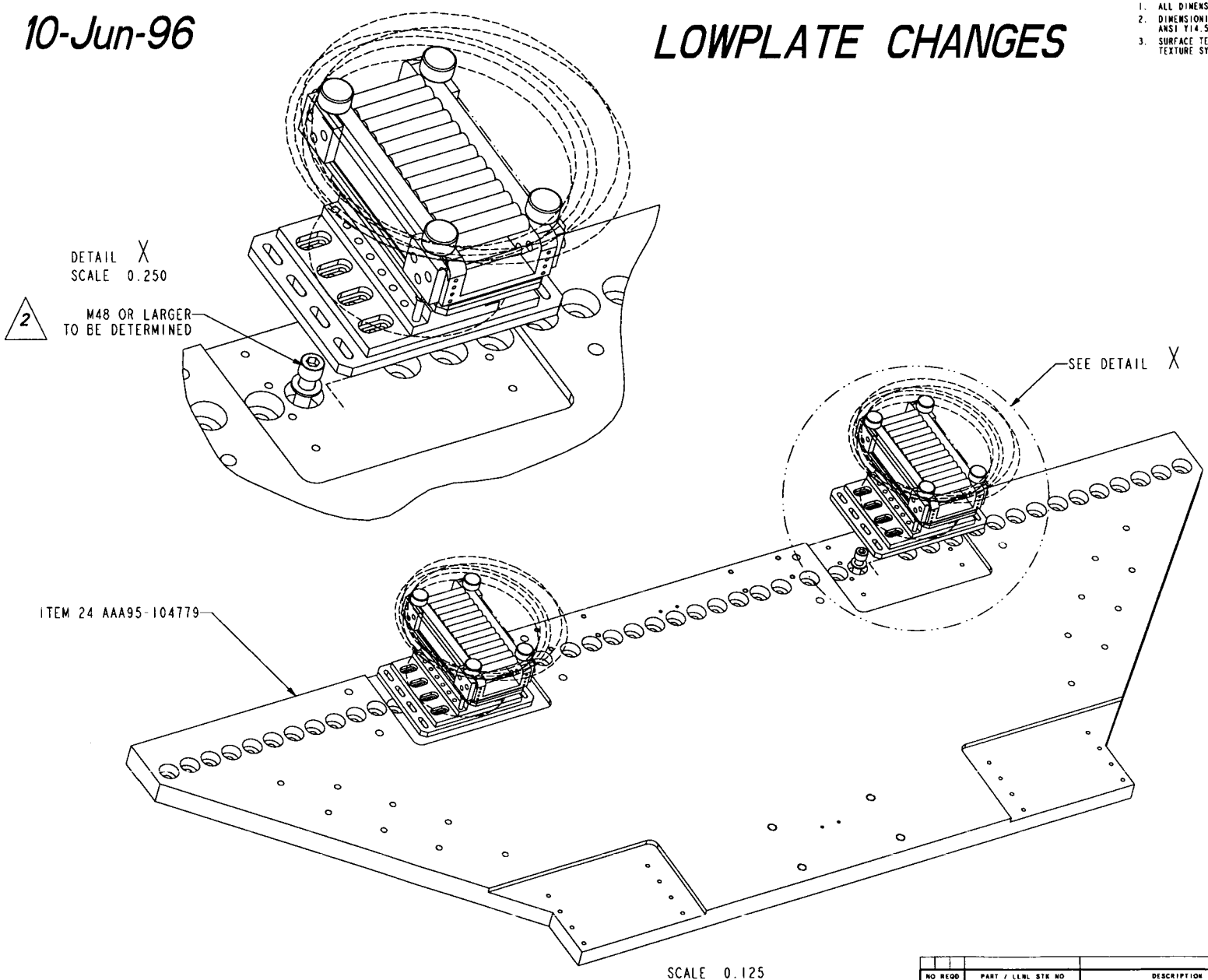

PRELIMINARY
NOT FOR CONSTRUCTION

NO REQD	PART / LLNL STK NO		DESCRIPTION / MATERIAL	SPEC NO	ITEM
	DWN POSEY	6/96	CLASSIFICATION	MAJOR UNIT (K) TITLES CLASSIFICATION: RELATIVISTIC HEAVY ION COLLIDER	
	CHK POSEY	6/96		SUBASSY: PHENIX MUON MAGNET SOUTH	
	APVD VERCELLI	6/96		DETAIL: BACKPLATE/LOWPLATE HILMAN LAYOUT	
	CLASSIFIED BY:			SHOWN ON AAA	DRAWING NO AAA96-103920-00
	TITLE	DATE		ACCT NO 8003-25	
	LAWRENCE LIVERMORE NATIONAL LABORATORY MECHANICAL ENGINEERING DEPT UNIVERSITY OF CALIFORNIA			SCALE N/A	SHEET 2 OF 2

LTR | DWN | CHK | APVD | DATE | ZONE | CHANGE

/home/aradsgi4/arl/phenix-assy/LLL2japan/lowpl16_96/MNS_LOWPLATE9_696

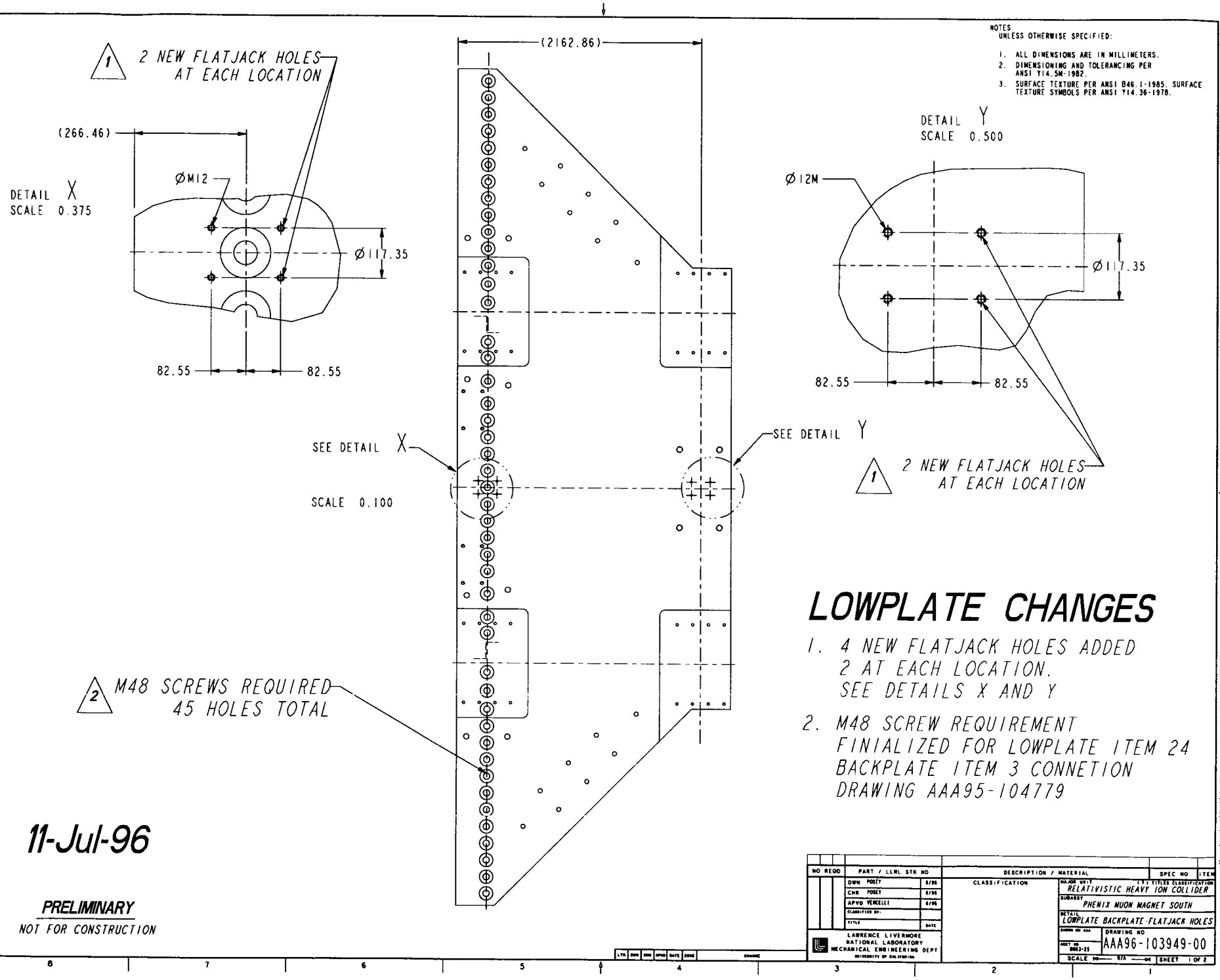

NOTES
UNLESS OTHERWISE SPECIFIED:
1. ALL DIMENSIONS ARE IN MILLIMETERS.
2. DIMENSIONING AND TOLERANCING PER ANSI Y14.5M-1982.
3. SURFACE TEXTURE PER ANSI B46.1-1985. SURFACE TEXTURE SYMBOLS PER ANSI Y14.36-1978.
1 2 NEW FLATJACK HOLES AT EACH LOCATION
(266.46)
ØM12
DETAIL X
SCALE 0.375
Ø117.35
82.55
82.55
(2162.86)
SEE DETAIL X
SCALE 0.100
SEE DETAIL Y
DETAIL Y
SCALE 0.500
Ø12M
Ø117.35
82.55
82.55
1 2 NEW FLATJACK HOLES AT EACH LOCATION
2 M48 SCREWS REQUIRED 45 HOLES TOTAL
LOWPLATE CHANGES
1. 4 NEW FLATJACK HOLES ADDED 2 AT EACH LOCATION. SEE DETAILS X AND Y
2. M48 SCREW REQUIREMENT FINIALIZED FOR LOWPLATE ITEM 24 BACKPLATE ITEM 3 CONNETION DRAWING AAA95-104779
11-Jul-96
PRELIMINARY
NOT FOR CONSTRUCTION
NO REQD
PART / LLNL STK NO
DESCRIPTION / MATERIAL
SPEC NO
ITEM
DWN POSEY 6/96
CHK POSEY 6/96
APVD VERCELLI 6/96
CLASSIFICATION
MAJOR UNIT RELATIVISTIC HEAVY ION COLLIDER
SUBASSY PHENIX MUON MAGNET SOUTH
DETAIL LOWPLATE BACKPLATE-FLATJACK HOLES
DRAWING NO AAA96-103949-00
LAWRENCE LIVERMORE NATIONAL LABORATORY
MECHANICAL ENGINEERING DEPT
UNIVERSITY OF CALIFORNIA
SCALE
SHEET 1 OF 2

11-Jul-96

LOWPLATE CHANGES

NOTES
UNLESS OTHERWISE SPECIFIED:

1. ALL DIMENSIONS ARE IN MILLIMETERS.
2. DIMENSIONING AND TOLERANCING PER ANSI Y14.5M-1982.
3. SURFACE TEXTURE PER ANSI B46.1-1985. SURFACE TEXTURE SYMBOLS PER ANSI Y14.36-1978.

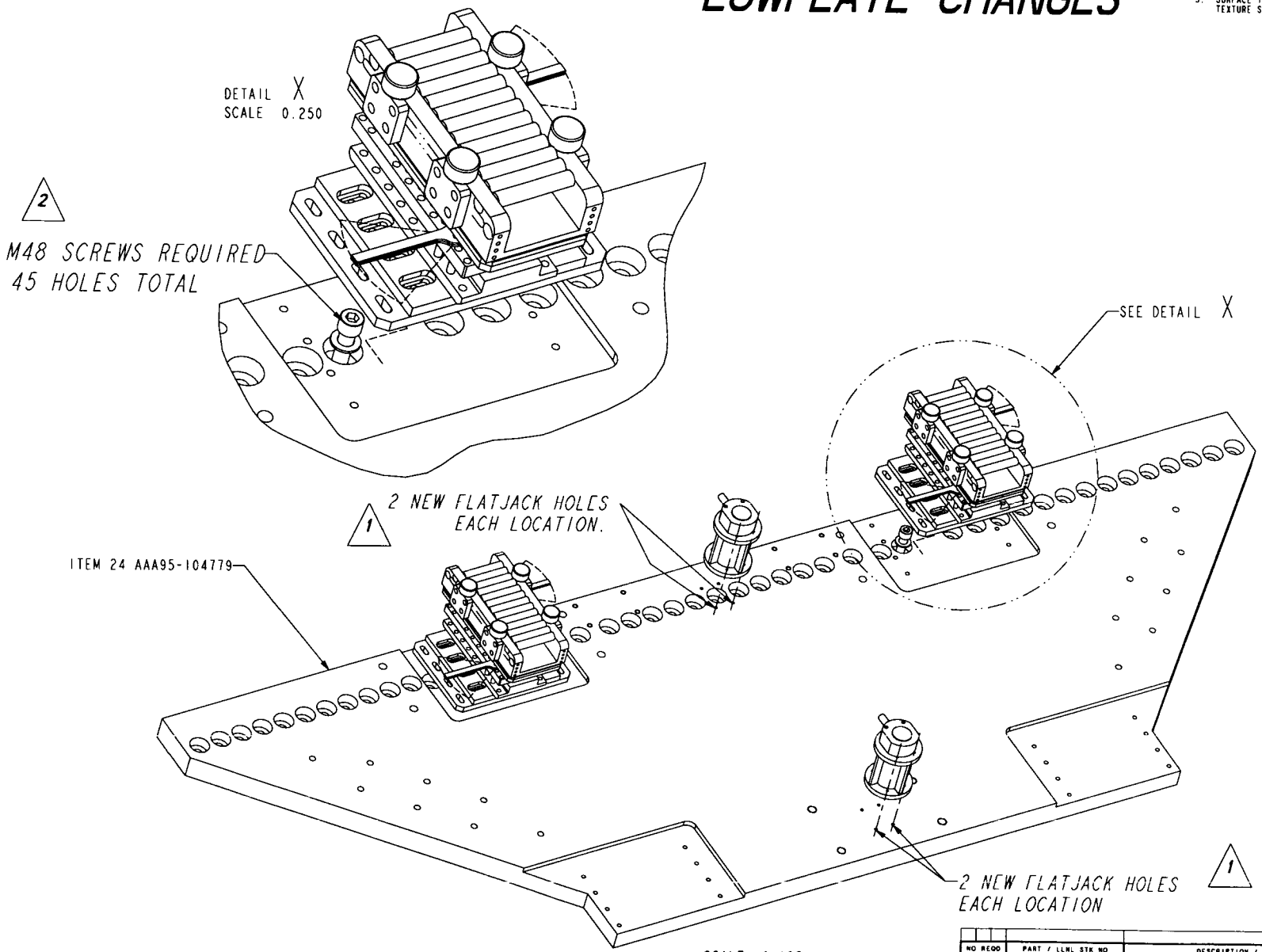

PRELIMINARY
NOT FOR CONSTRUCTION

NO REQD	PART / LLNL STK NO		DESCRIPTION / MATERIAL	SPEC NO	ITEM
	DWN POSEY	6/96	CLASSIFICATION	MAJOR UNIT (W) TITLES CLASSIFICATION: RELATIVISTIC HEAVY ION COLLIDER	
	CHK POSEY	6/96		SUBASSY: PHENIX MUON MAGNET SOUTH	
	APVD VERCELLI	6/96		DETAIL: LOWPLATE BACKPLATE-FLATJACK HOLES	
	CLASSIFIED BY:			SHOWN ON AAA	DRAWING NO
	TITLE	DATE		ACCT NO 6063-25	AAA96-103949-00
	LAWRENCE LIVERMORE NATIONAL LABORATORY MECHANICAL ENGINEERING DEPT UNIVERSITY OF CALIFORNIA			SCALE N/A	SHEET 2 OF 2

sharo/LLL2PPL/95/3-24-95/MMS_LOWPLATE9_796