23.22
1.3
34.5

34.5
11.3
45.8

RHIC/PHENIX DETECTOR SYSTEM

Muon Magnet South

Fabrication Design of MMS

Final Design Review

Shintaro Fukumoto

Mitsubishi Electric Corporation

KOBE WORKS

July 24, 1996

at Santa Fe

Contents of this talk

1. PDR Summary
   - MMS assembly
   - Coil insulation system
   - Steel material
   - Surface preparation
2. Steel design
   - In-house assembly flow
   - Connection details
   - Bolt size selection
   - Statical analysis
3. Coil design
   - Design summary
   - Design changes since PDR
   - Coil parameters
   - Layout (coil & overall)
   - Drawings
4. In-house test and inspection
5. MMS fabrication schedule

MMS assembly

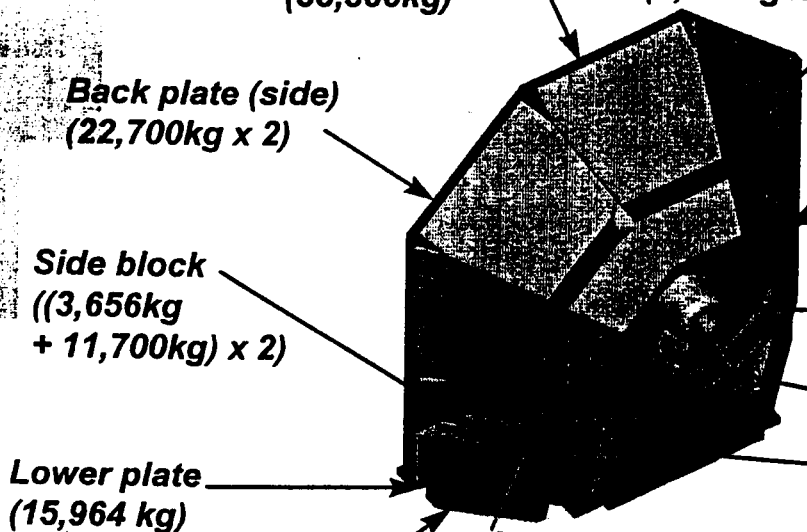

PDR Summary (MMS assembly)

Component weights

Item	Quantity	Unit weight	Total weight
Back-plate(mid)	1	33,300	33,300
Back-plate(side)	2	22,700	45,400
Donut(big)	1	6,238	6,238
Donut(small)	1	4,701	4,701
Lower-plate	1	15,964	15,964
Side block	2	3,656	7,312
Mid block	1	5,500	5,500
Lead	1	44,000	44,000
Piston	1	30,982	30,982
Lampshade panel(top)	5	3,541	17,705
Lampshade panel(bottom)	1	14,835	14,835
Teacup	1	6,091	6,091
Others (side weight and so on)	1	13,764	13,764
Coil(front)	1	554	554
Coil(rear)	1	1,281	1,281
		Total weight:	247,627 kg

CRANE LIMIT?

PDR summary

- **Coil insulation system**
  - Pre-preg method
    - Turn to turn : Nomex(TM) tape + Glass tape
    - Layer to layer : MAT6(TM) sheet
    - Ground : MAT6 (TM) sheet
      (+ NEMA G10 sheet
      +Glass tape (outside surface only))

Insulation system

- **Turn to turn insulation**
  - 1-2/3-lap of NOMEX(TM) tape(0.24mm thick)
  - 1-2/3-lap of glass tape(0.39mm thick)
    - Total thickness of turn to turn insulation is about 1.26mm
- **Layer to layer insulation**
  - 1-t0.5 MAT6 (0.5mm thick)
- **Ground insulation** ((1):detector side, (2):piston side)
  - (1) 2-t0.5 MAT6 (0.5mm thick)
  - 1-t0.5 NEMA G10 (0.5mm thick)
  - 1-1/2-lap of glass tape(0.26mm thick)
  - (2) 3-t0.5 MAT6 (1.0mm thick)

PDR summary

- **Surface preparation**
  - Steel
    - Pending

      (What kind of final coat resin will be used at BNL?)
  - Coil
    - 'Red varnish'

      (for waterproofing and makeup)

Surface preparation (Steel)

- The primer to prepare depends on the resin of final coat.
- What kind of resin will be used at BNL?
  - alkyd, acrylate, epoxy, poly-urethane, and so on?
- Mitsubishi standard rust prevention primer of steel, 'RUSTITE(TM) NC No.90' has the following feature.

  1)Pollution free (Without Cr and Pb, zinc chromate)

  2) Alkyd resin system

  3) Quick-drying

  4) Wide selection of final coats

Spec. of AISI 1006 equiv.

■ Chemical composition (Ladle analysis):

C ≦ 0.08 wt.%

Mn ≦ 0.25~0.40 wt.%

P ≦ 0.04 wt.%

S ≦ 0.05 wt.%

■ Demagnetization rate

$$\Sigma\Delta B = 0.3C + 0.032Si + 0.075Mn + 0.016Cu + 0.033Cr + 0.075Mo + 0.068\,Al + 0.7N \leqq 0.07\ \text{Tesla}$$

Spec. of AISI 1006 equiv.

■ Magnetic properties:

	Magnetizing force Oe	(A/m)	Magnetic induction Tesla
B_1	1	(80)	≧0.15
B_2	2	(160)	≧0.5
B_3	3	(240)	≧0.75
B_5	5	(400)	≧1.1
B_{25}	25	(2000)	≧1.45
B_{125}	125	(10000)	≧1.7
B_{375}	375	(30000)	≧2.0
Coercive force (Bm = 1.5 Tesla) Hc_{15}			≦ 1.375 Oe (110 A/m)

Steel design

- Steel material
- Specification of AISI-1006 equivalent
- In-house assembly flow
- Connection details
- Bolt size selection criteria

MITSUBISHI ELECTRIC CORPORATION

MMS steel material

Item	Material	Process	Size (mm)
Piston core	AISI 1006 equivalent	forged	< ϕ1621
Support fin	JIS SUS310	rolled	< 51
Internal flange of lampshade panel	JIS SUS304L	rolled	< 50
	AISI 1006		

Spec. of AISI 1006 equiv.

- **Comparison with others**
  - Chemical composition
    (Ladle analysis wt. %)
  - Magnetic properties
    (Magnetization force (A/m) vs. Magnetic fl
    density (T))

MITSUBISHI ELECTRIC CORPOR

Grade	C	Si	Mn	P	S	Cu	Ni	Cr	Mo	T.Al	T.N
N-SMIP-1	0.002	0.004	0.06	0.004	0.002	0.01	0.027	0.016	0.001	0.018	0.0040
AISI 1006	0.062	0.031	0.33	0.012	0.006	0.01	0.018	0.024	0.001	0.014	0.0058
JIS S10C	0.12	0.25	0.41	0.006	0.003	0.01	0.021	0.019	0.001	0.022	0.0058

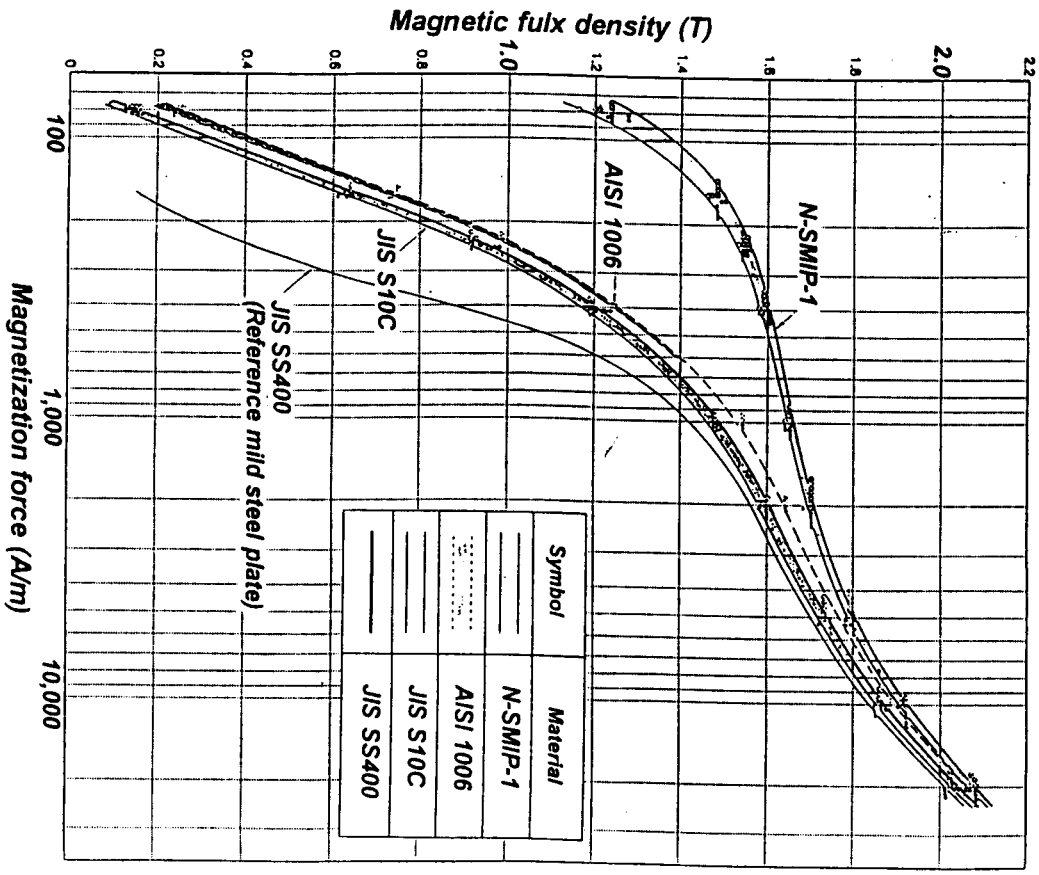

Spec. of AISI 1006 equiv.

■ Mechanical properties:

Yield point (σs) ≧ 14 kg/mm^2

Tensile strength (σB) ≧ 26 kg/mm^2

Elongation (ε) ≧ 35 %

■ Comparison with others :

	Material	Yield Point (kg/mm sq.)	Tensile strength (kg/mm sq.)	Elongation (%)
A	JIS S10C	≧ 16	≧ 30	≧ 30
	(AISI 1010)	21-32	36-41	40-46
B	AISI 1006	≧ 14	≧ 26	≧ 35
		23	32	47
C	N-SMIP-1	(≧ 10)	(≧ 23)	(≧ 45)
	(JIS SUYP-1)	15-18	25-30	54-60

In-house assembly flow

1) Lower plate installation
2) Back plate erection *
3) Bottom lampshade panel mount
4) Piston installation *
5) Coil installation *
6) Fin added *
7) Teacup mount
8) Top lampshade panel added
9) Complete MMS system

In-house assembly flow

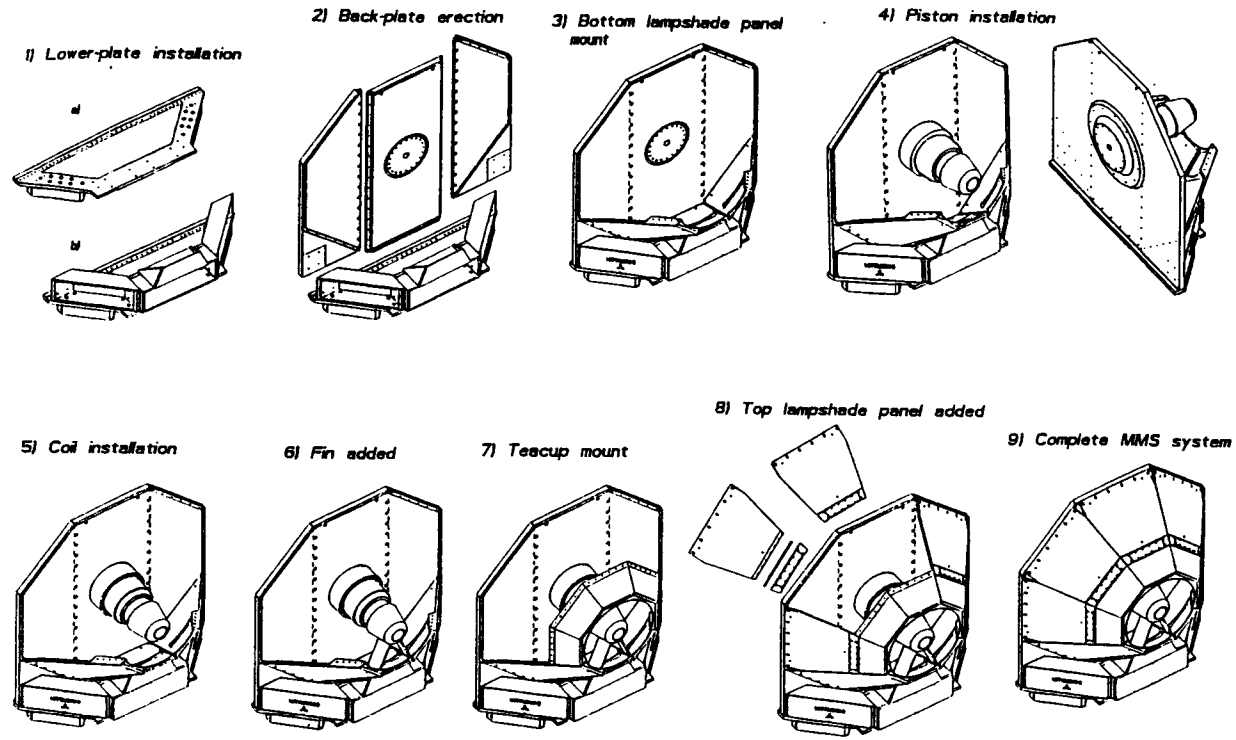

MITSUBISHI ELECTRIC CORPORATION

In-house assembly flow

- **Back plate erection**
  - *Lifting tool*
    - ○ *Shackle + Eyebolt (M72)* × *Special Shackle*
  - *Standard for screw thread of lifting tool*
    - ○ *Unified (for eyebolts)* × *ISO metric*
- **Piston installation**
  - *When to install*

In-house assembly flow

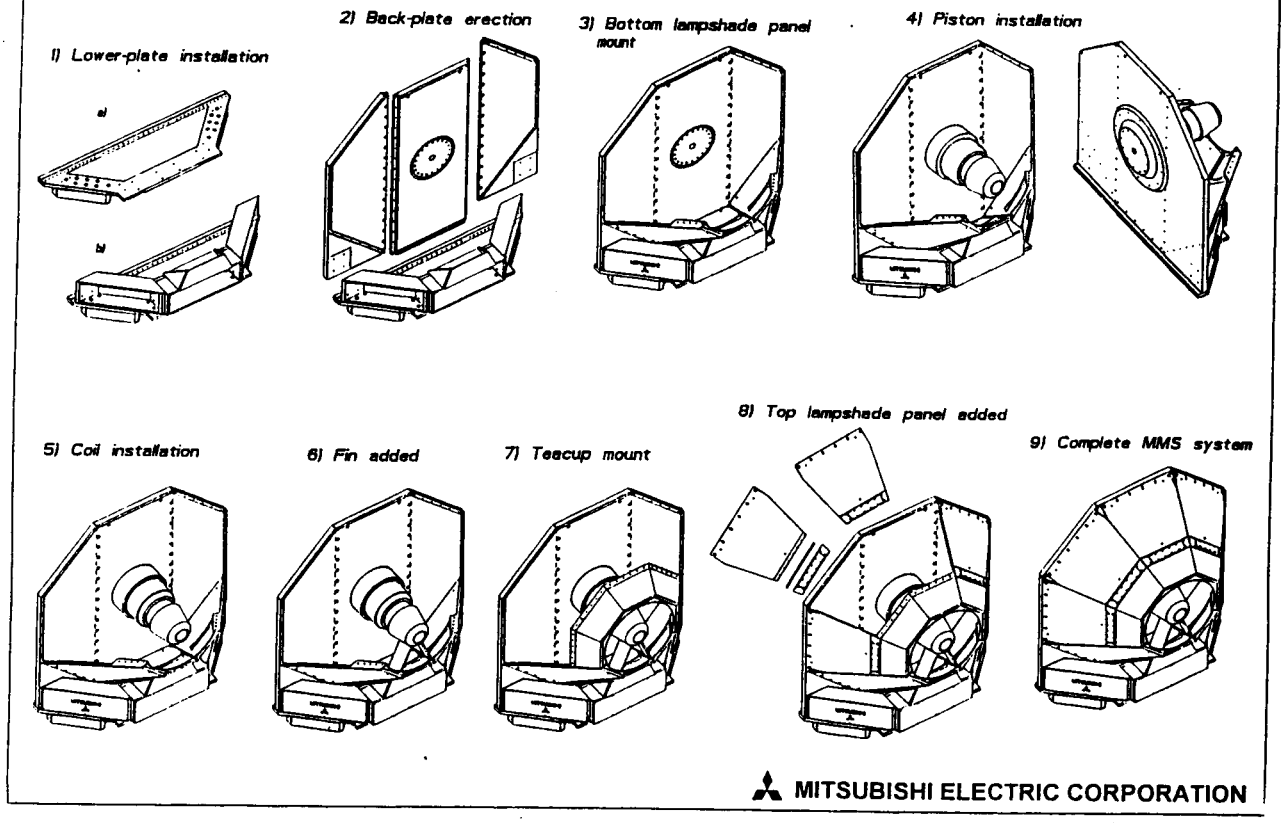

MITSUBISHI ELECTRIC CORPORATION

In-house assembly flow

- **Back plate erection**
  - *Lifting tool*
    - ○ *Shackle + Eyebolt (M72)* × *Special Shackle*
  - *Standard for screw thread of lifting tool*
    - ○ *Unified (for eyebolts)* × *ISO metric*
- **Piston installation**
  - *When to install*
    - ○ *Before fin added with coils* × *After ...*
  - *How to lift*
    - ○ *Nylon sling or wire* × *Special jig*

MITSUBISHI ELECTRIC CORPORATION

Damage of threads

- The damaging stress of threads, σv is well fitted to the condition given by

  $\sigma v = (\sigma^2+3 \times \tau^2)^{0.5} > \sigma s$ (1)

  where σ : tensile stress due to bolting

  τ : shear stress due to bolting

  σs : yield point of the bolt material.
- For the metric coarse screw thread, the equation (1) can be

  $\sigma v = 1.3 \times \sigma$ (2)
- Thus threads will be damaged at the condition given by

  $\sigma > 0.77 \times \sigma s$ (3)
- Therefore for bolting (preloading) we adopt the in-house standard, tensile stress due to bolting at the standard torque, σf given by

  $\sigma f = 0.65 \times \sigma s$ (4)

Statical analysis

- The possible maximum bolt loading onto the connection between the lower plate and the back plate were computed by using FEM code, ANSYS.

  For gravity loading condition, without fins, teacup and the upper lampshade panels

  Maximum axial loading : 65.2×10^3 (kgf/bolt)

  The above loading is smaller than the loading for seismic conditions, so that the strength of the connection is enough to assemble the coils after the piston installation without fins.

Design summary

- Coil is made up of two individual solenoidal coils.
  - a small (front) coil and a large (rear) coil
- Coils are identical except for:
  - overall diameters
  - turn formation and number of layers
  - detail of bus flags
- Coils are:
  - made from square (18.5 x 18.5 - ϕ11.5) hollow copper conductor
  - quadrufilar wound
  - cooled in parallel (each layer and each wound of coil cooled individually)
  - Epoxy pre-preged

Design changes since PDR

- Diameter (inside)
  - Front coil : 1406.6 mm → 1413 mm
  - Rear coil : 1610.6 mm → 1617 mm
- Turn formation of rear coil
  - Rectangular → Trapezoidal

    Outer double layer : 57 turns → 55 turns

    Inner double layer : 57 turns → 59 turns

  - For ease of fabrication and to keep within 12 deg zone

Design parameters

Item	Design Value		
	Front Coil	Rear Coil	
		Inner Coil	Outer Coil
AT	131100 AT	135700 AT	126500 AT
Current	2300 A	2300 A	2300 A
Number of Turns	57 turn/coil	59 turn/coil	55 turn/coil
Inner Diameter	ϕ1413.0 mm	ϕ1617.0 mm	———
Outer Diameter	ϕ1499.4 mm	———	ϕ1787.4 mm
Coil Length	586 mm	606 mm	567 mm
Conductor Cross Section	18.5 x 18.5 - ϕ11.5	18.5 x 18.5 - ϕ11.5	18.5 x 18.5 - ϕ11.5
Conductor Material	Oxygen Free Copper	Oxygen Free Copper	Oxygen Free Copper
Resistance (at 20 deg C)	19.0 mΩ	22.4 mΩ	22.0 mΩ
Operating Voltage	44.4 V	52.6 V	51.5 V
Operating Joule Loss	102.1kW	121.0 kW	118.5 kW
No. of Water Circuits	8	8	8
Water Flow Rate	178.6l/min	167.4 l/min	163.9 l/min
Water Temperature Rise	8.1 deg C	10.2 deg C	10.2 deg C

MITSUBISHI ELECTRIC CORPORATION

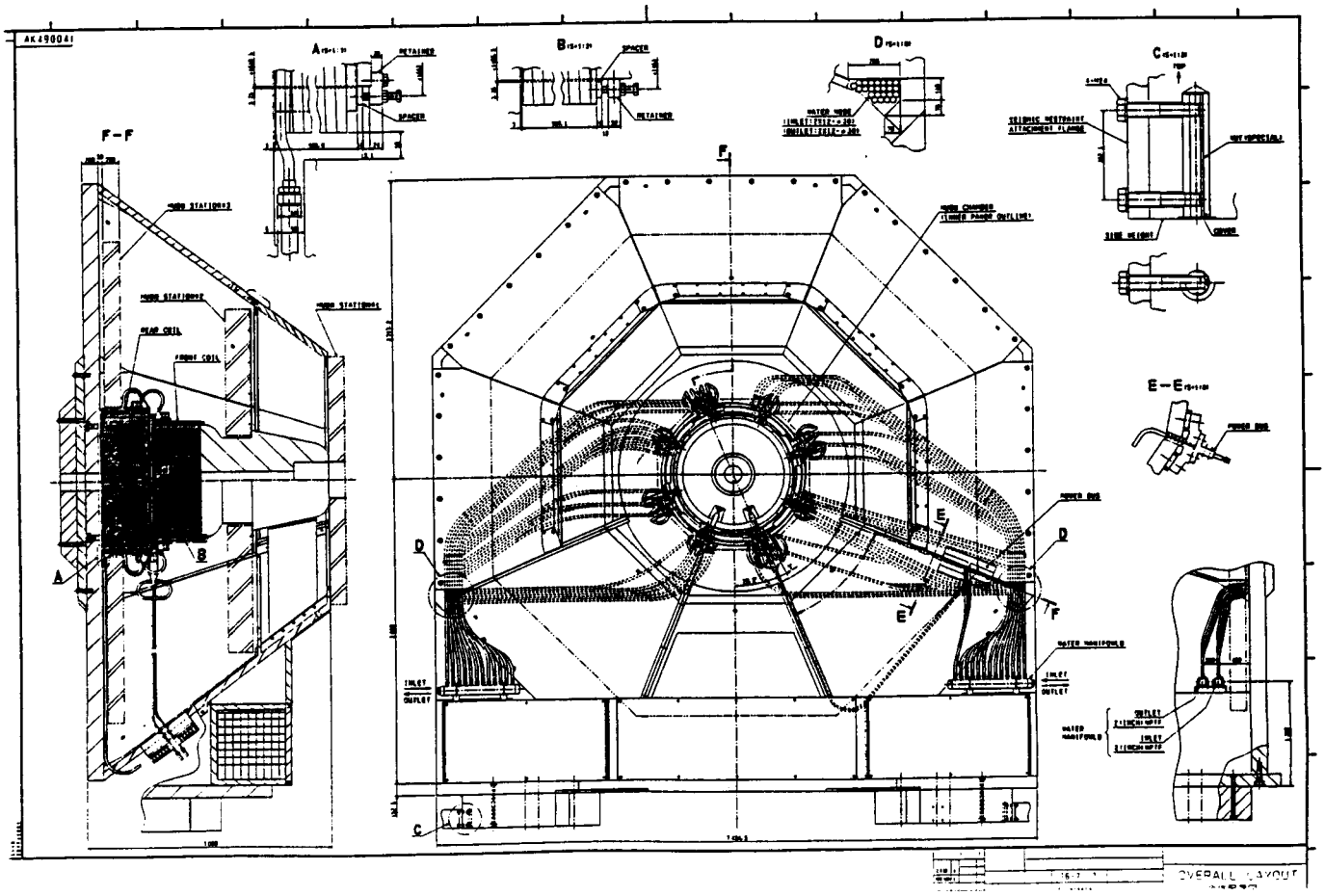

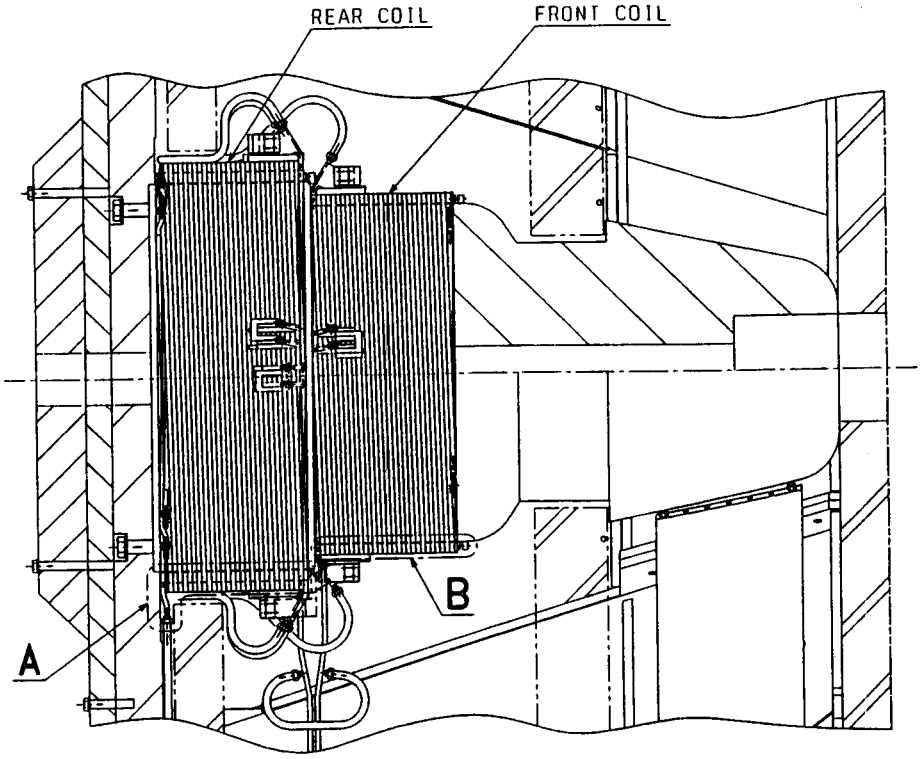
REAR COIL
FRONT COIL
A
B

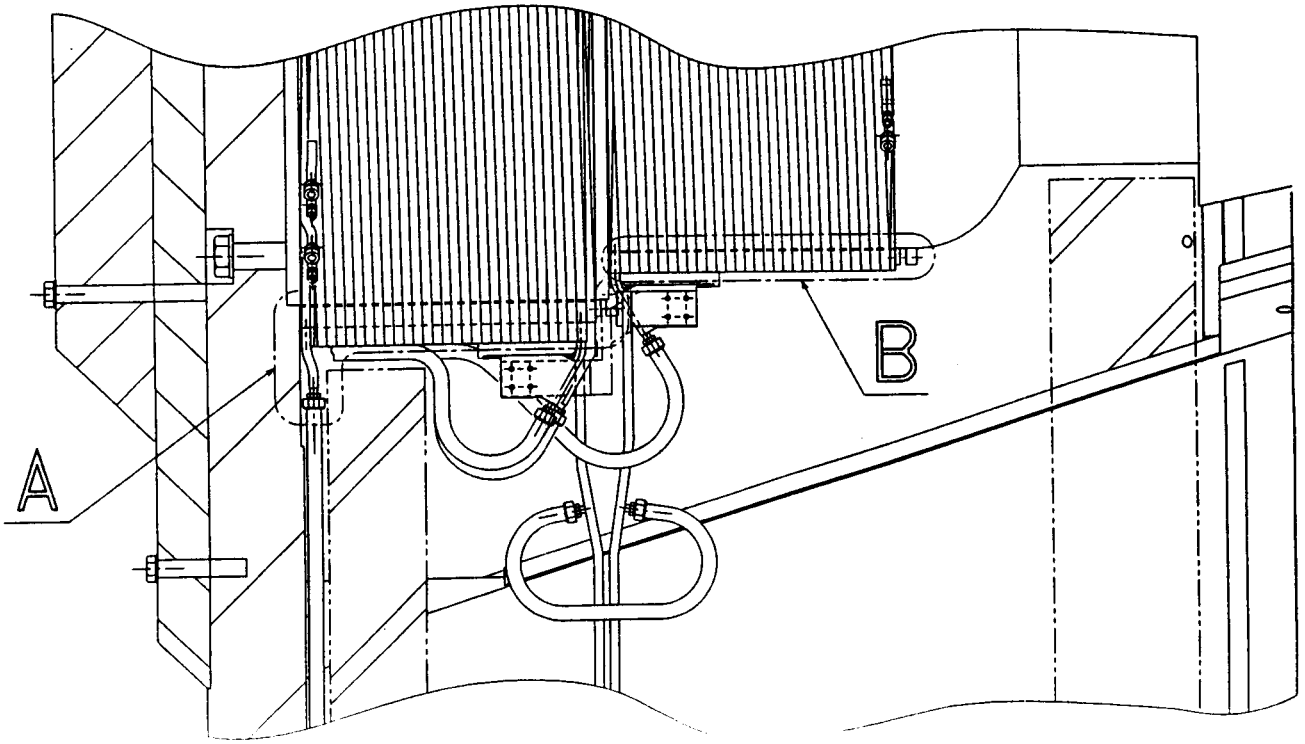
A
B