REVISIONS			
REV	DESCRIPTION	DATE	APPROVED

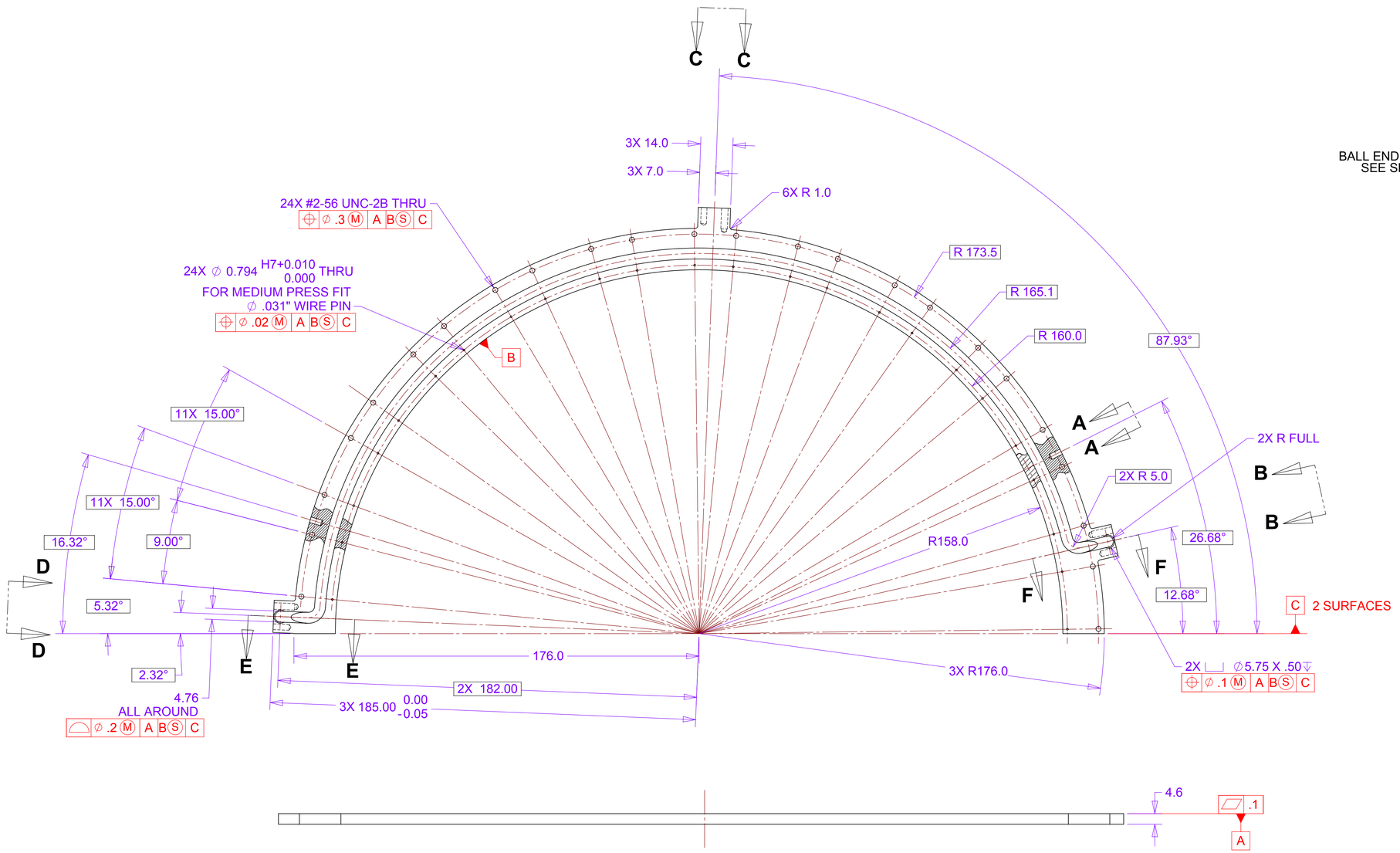

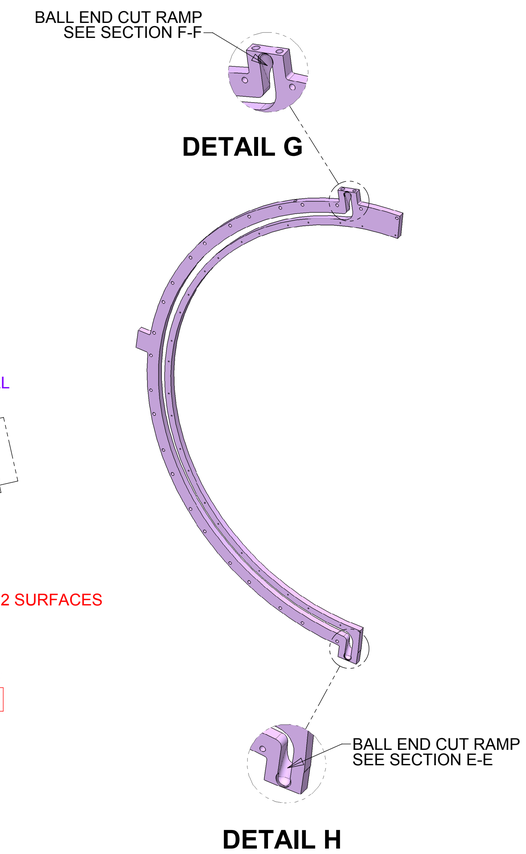

MATERIAL: CARBON LOADED PEEK

PRELIMINARY NOT FOR PRODUCTION

NOTES: UNLESS OTHER WISE SPECIFIED

1. ALL DIMENSIONS IN MILLIMETERS
2. DIMENSIONS AND TOLERANCING PER ASME Y14.5M-1994
3. PART NUMBER (DRAWING NO., DASH NO., REVISION NO., SERIAL NO.) TO BE CLEARLY MARKED ON THE PACKAGING BAG OR PART ITSELF.

THIS DOCUMENT CONTAINS INFORMATION THAT IS THE PROPRIETARY PROPERTY OF HYTEC, INC. REPRODUCTION, DISCLOSURE, OR RELEASE TO OTHERS, MANUALLY OR ELECTRONICALLY, IS STRICTLY PROHIBITED WITHOUT THE PRIOR WRITTEN CONSENT OF HYTEC, INC.

THIRD ANGLE PROJECTION

UNLESS OTHERWISE SPECIFIED:
DIMENSIONS ARE IN MILLIMETERS
-TOLERANCES-

DECIMALS
.X = +/- .5
.X = +/- .1
.XX = +/- .01
.XXX = +/- .001

ANGULAR
.X = +/- 30'
.XX = +/- 15'

SURFACE FINISH = 250

FINISH

PART NO. 111-PHX-02-3904-1

CAD GENERATED DRAWING,
DO NOT MANUALLY UPDATE
DO NOT SCALE DRAWING

	SIGNATURE	DATE
Designer	Roger L. Smith	3/10/2010
Drawn	Roger L. Smith	3/10/2010
Checked		
Engineer	RJ Ponchione	3/10/2010
Approved		

HYTEC, INC

TITLE
PHENIX CENTRAL UPGRADE
FVTX HALF STATION 2,3,4
SUPPORT PANEL OUTER CORE

DWG. NO. 111-PHX-02-3904 SIZE D SHEET NO. 1 of 2

SCALE 1:1 REVISION

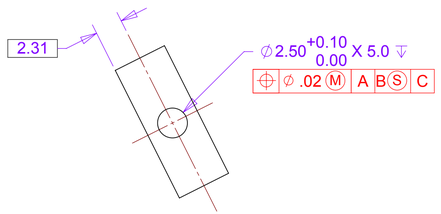

SECTION A-A
2X

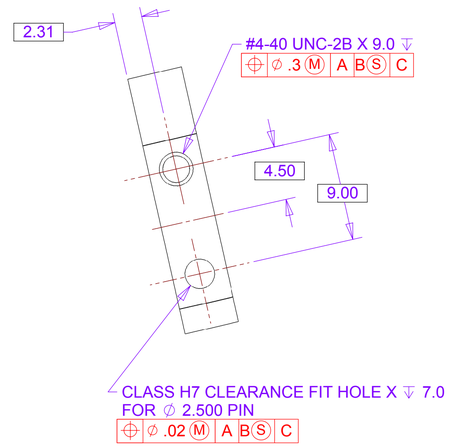

SECTION B-B

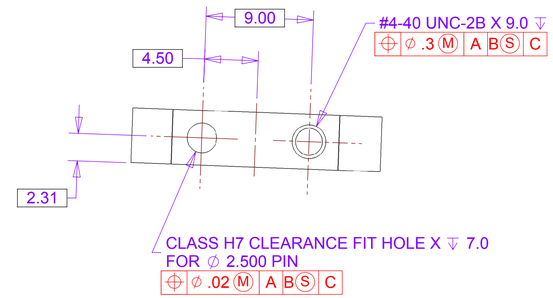

SECTION C-C

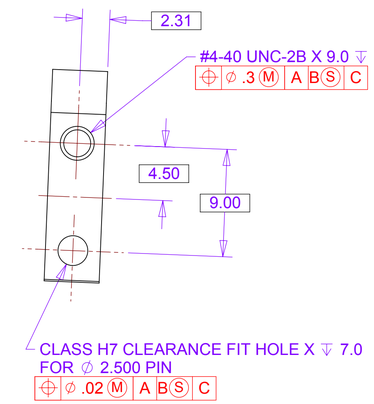

SECTION D-D

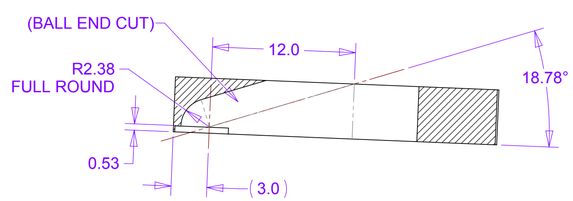

SECTION E-E

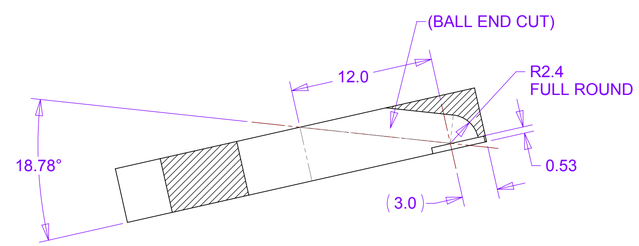

SECTION F-F

PRELIMINARY
NOT FOR
PRODUCTION

THIS DOCUMENT CONTAINS INFORMATION THAT IS THE PROPRIETARY PROPERTY OF HYTEC, INC.
REPRODUCTION, DISCLOSURE, OR RELEASE TO OTHERS, MANUALLY OR ELECTRONICALLY,
IS STRICTLY PROHIBITED WITHOUT THE PRIOR WRITTEN CONSENT OF HYTEC, INC.

THIRD ANGLE PROJECTION

UNLESS OTHERWISE SPECIFIED:
DIMENSIONS ARE IN INCHES
-TOLERANCES-
DECIMALS
.X = +/- .1
.XX = +/- .01
.XXX = +/- .005
ANGULAR = +/- 30'
SURFACE FINISH = 125

FINISH

PART NO.
111-PHX-02-3904-1

CAD GENERATED DRAWING,
DO NOT MANUALLY UPDATE
DO NOT SCALE DRAWING

	SIGNATURE	DATE
Designer	Roger L. Smith	3/10/2010
Drawn	Roger L. Smith	3/10/2010
Checked		
Engineer	RJ Ponchione	3/10/2010
Approved		

HYTEC, INC

TITLE
PHENIX CENTRAL UPGRADE
FVTX HALF STATION 2,3,4
SUPPORT PANEL OUTER CORE

DWG. NO. 111-PHX-02-3904
SIZE D
SHEET NO. 2 of 2
SCALE 4:1
REVISION