REVISIONS			
REV	DESCRIPTION	DATE	APPROVED

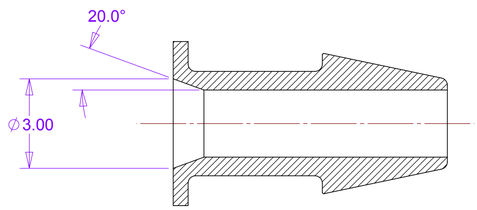

SECTION A-A
SCALE 10 : 1

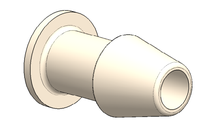

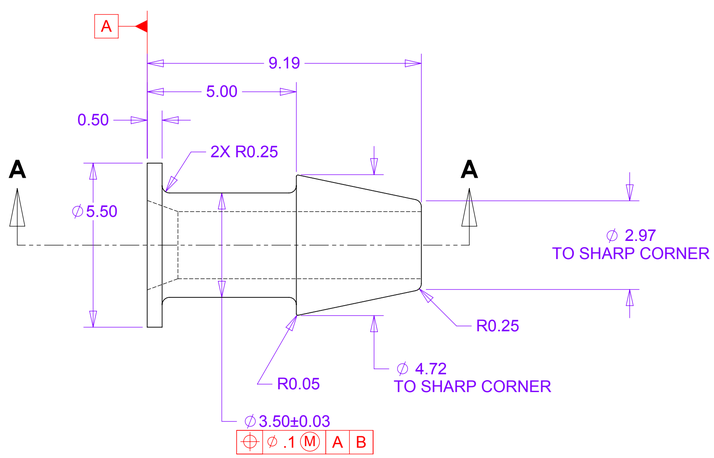

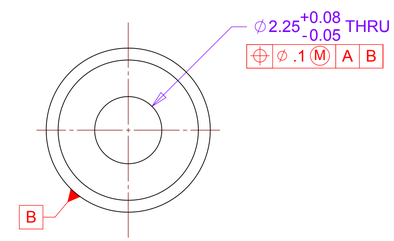

MATERIAL: PEEK

NOTES: UNLESS OTHERWISE SPECIFIED

1. ALL DIMENSIONS IN MILLIMETERS
2. DIMENSIONS AND TOLERANCING PER ASME Y14.5M-1994

PRELIMINARY NOT FOR PRODUCTION

THIRD ANGLE PROJECTION

THIS DOCUMENT CONTAINS INFORMATION THAT IS THE PROPRIETARY PROPERTY OF HYTEC, INC. REPRODUCTION, DISCLOSURE, OR RELEASE TO OTHERS, MANUALLY OR ELECTRONICALLY, IS STRICTLY PROHIBITED WITHOUT THE PRIOR WRITTEN CONSENT OF HYTEC, INC.

UNLESS OTHERWISE SPECIFIED:
DIMENSIONS ARE IN MILLIMETERS
-TOLERANCES-

DECIMALS
X = +/- .5
.X = +/- .1
.XX = +/- .01
.XXX = +/- .001

ANGULAR
.X = +/- 30'
.XX = +/- 15'

SURFACE FINISH = 250

FINISH

PART NO. 111-PHX-02-3806-1

CAD GENERATED DRAWING,
DO NOT MANUALLY UPDATE
DO NOT SCALE DRAWING

	SIGNATURE	DATE
Designer	Roger L. Smith	3/13/2010
Drawn	Roger L. Smith	3/13/2010
Checked		
Engineer	RJ Ponchione	3/13/2010
Approved		

HYTEC, INC

TITLE
PHENIX CENTRAL UPGRADE
FVTX
COOLING HOSE BARB

DWG. NO. 111-PHX-02-3806
SIZE D
SHEET NO. 1 of 1
SCALE 10:1
REVISION